

UNVEILING THE INFLUENCES ON TEACHERS' INNOVATIVE WORK BEHAVIOR IN HIGHER VOCATIONAL COLLEGES IN HEILONGJIANG PROVINCE, CHINA

Zhidi Zhang

A Thesis Submitted in Partial Fulfillment of the Requirements
for the Degree of Doctor of Philosophy
Program in Management
Rattanakosin International College of Creative Entrepreneurship
Rajamangala University of Technology Rattanakosin
Academic Year 2026
Copyright of Rajamangala University of Technology Rattanakosin

UNVEILING THE INFLUENCES ON TEACHERS' INNOVATIVE WORK BEHAVIOR IN HIGHER VOCATIONAL COLLEGES IN HEILONGJIANG PROVINCE, CHINA

Zhidi Zhang

A Thesis Submitted in Partial Fulfillment of the Requirements
for the Degree of Doctor of Philosophy
Program in Management
Rattanakosin International College of Creative Entrepreneurship
Rajamangala University of Technology Rattanakosin
Academic Year 2026
Copyright of Rajamangala University of Technology Rattanakosin

UNVEILING THE INFLUENCES ON TEACHERS' INNOVATIVE WORK BEHAVIOR IN HIGHER VOCATIONAL COLLEGES IN HEILONGJIANG PROVINCE, CHINA

Zhidi Zhang

2026



Copyright Consent Letter of Thesis/Independent Study between the Student and Rajamangala University of Technology Rattanakosin

At Rajamangala University of Technology Rattanakosin
96 Moo 3, Phutthamonthon Sai 5 Road, Salaya
Subdistrict Phutthamonthon District,
Nakhon Pathom Province 73170

Date 12 March 2026

I, ~~Mr.~~/~~Mrs.~~/Miss Zhidi Zhang Student ID 1661110381105, am a student of the Faculty/College of Rattanakosin International College of Creative Entrepreneurship in the Program of Doctor of Philosophy Major: Management Plan Thesis

agree to grant the copyright and other related information in the approved thesis/ independent study under the following topic

Title of Thesis/Independent Study

Thai

English Unveiling the Influences on Teachers' Innovative Work Behavior in Higher Vocational Colleges in Heilongjiang Province, China

I agree to grant such rights to Rajamangala University of Technology Rattanakosin for the full term of protection as provided under relevant intellectual property laws.

Signature Student
(Miss Zhidi Zhang)

Signature Advisor
(Assistant Professor Dr. Jirawan Deeprasert)

Signature Director
(Dr. Nuttapong Jotikasthira)



Thesis Certificate
Rattanakosin International College of Creative Entrepreneurship
Rajamangala University of Technology Rattanakosin

Thesis of Title	Unveiling the Influences on Teachers' Innovative Work Behavior in Higher Vocational Colleges in Heilongjiang Province, China
Researcher	Miss Zhidi Zhang
Degree Sought	Doctor of Philosophy Program in Management (International Program)

Thesis Advisors

1. Assistant Professor Jirawan Deeprasert, Ed.D.
2. Lina Li, Ph.D.

Rattanakosin International College of Creative Entrepreneurship, Rajamangala University of Technology Rattanakosin Approved this Thesis in Partial fulfillment of the Requirements for the Degree of Doctor of Philosophy

..... Director
(Dr. Nuttapong Jotikasthira)

Thesis Committee

..... Chairperson
(Professor Dr. Kornchai Phornlaphatrachakorn)

..... Member
(Associate Professor Dr. Kittiphod Charoontham)

..... Member
(Assistant Professor Dr. Uraphen Yimprasert)

..... Member and Co-advisor
(Dr. Lina Li)

..... Member and Advisor
(Assistant Professor Dr. Jirawan Deeprasert)

Title of Thesis Unveiling the Influences on Teachers' Innovative Work Behavior in Higher Vocational Colleges in Heilongjiang Province, China
Researcher: Miss Zhidi Zhang, (M.Sc.); **Degree:** Doctor of Philosophy (Management);
Advisors: Jirawan Deeprasert, (Ed.D.), Assistant Professor; and Lina Li, (Ph.D.), Instructor;
Academic Year: 2026

ABSTRACT

The objectives of this study were (1) to examine the influence of technostress, role overload, resilience, career future time perspective, and innovation climate on teachers' innovative work behavior (IWB) in higher vocational colleges, and (2) to verify the mediating roles of emotional exhaustion and intrinsic motivation in the relationships between technostress, role overload, resilience, career future time perspective, innovation climate, and teachers' IWB in higher vocational colleges.

This study was guided by the job demands-resources (JD-R) model and the conservation of resources (COR) theory and adopted a quantitative research design. A cross-sectional survey using convenience sampling was conducted among 581 teachers from higher vocational colleges in Heilongjiang Province, China. Data were analyzed by using licensed versions of SPSS Statistics 26.0 and AMOS 26.0. Structural equation modeling (SEM) was employed for hypothesis testing, and the bootstrap method was used to investigate mediating effects.

Major findings: (1) On the issue of the direct effects on IWB, the results showed that technostress and role overload function primarily as hindrance stressors, exerting direct negative effects on teachers' IWB and increasing their emotional exhaustion; while, resilience, career future time perspective and innovation climate acted as key resources that enhanced teachers' intrinsic motivation and promoted their IWB; and (2) On the issue of the mediating roles, emotional exhaustion partially mediated the effects of technostress, role overload, resilience, and career future time perspective on IWB, whereas intrinsic motivation partially mediated the effects of resilience, career future time perspective, innovation climate, and technostress on IWB. These findings underscored the pivotal roles of technology and role-related job demands, personal cognitive and adaptive resources, and organizational support in fostering teachers' IWB, offering both theoretical insights and practical guidance for promoting innovation in higher vocational education.

Keywords: Technostress, Role overload, Resilience, Career future time perspective, Innovation climate, Emotional exhaustion, Innovative work behavior

Advisor's Signature .....

Acknowledgments

As I approach the completion of my doctoral journey, I would like to express my heartfelt gratitude to all those who have supported and guided me throughout this process.

First and foremost, I would like to extend my deepest appreciation to my advisor, Assistant Professor Dr. Jirawan Deeprasert. Her profound expertise, guidance, and unwavering support have been instrumental in shaping my study and academic development. Her patience and commitment to excellence have not only helped refine my thesis but also greatly contributed to my personal and intellectual growth. The way she consistently provided insightful feedback, encouraged me to push boundaries, and helped me navigate complex research challenges has left an indelible mark on my academic journey. I am incredibly fortunate to have had her as my advisor, and I am confident that the lessons I've learned under her mentorship will continue to influence my future endeavors.

I would also like to express my deepest gratitude to my co-advisor, Dr. Lina Li. Her multidisciplinary insights and invaluable feedback have been pivotal in shaping the broader perspective of my study. Her critical thinking and attention to detail have pushed me to elevate my work, and her continuous encouragement has kept me motivated even during the most challenging phases of this journey. I am truly thankful for her guidance and the wisdom she has shared with me, both academically and personally. Her mentorship has been indispensable in this process, and I am honored to have worked with her.

I also owe a great deal of thanks to the faculty and staff of Rajamangala University of Technology Rattanakosin, especially Rattanakosin International College of Creative Entrepreneurship, for creating a dynamic academic environment. The resources, state-of-the-art facilities, and collaborative atmosphere have been crucial in supporting my study and academic growth. I am particularly grateful to all the professors and my fellow doctoral candidates who have played a key role in my development.

Lastly, I would like to thank my family for their unwavering love, support, and belief in me. Their sacrifices have made my academic journey possible, and I am forever grateful for their constant encouragement and support. Also I would like to thank myself for the perseverance, hard work, and commitment I have shown throughout this journey. The challenges I faced were numerous, but my resolve to learn and grow helped me

overcome them. I look forward to carrying these lessons with me as I continue on my academic and professional path.

Zhidi Zhang

February 2026



Table of Contents

	Page
Abstract	(1)
Acknowledgments	(2)
Table of Contents	(4)
List of Tables	(9)
List of Figures	(11)
List of Abbreviation and Glossary	(12)
Chapter 1 Introduction.....	1
1.1 Research Background	1
1.2 Significance of the Study	10
1.2.1 Theoretical Significance	10
1.2.2 Practical Significance	12
1.3 Statement of Research Questions	15
1.4 Statement of Research Objectives	15
1.5 Methodology	15
1.6 Definitions of Terms	16
1.6.1 Technostress	16
1.6.2 Role Overload	17
1.6.3 Resilience	19
1.6.4 Career Future Time Perspective	20
1.6.5 Innovation Climate	21
1.6.6 Emotional Exhaustion	21
1.6.7 Intrinsic Motivation	22
1.6.8 Innovative Work Behavior	23
1.7 Delimitation of the Thesis	24
1.8 Outline of the Thesis	26
1.9 Conclusion	27
Chapter 2 Literature Review	29
2.1 Contexts of the Study	29
2.1.1 Impact of Emerging Technological Change on Vocational Education	29
2.1.2 The Importance of Teachers' Innovative Work Behavior in Vocational Education	31

Table of Contents (continued)

	Page
2.1.3 Context of Higher Vocational Education in China	31
2.1.4 Current Status of Teachers' Innovative Work Behavior in Chinese Higher Vocational Education	33
2.1.5 Challenges in Teachers' Innovation in Chinese Higher Vocational Education	34
2.1.6 Research Value of Teachers in Higher Vocational Colleges in Heilongjiang Province	37
2.2 Parent Disciplines	38
2.2.1 Job Demands-Resources Model	38
2.2.2 Conservation of Resources Theory	42
2.3 Immediate Disciplines	46
2.3.1 Technostress	46
2.3.2 Role Overload	49
2.3.3 Resilience	50
2.3.4 Career Future Time Perspective	52
2.3.5 Innovation Climate	53
2.3.6 Emotional Exhaustion	54
2.3.7 Intrinsic Motivation	55
2.3.8 Innovative Work Behavior	56
2.4 Conceptual Model and Hypothesis Development	59
2.4.1 Conceptual Model	59
2.4.2 Hypothesis Development	60
2.5 Conclusion	90
Chapter 3 Methodology	92
3.1 Overview and Justification of Research Paradigm	92
3.1.1 Positivism	95
3.1.2 Constructivism	97
3.1.3 Critical Theory	98
3.1.4 Paradigm in this Study	99
3.2 Methodology	99
3.2.1 Research Design	100
3.2.2 Major Data Collection Method	100
3.2.3 Measurement Scales	101

Table of Contents (continued)

		Page
	3.2.4 Reliability and Validity Issues of the Scales	114
	3.2.5 Pilot Study	114
	3.3 Data Collection Administration	118
	3.3.1 Target Population	118
	3.3.2 Sampling Method	120
	3.3.3 Sample Size	124
	3.3.4 Data Collection Method	125
	3.4 Data Analysis	126
	3.4.1 Data Cleaning	126
	3.4.2 Statistical and Data Interpretation Method	127
	3.5 Ethical Considerations	130
	3.5.1 Informed Consent	131
	3.5.2 Confidentiality and Data Protection	131
	3.5.3 Non-Maleficence and Psychological Well-Being	131
	3.5.4 Fair Representation and Avoidance of Bias	132
	3.5.5 Data Integrity and Avoiding Manipulation	132
	3.5.6 Institutional Review Board (IRB) Approval	133
	3.5.7 Transparency and Open Science Practices	133
	3.6 Conclusion	133
Chapter 4	Results	134
	4.1 Descriptive Statistics of Respondents	134
	4.2 Descriptive Statistics of Observed Variables	136
	4.3 Confirmatory Factor Analysis and Measurement Model Evaluation	139
	4.3.1 Confirmatory Factor Analysis Model of Technostress	139
	4.3.2 Confirmatory Factor Analysis Model of Role Overload	141
	4.3.3 Confirmatory Factor Analysis Model of Resilience	143
	4.3.4 Confirmatory Factor Analysis Model of Career Future Time Perspective	145
	4.3.5 Confirmatory Factor Analysis Model of Innovation Climate	146
	4.3.6 Confirmatory Factor Analysis Model of Emotional Exhaustion	147

Table of Contents (continued)

		Page
	4.3.7 Confirmatory Factor Analysis Model of Intrinsic Motivation	149
	4.3.8 Confirmatory Factor Analysis Model of Innovative Work Behavior	151
	4.3.9 Confirmatory Factor Analysis Model of Overall Measurement Model	153
	4.3.10 Correlation Analysis and Discrimination Validity	157
	4.3.11 Common Method Bias Test	159
	4.4 Test of Hypotheses	160
	4.4.1 Model Fit	160
	4.4.2 Direct Effects	161
	4.4.3 Indirect Effects	164
	4.5 Conclusion	169
Chapter 5	Discussion and Conclusion	171
	5.1 Discussion of the Main Hypotheses	171
	5.1.1 The Effects of Job Demands on Teachers' IWB	171
	5.1.2 The Effects of Job Resources on IWB	174
	5.1.3 The Effects of Job Demands on Emotional Exhaustion and Intrinsic Motivation	176
	5.1.4 The Effects of Job Resources on Emotional Exhaustion and Intrinsic Motivation	179
	5.1.5 The Mediating Effect of Emotional Exhaustion	185
	5.1.6 The Mediating Effect of Intrinsic Motivation	188
	5.1.7 The Effect of Technostress on Role Overload	193
	5.2 Implication to Theories	194
	5.2.1 Implications to Job Demands-Resources Model	194
	5.2.2 Implications to Conservation of Resources Theory	196
	5.3 Implication to Practitioners …	199
	5.4 Limitation of the Study and Implications of Future Research	202
	5.4.1 Limitations of the Study	202
	5.4.2 Implications of Future Research	203
	5.5 Conclusion	204

Table of Contents (continued)

	Page
Bibliography ……..	206
Appendix ……	276
Appendix A Questionnaire (English Version) ……	277
Appendix B Questionnaire (Chinese Version) ……	285
Appendix C Research Ethics Certificate ……..…	292
Appendix D Primary Data ……..……	295
Appendix E Publication of Journal during Ph.D. Study …….	297
Vitae ……..	314

List of Tables

Table		Page
2.1	Summary of Hypotheses Proposed by this Study	89
3.1	Three Basic Paradigms within the Context of Basic Components	95
3.2	Technostress Measurement Items	102
3.3	Role Overload Measurement Items	103
3.4	Resilience Measurement Items	104
3.5	Career Future Time Perspective Measurement Items	106
3.6	Innovation Climate Measurement Items	108
3.7	Emotional Exhaustion Measurement Items	110
3.8	Intrinsic Motivation Measurement Items	111
3.9	Innovative Work Behavior Measurement Items	113
3.10	Reliability Analysis of each Variable in the Pilot Test	116
3.11	KMO and Bartlett's Test of Sphericity	117
3.12	Total Variance Explained by Extracted Components	117
3.13	Summary of Rotated Component Matrix	118
3.14	The Selected Six Higher Vocational Colleges in Heilongjiang Province	122
3.15	Questionnaire Distribution Table	125
3.16	Fit Indices Categories and Acceptance Criteria	129
4.1	Descriptive Analysis of Demographics	135
4.2	Means and Normality Tests of Different Items and Dimensions	137
4.3	Model Fit Index of Technostress	140
4.4	Factor Loadings, AVE, and CR for Technostress	141
4.5	Model Fit Index of Role Overload	142
4.6	Factor Loadings, AVE, and CR for Role Overload	143
4.7	Model Fit Index of Resilience	144
4.8	Factor Loadings, AVE, and CR for Resilience	144
4.9	Model Fit Index of Career Future Time Perspectives	145
4.10	Factor Loadings, AVE, and CR for Career Future Time Perspective	146
4.11	Model Fit Index of Innovation Climate	147
4.12	Factor Loadings, AVE, and CR for Innovation Climate	147
4.13	Model Fit Index of Emotional Exhaustion	148
4.14	Factor Loadings, AVE, and CR for Emotional Exhaustion	149
4.15	Model Fit Index of Intrinsic Motivation	150
4.16	Factor Loadings, AVE, and CR for Intrinsic Motivation	151

List of Tables (continued)

Table		**Page**
4.17	Model Fit Index of Innovative Work Behavior	152
4.18	Factor Loadings, AVE, and CR for Innovative Work Behavior	152
4.19	Model Fit Index of Overall Measurement Model	154
4.20	Standardized Factor Loading Table	155
4.21	Pearson Correlation and Discriminant Validity Analysis	158
4.22	Model Fit Results of Confirmatory Factor Analyses	158
4.23	Overall Model Fit Indices (SEM)	161
4.24	Standardized Direct Effects with 95% Confidence Intervals	163
4.25	Standardized Indirect and Total Effects with 95% Confidence Intervals	165
4.26	Summary of Hypothesis Test Results	167

List of Figures

Figures	Page
2.1 China's vocational education system	32
2.2 The number of higher vocational colleges and enrollments (2015-2025)	33
2.3 Theoretical model based on the JD-R model	42
2.4 Conceptual model based on the COR theory	46
2.5 Conceptual model of this study	59
3.1 Demographic distribution of higher vocational colleges in Heilongjiang Province, China	120
4.1 Confirmatory factor analysis model of technostress	140
4.2 Confirmatory factor analysis model of role overload	141
4.3 Confirmatory factor analysis model of resilience	143
4.4 Confirmatory factor analysis model of career future time perspective	145
4.5 Confirmatory factor analysis model of innovation climate	146
4.6 Confirmatory factor analysis model of emotional exhaustion	148
4.7 Confirmatory factor analysis model of intrinsic motivation	150
4.8 Confirmatory factor analysis model of innovative work behavior	151
4.9 Confirmatory factor analysis model of overall measurement model	153
4.10 Structural equation model results	160
4.11 Structural path model of the hypothesized relationships	167

List of Abbreviation and Glossary

Abbreviation / Glossary	Explanation
AI	Artificial intelligence
CFA	Confirmatory factor analyses
CFTP	Career future time perspective
COR	Conservation of resources
CMB	Common method bias
FTP	Future time perspective
IM	Intrinsic motivation
IWB	Innovative work behavior
JD-R	Job demands–resources
SEM	Structural equation model
CFA	Confirmatory factor analyses
TS	Technostress
RO	Role overload
EE	Emotional exhaustion
IC	Innovation climate
RE	Resilience
SST	Socioemotional selectivity theory
SDT	Self-determination theory
AET	Affective events theory
BIS	Behavioral inhibition system
POB	Positive organizational behavior
ICT	Information and communication technology

CHAPTER 1
INTRODUCTION

Chapter 1 provides a comprehensive overview of the study by establishing the research background, identifying existing research gaps, and clarifying the significance of the study. It also introduces the research questions and objectives that guide the overall investigation. This chapter is organized as follows. Section 1.1 presents the research background, highlighting the growing demand for innovative work behavior (IWB) among teachers in higher vocational colleges in the context of rapid technological advancement and industry transformation. This section also identifies key research gaps, emphasizing the need for further investigation into the effects of technostress, role overload, resilience, career future time perspective, innovative climate on teachers' IWB. Section 1.2 discusses the theoretical and practical significance of the study, demonstrating its contributions to both academic research and educational management practice. Subsequently, Section 1.3 outlines the research questions, and Section 1.4 specifies the corresponding research objectives. Section 1.5 describes the research methodology adopted in this study. Section 1.6 provides the operational definitions of key terms, while Section 1.7 clarifies the delimitations of the thesis. Finally, Section 1.8 presents the overall structure of the thesis, and Section 1.9 concludes the chapter by summarizing its main points and laying the foundation for the subsequent chapters.

1.1 Research Background

Globally, the rapid pace of technological revolution is reshaping the labor market, leading to increasingly complex and advanced skill demands (World Economic Forum, 2025). The widespread application of emerging technologies, such as artificial intelligence, big data, augmented reality, and virtual reality, is fundamentally transforming traditional work patterns and imposing new requirements on workers' technical skills and practical capabilities (Morandini et al., 2023). As traditional vocational skills are no longer sufficient to meet the demands of future jobs, the ability to quickly adapt to and master advanced technologies has become an essential trait for the workforce of the future (Chen

et al., 2021). In this context, higher vocational education serves as a vital bridge between education and employment. Higher vocational education must innovate to ensure that students acquire the skills necessary for the labor market of the future (Beer and Mulder, 2020).

Teachers, as the cornerstone of educational innovation, play an essential role (Wang et al., 2024). They play a pivotal role in driving innovation by identifying opportunities for improvement in teaching, integrating new technologies and methods to adapt to the rapidly evolving external environment (Cao et al., 2020; Zhou et al., 2024). If teachers actively innovate and integrate emerging technologies into their teaching practices, students will be exposed to the latest industry trends and technological practices. For instance, using virtual reality technology in construction courses for simulating roof maintenance checks allows students to practice diagnostics and risk identification (Panisoara et al., 2020). This immersive experience provides real-world vocational skills training, enabling students to gain practical experience before entering the workforce. Conversely, if teachers lack an innovative mindset and continue to rely on outdated teaching methods and content, students may miss critical opportunities to master emerging technologies and may struggle to adapt to the rapidly evolving demands of modern industries (Spött et al., 2021). This disconnect directly impacts students' career prospects and undermines the effectiveness of higher vocational education in cultivating talent that meets industry demands (Xu et al., 2024). Therefore, fostering innovative work behavior among teachers in higher vocational colleges is crucial to ensure students acquire the latest skills required by the industry.

Teacher’s innovative work behavior refers to the proactive initiation and implementation of new ideas, teaching methods, and strategies within their professional roles to enhance education quality, optimize teaching processes, and drive institutional innovation (Bayram & Esra, 2025). This includes exploring and integrating new educational technologies, developing creative curriculum designs, improving assessment approaches, fostering interdisciplinary collaboration, and contributing innovative suggestions to educational policies. The IWB process typically involves several key stages. Initially, IWB encompasses opportunity recognition, whereby teachers actively observe industry trends, technological advancements, and shifts in student learning needs to identify opportunities for enhancing educational practices (Almessabi, 2022). This is

followed by idea generation, during which teachers develop innovative teaching methods in response to identified needs, such as integrating digital tools, implementing interdisciplinary teaching, or adopting work-based learning strategies (Huu, 2023). Subsequently, idea promotion comes into play, as teachers advocated for these innovations both within and beyond their institutions, securing managerial support, and influencing colleagues to adopt new teaching approaches. The final stage, idea realization, involves implementing innovative solutions in practice, continuously refining and adapting them to ensure effectiveness and sustainability (Salamah et al., 2024).

A growing body of research has examined the antecedents of teachers' IWB, identifying both facilitators and inhibitors of IWB (Messmann & Mulder, 2020). Among these, stress-related factors such as work-related stress and role stressors have attracted increasing scholarly attention in recent years (Bani-Melhem et al., 2021; Wang et al., 2022). In particular, technostress has emerged as a salient challenge in technology-intensive educational environments so that it may act as a potential inhibitor of teachers' IWB (Chandra et al., 2019; Pansini et al., 2023). The development of technology is not always positive, the negative psychological effects of technology on individuals have become an increasing focus of research. When confronted with new technologies or technological changes, individuals who perceive themselves as lacking the skills to cope with are more likely to experience stress, leading to technostress (Rohwer et al., 2022). Technostress refers to the psychological burden and difficulties individuals face when they perceive an inability to cope with new or rapidly changing technologies (Wang & Yao, 2025). When technologies are perceived as overly complex or demanding, teachers may feel overwhelmed and uncertain, which can reduce their willingness to experiment with innovative teaching practices. Particularly in higher vocational education, the rapid advancement of technology requires teachers to quickly learn and master a range of new tools, thereby placing greater demands on teacher's technical adaptability (Liu et al., 2023). Such stress can fundamentally alter teachers' work habits and teaching behaviors, which could inhibit their engagement in IWB (Califf & Brooks, 2020).

Role overload represents another important stressor that may constrain teachers' IWB (Clarke & Higgs, 2020; Huang et al., 2021; Moore et al., 2021). Role overload refers to the stress individuals experience when they are required to handle too many responsibilities or tasks while having insufficient resources (such as time and ability) to

do so (Rafique, 2023). Higher vocational teachers are required not only to fulfill teaching duties but also to take on administrative work and manage students, which increases their risk of role overload (Chen & Li, 2024). In China, particularly within the context of industry-education integration in higher vocational education, teachers are increasingly required to engage in more university-enterprise joint programs, to supervise students during internships, and provide career guidance, all of which further add to their role demands (Liu et al., 2018). As a source of role stress, role overload leads to the depletion of an individual's psychological and emotional resources (Apenteng et al., 2022; Malik & Siddiqui, 2022; Huang et al., 2021). This depletion can weaken their ability and motivation to participate in innovative activities (Apenteng et al., 2022), which can inhibit teachers' IWB in higher vocational colleges.

In this context, resilience, as a critical personal resource, may be an important factor in fostering teachers' IWB (Moore et al., 2021). Resilience refers to an individual's ability to recover quickly and maintain a positive attitude when faced with stress, setbacks, or failure (Pahwa & Khan, 2022). More specifically, teacher's resilience is conceptualized as teacher's capacity to adapt to diverse environments and enhance their competence in the face of difficulties (Reddy & Chan, 2022). Previous research has shown that resilience not only mitigates teacher's work-related stress (El-Sayed, 2022; Li, 2023), but also enables them to approach complex tasks with adaptability and openness to new ideas and methods (Lee et al., 2021). Resilient teachers require fewer resources to cope with stress and difficulties, which increases their likelihood of engaging in IWB despite facing challenges. Therefore, resilience emerges as a potentially key factor in fostering teachers' IWB, especially when facing multiple sources of work-related stress.

Additionally, career future time perspective is another potential personal resource that may influence teachers' IWB. Career future time perspective refers to an individual's perception of their future career and the extent to which they align their current behaviors with long-term career goals and aspirations (Hai & Park, 2024). From a theoretical standpoint, it serves as a psychological resource that facilitates the alignment of current behaviors with future goals. When teachers perceive a strong connection between their current work and future success, they are more likely to allocate cognitive resources, time, and emotional energy towards innovation, rather than focusing on routine tasks (Abubakar et al., 2019). Individuals with strong future time perspective are more inclined to plan and

develop their careers from a long-term perspective, which enhances their sense of purpose and intrinsic motivation (Axelrad et al., 2022). When teachers see a positive trajectory for their career development and feel they have the time and opportunities for professional growth, they typically view their current efforts as investments in future career advancement (Chaaban et al., 2023). As a result, they are more likely to engage in proactive behaviors, thereby promoting their IWB.

Moreover, innovation climate, as an organizational resource, plays a critical role in promoting teachers' IWB by providing the external support for innovation (Kundu & Roy, 2023). Innovation climate refers to the extent to which an organization fosters and encourages innovation (Ye et al., 2022). Previous studies have shown that a supportive innovation climate can significantly enhance individual's IWB by providing resources, encouraging autonomy, fostering teamwork, and tolerating failure (Lecic et al., 2023). Such an environment encourages teachers to explore and experiment with innovative teaching methods and tools (Du & Chang, 2023). Thus, innovation climate serves as a key organizational resource to inspire teachers' willingness to innovate, acting as a driving force for fostering IWB.

Based on the above discussion, several critical research gaps can be identified. First, while previous studies have explored the role of job stressors in IWB, most have focused on traditional work-related stressors such as time pressure, workload, and task variety, with relatively less attention paid to the impact of technostress and role overload on IWB. Technostress, a critical challenge in digital education (Pansini et al., 2023), has been found to have limited and inconsistent empirical results regarding its effects on IWB. Some studies suggested that technostress hinder innovation and creativity (Hessari et al., 2024; Zhang, 2023), while others indicated a potential non-linear relationship where moderate technostress stimulates innovation, whereas excessive stress impedes it (Panisoara et al., 2020; Chandra et al., 2019). Furthermore, some researchers also argued that some technostressors have no direct impact on IWB (Hurbean et al., 2022). Thus, the relationship between technostress and IWB remains unclear. Moreover, how technostress influences IWB through mechanisms such as emotional exhaustion and intrinsic motivation remains an underexplored area. This study will contribute to filling this gap by examining how technostress affect IWB among higher vocational teachers, while also identifying the mediating mechanisms at play.

Secondly, role overload, which is also considered a job stressor for educators (Moore et al., 2021), has not been fully explored in its relationship with IWB. Existing studies provide mixed findings, with some suggesting that role overload may act as a challenging stressor (Lin & Ling, 2018; Chung et al., 2022), while others proposed that it may serve as a hindering stressor by depleting emotional resources and suppressing innovative work behavior (Tang & Vandenberghe, 2021; Clarke & Higgs, 2020). Therefore, a theoretical gap exists in understanding the relationship between role overload and IWB, especially in the context of higher vocational teachers. Moreover, how role overload influences IWB through mechanisms such as emotional exhaustion and intrinsic motivation remains an underexplored area. This study seeks to contribute to the literature by examining how role overload influences IWB among higher vocational teachers and identifying the mediating mechanisms that drive this relationship.

Thirdly, while many studies have explored positive effects of various job resources on IWB, there is a lack of empirical research on how time perception serves as a psychological resource influencing IWB (Hai & Park, 2024). Previous research on future time perception has linked it to various positive work-related outcomes, such as work engagement (Kooij et al., 2017), job satisfaction (Bajec, 2018), organizational citizenship behavior (Weikamp & Göritz, 2016), and creativity (Collier, 2022). However, empirical studies on the impact of career future time perspective on IWB remains scarce. Career future time perspective is conceptualized as a future-oriented cognitive resource that shapes individuals' career-related goals, their sense of time, and how they connect their current actions to long-term professional aspirations (Jia et al., 2025; Park et al., 2021). Teachers who perceive a strong linkage between their current efforts and future career success may be more inclined to engage in innovative practices as a way of proactive shaping their career paths. To address this research gap, this study investigates how career future time perspective impacts teachers' IWB, with a focus on the underlying mechanism through which this effect occurs. This study introduce career future time perspective in the context of teachers' innovative work behavior, broadening its application in educational management and providing a fresh theoretical perspective on teachers' innovation. Furthermore, existing research has seldom explored how career future time perspective impacts IWB by activating intrinsic motivation (Ntunga, 2023). This study fills this gap by integrating career future time perspective into the JD-R model, highlighting its role as

a future-oriented cognitive resource, and demonstrating how it enhances intrinsic motivation and reduces emotional exhaustion under work pressure to promote innovative work behaviors among teachers.

Fourth, resilience is considered a critical personal resource (Shi et al., 2023), defined as an individual's ability to maintain a positive coping attitude and recover from adversity and stress. Resilience has increasingly been recognized as an important psychological resource that may influence IWB (Caniëls et al., 2022; Nassani et al., 2024). Given the nature of the teaching profession—high emotional labor, cognitive demands, and ongoing change (Gu, 2018), resilience may be particularly salient in helping vocational college teachers sustain innovation efforts over time. Previous empirical studies on the role of resilience in shaping teachers' IWB remain scarce. Prior studies have predominantly emphasized its stress-buffering function, with limited exploration of its proactive role in fostering innovative work behavior (Caniëls et al., 2022; Nassani et al., 2024). This study contributes by framing resilience not as a stress buffer, but as a proactive driving force that enables teachers to engage in IWB. Additionally, there is a notable lack of empirical studies examining the relationship between resilience and intrinsic motivation, an area that presents a significant opportunity for future research (Li et al., 2023). This study aims to address these gaps by exploring how resilience influences IWB both directly and indirectly through intrinsic motivation.

Moreover, few studies have integrated job demands, personal resources, and organizational resources within a unified theoretical framework to systematically examine their joint effects on teachers' IWB. Although IWB is critical for enabling vocational teachers to adapt to rapid technological change and evolving labor market demands, empirical research focusing on this population remains scarce (Kong & Wang, 2024). Existing studies have predominantly examined IWB in general organizational contexts or other educational settings, such as higher education institutions or K-12 education.

Therefore, this study aims to address these research gaps in the existing literature by examining the impact of job demands (technostress and role overload) and job resources (resilience, future career time perspective, and innovative climate) on IWB. This study adopts the Job Demands-Resources (JD-R) model and Conservation of Resources (COR) theory as theoretical foundation to systematically examine how these key factors influence higher vocational college teachers' IWB. The JD-R model provides a dual-

process framework, in which job demands lead to strain and reduced outcomes through the health impairment process, while job resources enhance motivation and improve outcomes via the motivational process (Collie, 2023; Bakker et al., 2023). Applying this framework, this study examines how technostress and role overload, as job demands, may trigger the health impairment process, leading to emotional exhaustion and ultimately diminishing IWB. Through the motivational process, this study investigates whether resilience, career future time perspective, innovation climate, as job resources, enhance intrinsic motivation, which in turn fosters teachers' IWB.

To complement this perspective, this study also applied COR theory to explain the direct effects of these key factors on IWB, which JD-R model does not fully address. COR theory provides a resource-based perspective, explaining how teachers manage and invest their resources over time (Lackey et al., 2025). COR theory posits that individuals have a tendency to strive for acquiring, maintaining, cultivating, and protecting resources they perceive as valuable (Lin, 2023). Innovative work behavior is inherently resource-intensive, requiring sustained cognitive and emotional investment (Zhang & Chin, 2024). Therefore, teachers experiencing persistent technostress or excessive workload may undergo continuous resource depletion. As a result, they are more likely to maintain and protect their existing resources such as time and energy, so that to prioritize routine teaching tasks over creative efforts, ultimately suppressing IWB and potentially leading to resource loss (Fajri & Agbo, 2024). Conversely, resilience, as a key personal resource, helps buffer against resource depletion, enabling teachers to cope with challenges, reinvest energy, and sustain innovation despite adversity (Wang et al., 2025; Hur & Moon, 2024). In addition, career future time perspective enables teachers to visualize long-term professional growth and goal attainment, which motivates them to invest in innovative work behaviors as a means of accumulating valued future resources (Xie et al., 2024). Furthermore, at the organizational level, an innovation climate facilitates resource accumulation, providing institutional support, autonomy, and a tolerance for failure, thereby enhancing long-term IWB (Putra & Pramusiwi, 2023). The resource caravan principle of COR theory emphasizes that resources do not function in isolation but form self-reinforcing resource systems (Aslam et al., 2022; Park et al., 2024). Therefore, teachers with strong personal resources are better positioned to leverage organizational resources, forming a stable support system that sustains long-term engagement in IWB.

Therefore, by integrating JD-R's dual-process framework with COR's resource management perspective, this study offers a comprehensive theoretical framework to examine the key factors that influence on teachers' IWB, providing insights into sustainable strategies for fostering teachers' IWB.

This study primarily focuses on teachers' IWB in higher vocational colleges in China. In China, the relationship between higher vocational education and the labor market is particularly close. Over the past few decades, China's economy has experienced rapid growth, accompanied by structural transformation and upgrading in industries, resulting in an increasing demand for high-skilled labor (Li, 2024). Higher vocational colleges, as the core component of China's vocational education system, play a key role in cultivating high-skilled talent for emerging industries (Zhao & Li, 2021). Over the past decade, higher vocational education has contributed significantly to meeting labor market demands in China, delivering more than 61 million high-quality laborers and technical talents to society. In key fields such as modern manufacturing, strategic emerging industries, and modern services, over 70% of newly added frontline workers are graduates from higher vocational colleges (Ministry of Education of the People's Republic of China, 2023).

China's higher vocational education system is rapidly developing but faces a pressing issue: the insufficient innovation practice of higher vocational college teachers (Kong & Wang, 2024). This issue has become a major obstacle in aligning higher vocational education with the ever-changing demands of the labor market. According to Report on the Current Status of Higher Vocational Education Teachers in China (2023)—based on a survey of over 15,000 higher vocational educators across more than 20 provinces—the overall innovation outcomes of higher vocational college teachers are generally unsatisfactory, with significant room for improvement (China Education Online, 2023). Although some teachers show initiative in areas such as teaching methods, course design and research, the overall level of innovative outcomes remains relatively low (Zheng & Yu, 2021). Moreover, the curriculum in higher vocational education is slow to adapt to technological advancements, leading to a growing mismatch between students' skills and industry demands (Xu & Li, 2022). The root causes of these challenges are multifaceted, including heavy workloads, limited resources for innovation, insufficient technological support, and inadequate incentive mechanisms (Kong & Wang, 2021). These factors collectively constrain teacher's willingness and ability to engage in IWB,

further limiting the effectiveness of higher vocational education reform. Given this context, promoting IWB among higher vocational college teachers in China has become an urgent priority. Studying the factors that influence IWB is crucial in ensuring the high-quality development of higher vocational education in China.

Therefore, this study examines the factors shaping teacher's innovative work behavior (IWB) among higher vocational college teachers in China. By identifying mechanisms that foster or constrain IWB, this study offers insights to enhance teacher's innovative work behavior and align higher vocational education with evolving industry needs. The findings aim to provide theoretical insights and practical recommendations for educational administrators, policymakers, and other stakeholders to foster teachers' IWB in higher vocational colleges in China.

1.2 Significance of the Study

This study aims to enhance the theoretical understanding of the factors influencing IWB among teachers in higher vocational education. Additionally, it seeks to offer practical insights for educational administrators and other stakeholders to effectively foster teachers' IWB in teaching practices. The significance of this study lies in both its theoretical contributions and practical implications.

1.2.1 Theoretical Significance

First, this study integrates the JD-R model with the COR theory to construct a new theoretical framework for understanding the teachers' IWB in higher vocational college. The novelty of this study lies in the combination of these two perspectives. The JD-R model explains how job demands and job resources influence IWB through health impairment and motivational processes, whereas COR theory focuses on how individuals manage, conserve, and invest resources when facing stress. Specifically, the JD-R model provides a clear structural framework to identify key demands and resources and their immediate effects on IWB, while COR theory offers a resource-based explanation for why resource depletion inhibits innovation and why resource investment supports sustained innovative engagement. Through this theoretical integration, this study offers a more comprehensive framework for understanding teachers' IWB, expanding the application boundaries of existing theories.

Second, this study addresses the gap in research on the effects of technostress and role overload on teachers' IWB, as previous studies have yielded inconsistent and inconclusive results, with some suggesting these stressors can either facilitate or hinder innovation. Based on the JD-R model and COR theory, this study constructs an integrated model to systematically examine the impact of technostress and role overload on teachers' IWB in the context of higher vocational education. This study also introduces emotional exhaustion and intrinsic motivation as mediating variables to reveal how technostress and role overload influence IWB through resource depletion and motivational changes.

Third, this study introduces career future time perspective as a potential predictor of teachers' IWB. Teachers with a strong career future time perspective tend to align their current work behaviors with future career goals, thereby stimulating innovative motivation and enhancing innovation performance. This study also contributes to the literature by introducing emotional exhaustion and intrinsic motivation as mediators in the relationship between career future time perspective and IWB. Specifically, it reveals how career future time perspective promotes IWB by enhancing intrinsic motivation and reducing emotional exhaustion, thus providing a more nuanced understanding of the psychological processes through which time perception influences IWB. Through this theoretical extension, this study fills a gap in research on time perception as a psychological resource in the field of IWB and provides theoretical support for educational administrators on how to foster teachers' IWB by cultivating teachers' future-oriented perspectives.

Fourth, resilience, as a key individual resource, plays a critical role in helping individuals navigate stress and maintain a positive outlook in the face of challenges. Previous studies have largely conceptualized resilience as a defensive resource that buffers the detrimental effects of job demands, while overlooking its potential proactive and motivational functions. Drawing on the JD-R model, this study reconceptualizes resilience not only as a protective mechanism against work-related stress but also as a generative personal resource that directly facilitates innovation. Specifically, this study advances the literature by examining the indirect effect of resilience on IWB through intrinsic motivation. This provides new insights into how personal resources like resilience can foster innovation by enhancing intrinsic motivation, offering important implications for supporting teachers' IWB in high-pressure educational environments.

Fifth, this study advances the literature by integrating individual-level and organizational-level resources into a unified conceptual framework, thereby offering a more comprehensive explanation of teachers' IWB. By empirically demonstrating the synergistic effects of personal and organizational resources under high job demands, the study extends existing resource-based perspectives and highlights how multi-level resource configurations jointly facilitate innovation in high-pressure work environments.

Finally, by focusing on teachers in higher vocational colleges, this study contributes to the IWB literature by delineating the contextual boundaries of prevailing theoretical frameworks. The findings indicate that the core propositions of the JD–R model and COR theory remain applicable in vocational education contexts characterized by intensive technological demands and complex role expectations, thereby enhancing the external validity of these theories.

1.2.2 Practical Significance

This study provides practical guidance for educational administrators, policymakers, and relevant stakeholders by systematically analyzing the effects of technostress, role overload, resilience, career future time perspective, and innovative climate on innovative work behavior (IWB) in higher vocational education. The specific practical significance is outlined as follows:

First, this study reveals the impact of technostress and role overload on teachers' IWB and offers concrete recommendations for educational administrators to address these stress-related factors. To effectively alleviate the stress caused by technological updates, higher vocational institutions could organize regular training sessions to enhance teachers' technical skills, helping them adapt to new technologies. Additionally, higher vocational colleges can establish dedicated technical support teams to provide timely solutions to technical issues, enabling teachers to better manage technological changes and reduce anxiety caused by technostress. Furthermore, educational administrators could optimize task allocation mechanisms, reducing non-teaching responsibilities such as administrative work to allow teachers to focus more on teaching and research innovation, ultimately fostering their IWB. By providing adequate support systems and resource allocation, educational institutions can reduce the negative impact of work-related stress and stimulate teachers' innovation potential, ultimately enhancing educational quality and fostering an innovative teaching environment.

Second, by introducing career future time perspective as a key antecedent of IWB, this study emphasizes the role of long-term career orientation in stimulating innovative work behavior. Educational administrators can help teachers establish long-term career development goals and guide them in setting clear career paths, thereby stimulating their intrinsic motivation. Educational administrators can implement regular career planning counseling, provide career development training, and create more academic exchange opportunities to strengthen teachers' career future time perspective, encouraging them to engage more actively in teaching innovation and educational reform.

Third, resilience plays a critical role in helping teachers cope with work-related stress, manage emotional exhaustion, and maintain innovative motivation. Educational administrators can implement mental health support programs, such as regular psychological counseling and emotional health assessments, to help teachers manage stress and strengthen their coping abilities. Additionally, organizing resilience training programs can effectively improve teachers' coping skills and help them adapt to rapid changes in the educational environment. These measures will stimulate teachers' intrinsic motivation, enhance their innovative thinking, and promote the implementation of IWB.

Fourth, the role of an innovative climate as an organizational resource cannot be ignored in promoting teachers' IWB. Educational administrators should aim to create an inclusive and supportive culture for innovation. By implementing reward systems for innovation, such as research funding, teaching awards, and promotion opportunities, teachers can be encouraged to adopt innovative teaching methods and technologies. At the same time, granting teachers more autonomy and encouraging them to explore new methods in teaching and research can foster cross-disciplinary collaboration. By providing more teaching autonomy and incentive measures, educational administrators can effectively stimulate teachers' innovative drive, further enhancing innovative climate and overall educational quality.

Fifth, this study provides specific guidance for alleviating teachers’ emotional exhaustion and stimulating their intrinsic motivation. Educational administrators should pay closer attention to teachers' mental health, conducting regular emotional health assessments to identify teachers at risk of emotional exhaustion and providing necessary psychological support services. Additionally, administrators can reduce excessive work pressure by optimizing working conditions and task allocation, particularly by cutting

down on unnecessary administrative tasks and repetitive work, thus reducing emotional burdens. To stimulate teachers' intrinsic motivation, educational administrators can help teachers establish career development plans, assist in personal career growth, and offer additional resources such as teaching and research funding, academic exchange opportunities, and training programs. These measures will not only help teachers maintain a positive work attitude but also encourage them to innovate in teaching and research, further promoting their IWB.

Sixth, the findings of this study provide empirical evidence to help policymakers design policies that support teachers' innovation and drive educational reform. Policymakers can use the results of this study to create policies that promote an innovation culture, such as providing support for teachers' innovation, optimizing the working environment, and strengthening teachers' career development. Furthermore, policies should address teachers' workload and stressors, ensuring that teachers receive the necessary resources and support during the innovation process, thereby enhancing educational quality and innovation capacity.

Finally, this study provides practical guidance to some other stakeholders, including administrative personnel, industry partners, professional associations, and teachers themselves. For administrative and support staff, they can streamline administrative processes, manage resources efficiently, and ensure the smooth implementation of innovative teaching practices, enabling teachers to focus on research and instruction. For industry partners and professional associations, establishing cross-disciplinary innovation labs and collaborative projects allows teachers to experiment with new methods and technologies in real-world contexts, enhancing the relevance and applicability of teaching innovations. For teachers themselves, beyond participating in conventional training, they can engage in self-directed learning, reflective practice, and the application of innovative teaching technologies, while participating in cross-disciplinary or industry-linked projects to translate novel ideas into practice and strengthen both professional growth and intrinsic motivation.

By providing technical support, clarifying work roles, enhancing resilience, fostering an innovative climate, promoting teachers' emotional well-being, strengthening intrinsic motivation, and developing a strong future-oriented time perspective, this study offers a comprehensive framework to support teachers' innovative work behavior in higher

vocational colleges. Importantly, this framework integrates organizational support mechanisms with individual psychological resources, highlighting their complementary roles in sustaining innovation under high workload and institutional constraints. Through coordinated efforts among educational administrators, policymakers, teachers, administrative and support staff, industry partners, and professional associations, these strategies can be institutionalized in professional development, thereby driving sustainable innovation and the overall development of higher vocational education.

1.3 Statement of Research Questions

RQ1: How do technostress, role overload, resilience, career future time perspective and innovation climate influence teachers' innovative work behavior in higher vocational colleges?

RQ2: How do emotional exhaustion and intrinsic motivation mediate the relationship between technostress, role overload, resilience, career future time perspective, innovation climate, and teacher's innovative work behavior in higher vocational colleges?

1.4 Statement of Research Objectives

RO1: To examine the influence of technostress, role overload, resilience, career future time perspective, and innovation climate on teachers' innovative work behavior in higher vocational colleges.

RO2: To verify the mediating roles of emotional exhaustion and intrinsic motivation in the relationships between technostress, role overload, resilience, career future time perspective, innovation climate, and teachers' innovative work behavior in higher vocational colleges.

1.5 Methodology

This study adopted a quantitative research approach grounded in the positivist research paradigm to systematically examine the mechanisms shaping innovative work behavior (IWB) among teachers in higher vocational colleges. A cross-sectional survey design was employed to test theory-driven hypotheses derived from the JD-R model, COR theory, and related frameworks.

Participants were higher vocational college teachers in Heilongjiang Province, China. To balance representativeness with field feasibility, the study used a multi-stage

sampling strategy combining purposive sampling, quota sampling and convenience sampling. A total of 650 questionnaires were distributed, and 581 valid responses were retained for analysis. Data were collected using a structured questionnaire measuring eight latent variables with 57 items. All scales were adapted from internationally validated instruments and refined to fit the higher vocational education context. A back-translation procedure was implemented to ensure semantic equivalence between language versions. Prior to the main survey, a pilot test was conducted to evaluate item clarity and preliminary instrument performance, and minor revisions were made accordingly.

Data analysis was performed SPSS Statistics 26.0 and AMOS 26.0 under valid software licenses, including descriptive statistics, reliability and validity tests, common method bias assessment, confirmatory factor analysis, and structural equation modeling for path analysis. Structural equation modeling is suitable for simultaneously estimating multiple direct and indirect paths within one integrated model. Mediation effects were tested using the bootstrap method with 5,000 resamples to ensure statistical robustness. Throughout the study, strict adherence to APA and IRB ethical guidelines was maintained, ensuring informed consent and data confidentiality.

1.6 Definitions of Terms

1.6.1 Technostress

Technostress is a core and constantly evolving concept in the fields of organizational psychology, used to describe the psychological stress and adaptation challenges experienced by individuals when facing a high penetration of technology in the digital work environment (Nastjuk et al., 2024). The concept was first introduced by Brod (1984), who defined technostress as “a modern disease of adaptation caused by an inability to cope with new computer technologies in a healthy manner”. Researchers further expanded technostress to a persistent stress experience caused by the frequent use of various technological tools and software by end-users (Rademaker et al., 2025). Essentially, technostress reflects a psychological burden, discomfort, and resource consumption process directly related to technology use (Kiassi & Jahidi, 2023).

The sources of technostress are generally categorized into five core techno-stressors (Pothuganti, 2024). Techno-overload refers to technology compelling the individual to work faster and more, leading to an increased workload; Techno-invasion

describes how technology blurs the boundaries between work and private life, demanding continuous connectivity; Techno-complexity refers to the incompetence felt due to a lack of necessary skills to master the technology; Techno-insecurity is the concern over job displacement by technology or by colleagues with superior technical skills. Finally, Techno-uncertainty refers to the pressure for continuous learning caused by rapid technological updates (Nisafani et al., 2020). The existence of these stressors continuously depletes individual resources, thereby inhibiting positive behaviors such as innovation, which requires substantial cognitive and emotional investment (Zhang et al., 2025). Although prior studies have distinguished different forms or sources of techno-stressors, this study conceptualizes technostress as an overall perceived level of technology-related stress. Existing research indicated that the effect of technostress on individual performance and behavioral outcomes is not unidirectional or entirely negative, but highly dependent on the specific context and the individual's available cognitive and social resources (Khalequzzaman et al., 2025).

From a theoretical perspective, the present study situates technostress within the job demands–resources (JD–R) model (Bakker & Demerouti, 2023). Technostress is conceptualized as a core job demand (Scholze & Hecker, 2024). As a job demand, technostress requires employees to invest sustained psychological and physiological effort to cope with technological complexity and continuous updates (Pothuganti, 2024), thereby activating the health-impairment process proposed by the JD–R model (Nastjuk et al., 2024).

In this study, technostress is operationally defined as the overall psychological burden and adaptation challenges experienced by higher vocational college teachers when they are unable to effectively manage or adapt to the use of new technologies in their teaching (Sharma et al., 2024).

1.6.2 Role Overload

Role overload is a critical work-related stressor rooted in role theory, defined as a condition in which individuals perceive that the volume of tasks, responsibilities, or expectations associated with their professional roles exceeds their available time, abilities, or personal resources (Alyamy & Cheong, 2020). Rather than being an objective measure of workload, role overload is fundamentally subjective, emphasizing the perceived imbalance between external job demands and internal coping capacity (Tang &

Vandenberghe, 2021). In the specific landscape of higher vocational education, teachers frequently encounter multiple role demands, simultaneously managing diverse expectations including classroom instruction, academic research, administrative duties, and school-enterprise collaborations (Shan, 2020). This accumulation of roles makes role overload a particularly salient predictor of career stress for teachers (Meng & Wang, 2018). This definition underscores the subjective nature of role overload, emphasizing individuals' perceptions of an imbalance between job demands and personal resources rather than objective workload levels (Tang & Vandenberghe, 2021).

From a theoretical perspective, role overload is typically conceptualized as a job demand within the job demands–resources model. As a job demand, it requires sustained cognitive, emotional, or physical effort and may impair individual functioning through the health impairment process (Bakker et al., 2023). Experiencing role overload can heighten the perceived risk of additional resource investment, as uncertainty regarding task prioritization and expected returns renders further resource expenditure less attractive. Although role overload is often associated with detrimental outcomes, its effects are not uniform. Prior research suggests that whether role overload is perceived as a hindrance stressor or a challenge stressor depends on the availability of organizational resources and support, as well as individuals' cognitive appraisal of the overload (Chen & Li, 2024; Clarke & Higgs, 2020).

Within the context of higher vocational education, teachers are frequently required to fulfill multiple role expectations simultaneously, including teaching, research, administrative duties, and school–enterprise collaboration. Such role multiplicity increases the likelihood that teachers perceive an imbalance between workload and available resources, thereby making role overload a salient work stressor in this setting (Zhang, 2019).

In this study, role overload is operationally defined as the extent to which teachers in higher vocational colleges perceive that their available resources (e.g., time, energy, and abilities) are insufficient to meet the work demands and role expectations imposed by their institution or position (Xie et al., 2024).

1.6.3 Resilience

Resilience is a core personal resource extensively examined in organizational behavior, occupational psychology, and educational management research (Lu et al., 2024). The term originated from the Latin resilire, meaning ‘to bounce back’ or ‘to recover’, and in psychology, it refers to individuals’ capacity to effectively cope with adversity, adapt to challenging circumstances, and recover from stressors while maintaining psychological functioning (Bonanno et al., 2024). In contemporary psychological research, resilience is not viewed as a fixed personality trait but rather as a dynamic, multidimensional, and malleable process that develops over time through the interaction between risk factors (e.g., stressors or threats) (Zhang & Luo, 2023). Accordingly, resilience reflects individuals’ ability to mobilize internal capacities and external resources to withstand pressure, recover from setbacks, and sustain effective functioning in demanding environments (Grygorenko & Naydonova, 2023; Bonanno et al., 2024).

From the perspective of the JD-R model, resilience functions as a personal psychological resource that supports motivation and enables individuals to cope more effectively with job demands (Demerouti & Bakker, 2023; Lu et al., 2024). Similarly, the COR theory regards resilience as a protective resource that helps individuals prevent excessive resource loss and recover more rapidly following stress exposure (Hur & Moon, 2024). In educational organizations, teacher resilience refers to educators’ capacity to maintain psychological well-being, professional commitment, and effective performance when facing sustained occupational demands and work-related stressors. Given the complex and demanding nature of teaching roles, resilience is widely regarded as a critical professional competence for teachers, particularly in contexts characterized by high workload and role multiplicity (Baatz & Wirzberger, 2025).

In this study, resilience is operationally defined as higher vocational college teachers’ capacity to adapt to work-related challenges, stress, and setbacks and to recover psychologically while maintaining effective functioning in their professional roles (Flores-Builes et al., 2022).

1.6.4 Career Future Time Perspective

Career future time perspective originates from the broader psychological construct of future time perspective, which describes individuals' cognitive and motivational orientation toward the future, including their perceptions of remaining time and the extent to which future goals are mentally represented and integrated into present decision-making (Kooij et al., 2017). Individuals with a strong future time perspective tend to adopt a forward-looking mindset, emphasize long-term outcomes, and regulate their current behavior based on anticipated future goals and opportunities (Remondi et al., 2026). Future time perspective has a significant influence on individuals' motivation, planning, behavior, and overall well-being (Mrisho, 2023).

Importantly, career future time perspective differs from general future time perspective because it is domain-specific. It reflects the extent to which individuals value their future career, perceive opportunities for career success, and believe that their current work-related activities are meaningfully connected to their long-term career development (Rudolph et al., 2018; Park et al., 2021; Hai & Park, 2024). Rather than focusing solely on present job demands, individuals with a high level of career future time perspective are more likely to view current efforts as investments in their future career trajectories.

From a theoretical perspective, socioemotional selectivity theory (SST) provides an important framework for understanding career future time perspective. SST posits that individuals' motivational priorities shift as a function of their perceived future time horizon, such that those who perceive ample future time tend to prioritize growth-oriented goals, including knowledge acquisition, skill development and innovation (Kooij et al., 2017). Within the job demands–resources (JD-R) model, career future time perspective is conceptualized as a personal psychological resource that supports self-regulation, proactive goal pursuit, and sustained motivation in the face of work demands (Kelleher, 2024). In educational organizations, career future time perspective is particularly salient for teachers, whose professional roles often require continuous learning, pedagogical innovation, and long-term career planning. Teachers with a strong future outlook are more inclined to experiment with new teaching methods and pursue innovation (Ertaş & Pekmezci, 2025).

In this study, career future time perspective is operationally defined as higher vocational college teachers' perceptions of future career opportunities, the importance they

attach to long-term career goals, and their awareness of the connection between current work behaviors and future career development (Park et al., 2021).

1.6.5 Innovation Climate

The innovation climate, often referred to as organizational innovation climate, is a fundamental concept in organizational studies that describes the work context perceived by employees as supportive of new ideas and creative efforts (Jiang et al., 2023). It is defined as the shared perception among organizational members regarding the practices, procedures, and behaviors that promote the generation of new knowledge and practices (Mokhlis & Abdullah, 2025). More broadly, it refers to the organizational environment that actively encourages creativity, experimentation, and the implementation of novel ideas (Alizadeh et al., 2025). This atmosphere is typically characterized by key attributes such as psychological safety, autonomy, openness to risk, and tolerance for failure (Malibari & Bajaba, 2022).

Furthermore, a strong innovation climate involves institutional practices related to leadership support, resource availability, team collaboration, and tolerance for failure (Jiang et al., 2023). Innovation climate functions as an indispensable external factor, providing the cognitive foundation necessary to support the development of innovation-related actions among members (Liu et al., 2025). Such a supportive climate motivates employees by offering them time and resources to generate, share or exchange, and experiment with innovative ideas or solutions (Popa et al., 2017). Conceptually, innovation climate is consistently designated as a key organizational resource within the framework of the JD-R model. Empirical evidence demonstrated that a supportive innovation climate significantly enhances individuals' innovative work behavior (Lecic et al., 2023). In higher vocational colleges, such a climate is particularly reflected in institutional support for pedagogical experimentation, curriculum innovation, and collaboration with industry.

In this study, innovation climate is operationally defined as the perceived degree to which higher vocational colleges encourage and actively establish an organizational environment that supports teachers' innovation (Ye et al., 2022).

1.6.6 Emotional Exhaustion

Emotional exhaustion is widely recognized as the core dimension of job burnout, representing the energetic component of this psychological state (Edú-Valsania et al., 2022). Scholars consider it the primary and most obvious manifestation of burnout, often

emerging as the initial phase in the overall burnout process (Levante et al., 2025). Conceptually, emotional exhaustion refers to an individual's perception of feeling emotionally overextended, overwhelmed, and depleted of emotional and physical resources due to prolonged and persistent work-related demands (Scheepers & van den Berg, 2025). This definition underscores a subjective state in which individuals feel their emotional resources have been overused and completely drained, consequently leading to mental and physical exhaustion (Nasiri et al., 2025). The characteristic symptoms include feelings of constant fatigue, increased irritability, and a noticeable decline in the individual's overall capacity to effectively manage job requirements (Werang et al., 2025). In the context of the teaching profession, emotional exhaustion is a major concern, due to the high demands and emotional labor inherent in their roles (Trauernicht et al., 2025; Squillaci, 2020).

The JD-R model serves as a foundational framework for understanding the mechanisms of emotional exhaustion, positing it as the key outcome of the health impairment process (Borst, 2022; Montani et al., 2020). Within this model, emotional exhaustion results when an imbalance occurs, particularly when job demands are excessive and are not sufficiently buffered by job resources, leading to the rapid depletion of psychological and physiological energy (Giauque & Weissbrodt, 2021). Complementary to this, the COR theory views emotional exhaustion fundamentally as a stress response triggered by actual or threatened resource loss (Hsieh et al., 2021).

In this study, emotional exhaustion is operationally defined as the extent to which teachers in higher vocational colleges perceive that their emotional and psychological resources have been depleted as a result of sustained work demands, leaving them feeling fatigued, emotionally drained, and unable to effectively cope with their job responsibilities (Jia et al., 2022).

1.6.7 Intrinsic Motivation

Intrinsic motivation is a key motivational construct in organizational behavior that explains the driving forces underlying individuals' behaviors (Fishbach & Woolley, 2022). It is defined as a behavioral tendency that arises from inherent interest, enjoyment, satisfaction, or the positive challenge of an activity itself, rather than from external rewards or pressures (Ryan & Deci, 2020; Siyal et al., 2021). This intrinsic form of motivation is

enduring and self-determined, and it is associated with deeper cognitive engagement and greater behavioral persistence (Alonso et al., 2025; Lasisi et al., 2024).

In organizational behavior research, intrinsic motivation also plays a pivotal mediating role in the motivational process of the JD-R model (Moon et al., 2020; Liang et al., 2022), through which job resources facilitate employee growth, learning, and goal attainment. This internal drive is particularly critical for IWB, as it stimulates individuals to proactively generate and implement novel ideas (Chen, 2024; Yeap, 2024), and has been consistently identified as a significant positive predictor of IWB (Su & Zhang, 2022).

In this study, intrinsic motivation is operationally defined as the extent to which teachers in higher vocational colleges engage in teaching activities and innovative practices driven by personal interest, satisfaction, and the experience of positive challenge (Wang et al., 2024).

1.6.8 Innovative Work Behavior

Innovative work behavior (IWB) is a central construct in the fields of organizational behavior and innovation management. It refers to employees' intentional initiation and implementation of novel ideas, methods, or strategies aimed at improving performance, optimizing work processes, or driving organizational innovation (AlEssa & Durugbo, 2022; Bayram & Esra, 2025). IWB reflects self-initiated, change-oriented behavior through which individuals seek to generate benefits for their job roles, teams, or the organization as a whole (Javed et al., 2020).

A substantial body of research conceptualizes IWB as an extra-role behavior that goes beyond formal job requirements and routine task performance. Rather than being confined to prescribed duties, IWB involves discretionary efforts to introduce and apply useful new ideas that support organizational development and adaptability (Stoffers et al., 2020). Accordingly, contemporary scholars increasingly view IWB not as a single act, but as a complex, multi-stage process (Manalo et al., 2024). This process-oriented perspective typically distinguishes three interrelated stages: idea generation, idea promotion, and idea implementation (Santiago, 2023). Idea generation represents the initial phase, in which employees identify problems, opportunities, or challenges in their work and develop novel and useful ideas in response. Idea promotion involves actively advocating these ideas within or beyond the organization to obtain social support, legitimacy, and necessary. Finally, idea implementation refers to the realization of innovative ideas through their

application in practice, resulting in improvements in organizational outcomes (Lambriex-Schmitz, 2020).

In today's highly competitive and rapidly changing global environment, IWB is widely regarded as a critical factor for organizational survival and sustained competitive advantage (Hock-Doepgen et al., 2025). This is particularly evident in the education sector, where teachers' IWB is manifested in the adoption and development of new teaching methods, digital technologies, instructional tools, and curricular content to enhance students' learning experiences and creative potential (Daud et al., 2024; Zhou et al., 2024). Such behaviors enable educational institutions to respond effectively to external pressures, including digital transformation and industry upgrading, thereby supporting long-term institutional development (Hernaus et al., 2022; Lou et al., 2024).

In this study, innovative work behavior (IWB) is operationally defined as the extent to which teachers intentionally generate, promote, and implement novel ideas, teaching methods, or work practices in their teaching-related activities, with the aim of improving instructional effectiveness, work processes, and educational outcomes (Afsar et al., 2021).

1.7 Delimitation of the Thesis

This study explicitly delimits the generalizability of its findings with respect to geographical context, target population, and conceptual scope. These delimitations are necessary to maintain analytical focus and contextual coherence.

This study is geographically delimited to higher vocational colleges located in Heilongjiang Province, China. Situated in Northeast China, Heilongjiang is a representative resource-based province that has been undergoing sustained industrial restructuring and digital transformation in response to national economic upgrading strategies. In this context, higher vocational education plays a critical role in cultivating technically skilled talent to support regional development. As of 2025, Heilongjiang Province hosts 38 higher vocational colleges, distributed across 12 prefecture-level cities, including Harbin, Qiqihar, Mudanjiang, and Daqing, forming a relatively concentrated regional vocational education system (Heilongjiang Provincial Department of Education, 2025). All sampled institutions in this study are located within these cities. These institutions were undergoing digital transformation and promoting industry-education integration as part of ongoing vocational education reforms. In this context, teachers were

expected not only to incorporate digital teaching platforms and emerging educational technologies into their instructional practices, but also to assume additional responsibilities related to curriculum reform, skills-oriented training, student internship supervision, and collaboration with enterprises. Such institutional characteristics place relatively high technological and role demands on teachers, making higher vocational colleges an appropriate setting for examining job demands, job resources and teachers' innovative work behavior. Accordingly, the findings are primarily generalizable to higher vocational institutions operating under comparable regional, policy, and institutional conditions.

With respect to the target population, this study focuses exclusively on full-time, in-service teachers employed in higher vocational colleges in Heilongjiang Province, China. According to official statistics, as of 2025, Heilongjiang Province comprises 38 higher vocational colleges with more than 10,000 teachers (Heilongjiang Provincial Department of Education, 2025). Within the context of regional economic transformation and vocational education reform, this group typically undertakes multiple professional responsibilities, including teaching, curriculum reform, technology integration, and school-enterprise collaboration, making them a key driving force in educational quality improvement and innovation practice. To ensure relative consistency in role expectations and job demands, part-time instructors, administrative personnel, and non-teaching staff were excluded from the sample. Therefore, the results should be interpreted as reflecting behavioral patterns specific to teachers in higher vocational education. The applicability of these findings to teachers in other educational sectors or to non-educational occupational groups therefore requires further empirical validation.

At the conceptual level, this study delimits its analytical scope to a specific theoretical model comprising eight core variables, including five predictor variables (technostress, role overload, resilience, career future time perspective, and innovation climate), two mediating variables (emotional exhaustion and intrinsic motivation), and one outcome variable (innovative work behavior). Constructs and factors not incorporated into the proposed research model fall beyond the scope of this study. Accordingly, the findings should be interpreted strictly within the boundaries of these specified variables.

1.8 Outline of the Thesis

The main body of this thesis is organized into five chapters, as outlined below.

Chapter 1: Introduction. This section lays the foundation for the entire study by clarifying the broader research context, core research problems, and the overall value of the study. This chapter first discusses the research background. It then identifies key research gaps in the existing literature. Subsequently, the theoretical and practical significance of the study is articulated, and two central research questions and corresponding two research objectives are proposed. Finally, this chapter provides clear operational definitions of eight core latent variables. The scope of the study is also specified in terms of geographical context, target population, and observed variables.

Chapter 2: Literature Review. This section aims to develop the theoretical framework of the study and to formulate the research hypotheses. First, the research context is discussed. Next, the theoretical foundations of the study are systematically reviewed. Subsequently, prior theoretical and empirical studies related to the eight core latent variables are reviewed. Based on this integrative literature review and theoretical reasoning, an empirical research model is developed, and 21 research hypotheses (H1–H21) are formally proposed.

Chapter 3: Methodology. This section details the research design, data collection procedures, and analytical methods employed in this study to ensure scientific rigor and methodological robustness. This chapter first justifies the adoption of a quantitative research approach grounded in the positivist research paradigm. It then describes the cross-sectional survey design and provides a detailed account of the measurement instruments, the back-translation procedure, and the pilot testing process. Next, the target population is defined, and a multistage sampling strategy is explained to enhance the representativeness of the sample. The chapter then outlines the data analysis procedures, including descriptive statistics, reliability and validity testing, common method bias assessment, confirmatory factor analysis, and structural equation modeling for hypothesis testing. In addition, the bootstrap method is employed to examine mediation effects. Finally, ethical considerations relevant to the research process are addressed.

Chapter 4: Results. This section presents the empirical results of the study. It begins with a summary of the demographic characteristics of the respondents and the descriptive statistics of the core variables. It then reports the results of tests for common method bias

and the evaluation of the measurement model, including model fit as well as reliability and validity. Next, the findings from the structural model are presented to assess the proposed hypotheses and the estimated relationships among the constructs. Finally, the results of bootstrap analyses are reported to examine the proposed mediation effects.

Chapter 5: Discussion and Conclusion. This section provides an in-depth discussion of the research findings, followed by the presentation of the study's theoretical contributions, practical implications, and limitations, as well as directions for future research. Drawing on the empirical results and in comparison with prior studies, this chapter first interprets the key findings and highlights their theoretical and practical implications. Then this chapter concludes by summarizing the main limitations of the study and outlining implications for future research.

In summary, the thesis moves from theory building to theory testing and interpretation, ensuring that each chapter contributes directly to answering the research questions and validating the proposed framework. By moving from contextual problem identification to theory development, empirical testing, and integrated interpretation, the thesis presents a coherent narrative of how job demands and resources shape teachers' innovative work behavior.

1.9 Conclusion

This chapter establishes the foundation for the present study by systematically outlining its core components. It begins by introducing the research background, emphasizing the growing importance of teachers' innovative work behavior in higher vocational education under conditions of rapid technological change. The chapter then identifies key research gaps in existing studies, which motivate the development of the current research. Subsequently, the theoretical and practical significance of the study is articulated, followed by the formulation of the research questions and objectives. The chapter further clarifies the methodological approach, defines the core constructs, and specifies the research scope and boundaries. Finally, the overall structure of the thesis is presented, thereby providing a clear roadmap for the subsequent chapters. In the following chapters, Chapter 2 will provide a comprehensive literature review, focusing on the context of the study, the parent and immediate disciplines, empirical models and hypothesis development. Chapter 3 will describe the research design in detail, involving major data

collection method, reliability and validity issues, pilot test, target population, sampling method, data collection process, data analysis and ethical considerations. Chapter 4 will present the empirical results of the study. Chapter 5 will discuss the key findings in relation to existing theories and prior research, and concludes by outlining the theoretical contributions, practical implications, research limitations, and directions for future research.

CHAPTER 2
LITERATURE REVIEW

In response to the research questions presented in Chapter 1, this chapter aims to review the latest research findings in the field of this study and explore the key factors influencing teachers' innovative work behavior in Chinese higher vocational colleges in-depth. By analyzing existing literature, this chapter seeks to provide a comprehensive understanding of the research topic and establish the theoretical foundation for the subsequent study. This chapter is structured into five sections: First, the contexts of the study is introduced; second, the parent discipline that frames the research is discussed; third, immediate discipline is explored; fourth, this chapter presents the empirical model and explains the development of the research hypotheses, and finally this chapter concludes with a summary of the key insights.

2.1 Contexts of the Study

2.1.1 Impact of Emerging Technological Change on Vocational Education

Vocational education is the cornerstone of developing a skilled workforce worldwide (Ghosh & Ravichandran, 2024). By 2030, over 1 billion young people are expected to enter the workforce globally, most of whom will need vocational skills education (World Bank, 2021). Vocational education primarily aims at training students in specific occupational skills, equipping them with professional knowledge and practical abilities required for particular industries or fields. It was pointed out by Sudira (2019) that the core goal of vocational education was to prepare students for employment. Vocational education plays a vital role in developing skilled labor and promoting economic growth (Suparyati et al., 2024).

The rapid development of emerging technologies has profoundly influenced the education sector, especially for vocational education (Hossain, 2023; Zhao & Han, 2024). Firstly, new technologies are fundamentally reshaping the skills demanded by the labor market (Xu et al., 2024). Globalization and technological advancement have driven the development of automation and artificial intelligence, leading to the gradual disappearance

of traditional low-skilled jobs and a significant increase in demand for high-skilled workers (World Economic Forum, 2025). The skills employers require are shifting away from manual labor and routine tasks towards advanced, technology-driven abilities focused on digitalization (Bailey, 2022). In this evolving landscape, workers are expected to posses not only core industry expertise but also advanced skills such as data analysis, digital collaboration, artificial intelligence system operation, automated process management, and effective use of remote collaboration tools (Masiello et al., 2023). Moreover, the future workforce must have a solid technological foundation, as well as the ability to solve complex problems and adapt to rapidly changing environments (Bühler et al., 2022). Given these shifts, vocational education—acting as a critical bridge between education and the labor market, must proactively innovate to meet the demands of technological changes and prepare students for career development in the digital age (Zhao & Han, 2024).

Therefore, emerging technologies have significantly stimulated innovation in higher vocational education. These advancements offer higher vocational education more efficient, immersive, and interactive tools (Ghosh & Ravichandran, 2024). For instance, virtual reality and augmented reality allow students to practice complex procedures in risk-free environments, such as surgical operations or mechanical repairs, significantly enhancing skill acquisition while reducing physical resource costs (AlGerafi et al., 2023). The application of artificial intelligence and machine learning enables the analysis of student performance and the customization of personalized training modules. Big data and analytics provide real-time feedback on students' learning behaviors, helping teachers optimize course design (Cui, 2025). These innovations require vocational curricula to be dynamic and responsive. Educators must continuously update course content to reflect real-time industry trends, ensuring vocational training more flexible and responsive to the evolving employer demands (Zhao & Han, 2024; Martini, 2024). This context simultaneously stimulate teaching innovation and intensify teacher’s work-related demands, which provides a critical backdrop for examining teachers’ innovative work behavior and its antecedents in higher vocational education.

2.1.2 The Importance of Teachers' Innovative Work Behavior in Vocational Education

Innovative work behaviour (IWB) is the process by which employees generate and implement new ideas to enhance performance (AlEssa & Durugbo, 2022). It is strongly associated with employee creativity and the application of new ideas within a work group (Volery & Tarabashkina, 2021). In the era of rapid technological advancement, whether vocational education can effectively adapt to technological changes largely depends on teachers' IWB. Teachers are the main implementers and innovators of teaching innovation, and their IWB plays an important role in shaping the success of vocational education goals (Lambriex-Schmitz, 2020). Teachers stand at the forefront of developing new ideas, identifying opportunities for improvement in teaching, and integrating new technologies and methods into teaching practices to address the rapidly changing external environment (Cao et al., 2020). This shift places new demands on the role of teachers, who are expected to serve as no longer merely knowledge transmitters but also guiders and facilitators in the learning process (Windelband, 2023). Teachers should move beyond traditional teaching methods and continuously innovate their teaching strategies to adapt to the application of new technologies and meet students' diverse learning needs (Thelma et al., 2024). By integrating emerging technologies, adopting flexible teaching strategies and designing innovative courses, teachers can effectively enhance students' vocational competencies, equipping them to meet the demands of the modern workplace (Ghosh & Ravichandran, 2024). For instance, by combining virtual reality technology with project-based learning methods, teachers can create more interactive teaching environments, capture students' interest and enhance their engagement (Ghanbaripour et al., 2024). Meanwhile, teachers' IWB can create a positive learning atmosphere that effectively boosts students' motivation and active participation, while also helping them develop practical skills through hands-on learning experiences (Dörnyei & Ushioda, 2021). Therefore, in the context of technological changes, the importance of teachers' IWB becomes even more prominent.

2.1.3 Context of Higher Vocational Education in China

As the world's second-largest economy and a major manufacturing powerhouse, China's vocational education system plays an important role in supporting industrial upgrading and economic transformation (Xue & Li, 2022). China has the largest vocational education system in the world. As shown in Figure 2.1, it is primarily divided into two

categories, namely secondary vocational education (including vocational high schools, technical schools, and training institution) and higher vocational education, the latter focusing on developing high-skilled workers for emerging industries. The vocational education system in China provides essential human resources for China's economic development (Yuan & Wang, 2021). According to statistics from the Ministry of Education in 2025, there are 1,521 higher vocational colleges in China, accounting for 50.5% of all higher education institutions nationwide (Ministry of Education of China, 2025). As shown in Figure 2.2, from 2015 to 2025, the number of higher vocational colleges and student enrollment has shown a steady increase.

Higher vocational education has laid a solid talent foundation for China's economic development (He & Qi, 2023). In the past, China was known as the "world's factory," relying on a large workforce of low-skilled labor for mass production (Brühl, 2024). However, as China transitions to high-quality and intelligent manufacturing, the demand for highly skilled workers has surged (Xu & Li, 2024). Higher vocational colleges now must update their curricula to cultivate technical workers capable of meeting the needs of intelligent manufacturing. The Chinese government has strongly promoted higher vocational education through policy measures and financial investments (Xue & Li, 2022). For instance, the revised Vocational Education Law, effective May 1, 2022, stipulates that vocational education in China is of equal importance to traditional higher education and encourages diverse forms of vocational education (Xinhua News Agency, 2022). By 2023, the Chinese government had invested RMB 335 billion in higher vocational education (Hao et al., 2024). These policies and financial supports provide a solid guarantee for the innovative development of higher vocational colleges.

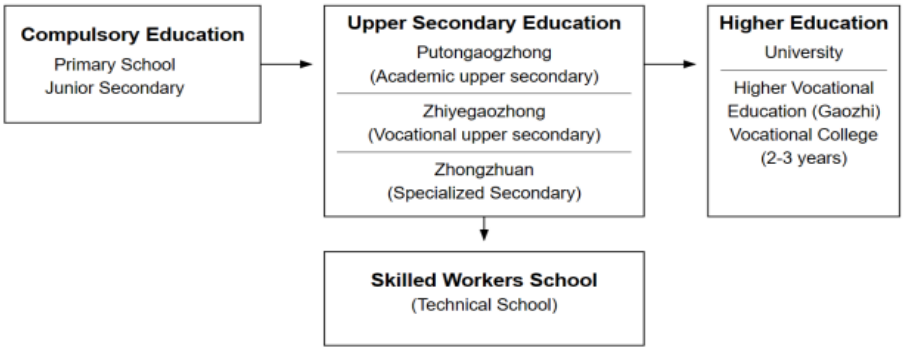

Figure 2.1 China's vocational education system

Source: Yuan & Wang (2021).

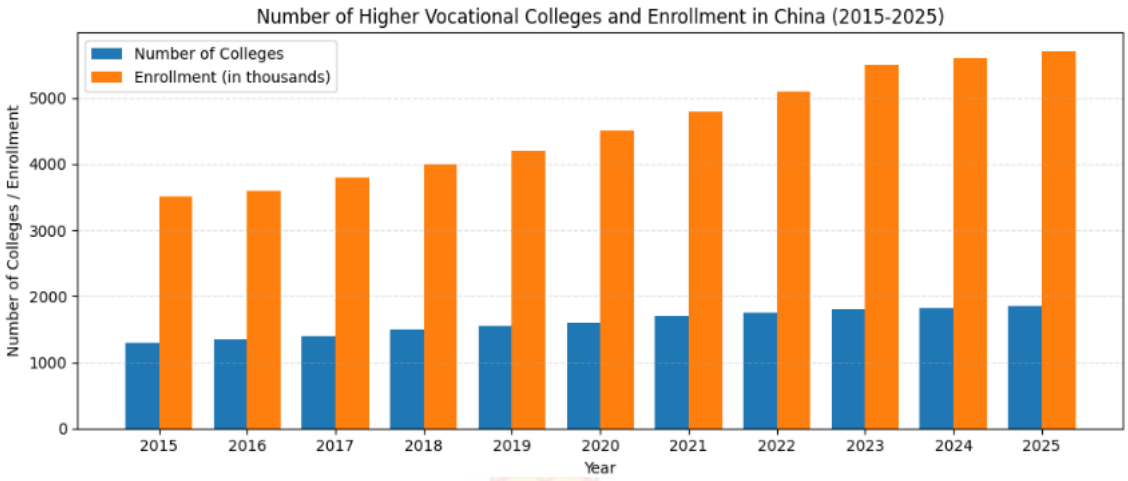

Figure 2.2 The number of higher vocational colleges and enrollments (2015-2025)
Source: Ministry of Education of China (2025)

2.1.4 Current Status of Teachers' Innovative Work Behavior in Chinese Higher Vocational Education

Despite the numerous opportunities provided by technological advancements for educational innovation, there are still significant shortcomings in the innovative work behavior among teachers in Chinese higher vocational colleges. Firstly, many teachers lag behind in updating teaching content and have not effectively integrated new technologies into curriculum design. The rapid pace of technological advancement requires vocational education curricula to reflect flexibility, innovation, and creativity (Xu & Li, 2022). However, most teachers still rely on traditional textbooks and teaching frameworks, failing to update their course content in line with industry technological developments (Tian et al., 2023). For instance, many colleges focus on traditional skills, with insufficient attention to emerging technologies such as intelligent manufacturing and robotics, which makes it difficult for students to meet the fast-changing demands of modern industries (Xu, 2024; Tian et al., 2023).

Additionally, innovation in teaching methods remains insufficient in higher vocational education (Tan & Du, 2022). Despite the broad potential of emerging technologies, such as virtual reality, augmented reality, and artificial intelligence, which can significantly enhance teaching quality and students' practical skills, many teachers have not effectively integrated these technologies into innovative teaching practices (Meng, 2024; Luo & Ma, 2024). At present, traditional lecture-based teaching methods still dominate most classrooms, with limited adoption of innovative teaching models that

actively engage students or develop their practical competencies (Cao et al., 2020; Luo & Ma, 2024).

Even when some teachers attempt to introduce modern technological tools, they often use these tools merely as replacements for traditional teaching aids, rather than fully exploring the deep potential of new technologies to transform teaching models (Li et al., 2023). This superficial innovation results in a lack of fundamental changes in teaching methods, leading to minimal improvements in instructional effectiveness (Meng, 2024). Furthermore, the uneven distribution of resources makes it difficult for many teachers to access the necessary technical support and professional development opportunities (Meng, 2024). These structural and capacity-related constraints limit the depth and sustainability of teaching innovation. Consequently, such challenges underscore the limitations in higher vocational teachers' innovative work behavior, thereby hindering the development of students' vocational skills (Xue & Li, 2022).

2.1.5 Challenges in Teachers' Innovation in Chinese Higher Vocational Education

The relatively low level of teaching innovation performance among Chinese higher vocational teachers is not accidental but rather the result of multiple contributing factors. Among these, technostress and role overload are potential constraints. With the rapid advancement of information technology, teachers in higher vocational colleges and universities must continuously adapt to and integrate numerous new technological tools and teaching methods. This fast-paced change has significantly increased the level of technostress. Moreover, higher vocational teachers are often required to take on a wide range of non-teaching responsibilities in addition to their teaching duties, leading to increased role overload (Wang et al., 2024). This study delves into the challenges of technostress and role overload faced by teachers in Chinese higher vocational colleges, highlighting their impacts on teachers' IWB.

2.1.5.1 Technostress among Higher Vocational College Teachers

With the rapid development of educational technology, teachers face significant technostress, especially the challenge of learning and mastering new technologies in a short period of time (Wang et al., 2024). Although the application of emerging technologies has improved teaching and learning outcomes, it has also significantly increased teachers' workload and techno-complexity. Many innovations in education, such as flipped classrooms, artificial intelligence, virtual reality, augmented

reality, cloud computing, and game-based learning tools, are far more complex than traditional classroom instruction (Hatlevik & Hatlevik, 2018). Studies have noted that the use of online teaching systems, student assessment platforms, and social media have further increased teachers' daily workloads, contributing to technostress (Khlaif et al., 2023). With prolonged exposure to technostress, teacher may become exhausted. As a result, the stress associated with new emerging technologies has become a prevalent issue among the teacher population.

Particularly in China, the Chinese education sector highly encourages teachers to use new technologies in both classroom and online teaching (Li et al., 2024). In China, the application of new technologies in higher vocational education, is more common and widespread. For example, virtual reality technology is used in vocational training for fields like medicine, architecture, and mechanical engineering to create safe simulated environments, allowing students to operate complex equipment or practice surgery in virtual environments (Chiang et al., 2022), and augmented reality technology has been used in innovative virtual laboratories or enhancing 3D images in textbooks, providing students with a more interactive learning experiences (Sun & Peng, 2020). Additionally, artificial intelligence technologies provide automated assessments and intelligent recommended pathways through personalized learning platforms, but this requires teachers to frequently adapt to new systems and master data analysis methods (Liu et al., 2023). These complex applications of new technologies require a high degree of professionalism, and teachers are likely to face technostress and adaptable burdens without adequate training in technology tools. Especially in areas with limited resources and technical support, higher vocational teachers face even greater pressure to adapt to these technologies (Ning, 2024). It was found that due to limited resources and insufficient training opportunities, teachers generally encounter difficulties in applying new technologies (Zhao et al., 2024). These factors have the potential to exacerbate technostress among higher vocational teachers. In China, research on teachers' technostress is still relatively scarce (Li et al, 2024). The few previous studies on teachers' technostress in China focus mainly on primary and secondary school teachers, with less attention given to higher education teachers, and even less on vocational education teachers (Li, 2024). Therefore, it is crucial to investigate the unique challenges faced by

higher vocational college teachers, particularly the technostress they experience when required to adapt to emerging technologies.

2.1.5.2 Role Overload among Higher Vocational College Teachers

The challenges that teachers face, balancing between teaching, research, and administrative roles, have attracted scholars to assess such factors within the academic context. Especially for teachers in Chinese higher vocational colleges, they are not only responsible for daily teaching tasks but also for non-teaching duties such as facilitating industry-school cooperation, managing student internship, and providing career guidance, making the issue of role overload particularly severe (Zhang, 2019). It was revealed that the increasing workload relate to teaching, research, and administrative responsibilities has led to a noticeable decline in the overall health and well-being of teachers (Bao, 2021) . Similarly, Shui (2022) pointed out that in addition to their daily teaching obligations, teachers in higher vocational colleges are also responsible for student management, administrative tasks, and scientific research, significantly increasing their workload. Especially in economically underdeveloped regions in China, the problem of role overload is more prominent among teachers in higher vocational colleges, which is related to the shortage of local educational resources and the lower status of the colleges (Chen, 2021). It was indicated that in the university-enterprise cooperation model, teachers are required to take on dual roles, not only to be responsible for teaching, but also to act as a bridge between schools and enterprises, coordinating internship arrangements and technical training. This diversity of roles makes it necessary for teachers not only to have solid teaching skills, but also to deal with the management of enterprise affairs, further exacerbating the problem of role overload. These responsibilities require teachers to take on more managerial tasks outside of teaching, putting them under great pressure from role overload (Chen & Li, 2024). With the advancement of vocational education reform, the challenges of teacher’s role overload problems are becoming more complex, and administrators in higher vocational colleges need to optimize role distribution and provide more support to alleviate teachers' role stress.

2.1.6 Research Value of Teachers in Higher Vocational Colleges in Heilongjiang Province

Heilongjiang Province faces distinct challenges in the context of higher vocational education, particularly in fostering teachers' innovative work behavior. Located in the northeastern part of China, Heilongjiang is a region with a unique economic structure, heavily reliant on agriculture and traditional industries, such as manufacturing and energy (Xu & Wang, 2021). The province's economy is significantly dependent on natural resources, which results in specific industrial demands that higher vocational education must address, especially in fields like agricultural modernization, manufacturing upgrades, and energy industry development (Zhao & Li, 2021; Liu et al., 2025). As of 2025, Heilongjiang has 38 higher vocational colleges, which are central to the region's efforts to equip the workforce with skills for its economic development (Heilongjiang Provincial Department of Education, 2025). These colleges contribute greatly to local economic growth and technological innovation.

However, the rapid development of modern industries, particularly emerging technologies such as artificial intelligence and the internet of things, presents significant challenges for teachers in these vocational colleges. To keep up with these advancements, teachers are under immense pressure to continuously update their knowledge and teaching practices (Xu & Wang, 2021). For instance, precision management in modern agriculture demands expertise in intelligent devices, while the transformation of manufacturing requires advanced skills in robotics programming and digital manufacturing (Chen et al., 2021). Unfortunately, the fast pace of technological change creates a gap between teachers' current skills and the knowledge required for these emerging fields, hindering their ability to innovate and teach relevant, industry-aligned content (Zhao & Li, 2022).

Several factors contribute to these challenges. First, many teachers lack systematic training and access to resources, making it difficult for them to integrate new technologies into their teaching practices (Chen et al., 2021). Additionally, Heilongjiang's relatively slow economic growth limits access to advanced technological resources, exacerbating the regional disparity between education and industrial development (Xu & Wang, 2021). Furthermore, the absence of effective incentive policies diminishes teachers' motivation for innovation, particularly in economically underdeveloped areas where resources are scarce (Chen et al., 2021). These factors—technological advancements,

resource constraints, and insufficient policy support—interact to impede teachers' ability to innovate in their educational practices.

In light of these challenges, investigating the factors influencing innovative work behavior among teachers in Heilongjiang's vocational colleges is crucial. Not only will this study help address the specific challenges faced in this region, but it will also offer valuable insights that could be applied to other regions with similar economic and educational contexts.

2.2 Parent Disciplines

2.2.1 Job Demands-Resources Model

The job demands-resources (JD-R) model , since its introduction, has become one of the most influential theories in the fields of management and organizational behavior. The JD-R model was first proposed by Demerouti and published in the journal Applied Psychology. This article 'The job demands-resources model of Burnout' introduced two key factors at work—job demands and job resources—and explained how they affect employees' psychological health and job performance through different pathways (Galanakis & Tsitouri, 2022). Over the past two decades, the JD-R model has rapidly developed into one of the most widely applied theoretical frameworks in organizational behavior research (Lesener et al., 2020). The core idea of the JD-R model is that the characteristics of any job can be categorized into job demands and job resources （ Roskams et al., 2021).

Job demands refer to those aspects of the job that require continuous physical, psychological, and social effort from employees, resulting in certain physical and psychological costs (Demerouti & Bakker, 2023; Grover et al., 2018). Typical job demands include work overload, time pressure, role conflict, and job insecurity. In general, job demands represent the "negative" aspects of the job and are primarily associated with energy consumption and sources of stress (Lu et al., 2024). In this study, technostress is considered as a job demand because when teachers perceive techno-stressing conditions, they have to exert more physical and psychological effort to cope with this technology-related stressor (Wang et al., 2022; Akar, 2024). Role overload is also regarded as a job demand in JD-R model since that excessive responsibilities faced by teachers result in

physiological and psychological costs, leading to strain (Tang & Vandenberghe, 2019; Abdou et al., 2024).

In contrast, job resources refer to those factors that help employees achieve work goals, reduce the negative effects of job demands, and promote personal growth and development (Granziera et al., 2021). Job resources not only enhance work motivation but also help employees better cope with high demands at work. Job resources can be categorized into multiple levels, including organizational resources (e.g., salary, career opportunities, organizational climate), interpersonal resources (e.g., colleague support, feedback from leaders), task-related resources (e.g., task autonomy, skill variety), and personal resources (such as self-efficacy, optimism, self-esteem, resilience) (Pansini et al., 2023). In this study, resilience can be seen as a personal resource that helps teachers quickly adapt and reduce resource losses when facing stressful situations (Cai et al., 2024). Also, innovation climate is often considered as a key organizational resource in the JD-R model which provide autonomy that fosters creativity and intrinsic motivation, helping employees manage job demands, reduce stress, and enhance performance (Demircioglu, 2023).

In recent years, some studies have further verified the dual-process framework provided by the JD-R model. The health impairment process suggests that high-intensity job demands can lead to energy depletion, which may lead to strain, ultimately negatively impacting employees' physical and mental health as well as reduced outcomes (Montani et al., 2020). For instance, when employees continuously face work overload, role conflict, and time pressure, it may result in emotional exhaustion and work neglect (Bakker & Vries, 2021). In contrast, the motivation process indicates that job resources can enhance work motivation and engagement, leading to positive work outcomes such as higher job satisfaction, organizational commitment, job performance and innovative work behavior (Koroglu & Ozmen, 2022). In this study, emotional exhaustion is regarded as a stress-related strain that mediates the relationship between job demands and negative outcomes (Borst, 2022). On the other hand, intrinsic motivation is viewed as a motivational factor that mediates the relationship between job resources and positive outcomes (Moon et al., 2020; Liang et al., 2022).

The JD-R model has undergone several significant expansions and developments. The original JD-R model focused on explaining job burnout, proposing that high job

demands and low job resources are the primary causes of emotional exhaustion and reduced self-efficacy (Tung & Lee, 2024). The core characteristics of job burnout include emotional exhaustion, depersonalization, and diminished feelings of accomplishment. In 2004, researchers further expanded the JD-R model to include work engagement, defined as a fulfilling and positive state of work, characterized by vigor, dedication, and absorption (Faiz et al., 2024). Work engagement reflects employees' enthusiasm and focus on work, serving as the conceptual opposite of job burnout. Researchers further expanded the JD-R model to include personal resources, emphasizing the importance of employees' positive psychological traits such as self-efficacy, optimism, self-esteem, and resilience in coping with job demands (Grover et al., 2018). These personal resources not only enable employees cope with high-demand work environments more effectively but also promote work motivation by enhancing their confidence and sense of control (Bakker & Demerouti, 2023).

The JD-R theory has been widely applied across various fields, particularly in the study of work stress, employee performance, and behavior (Koroglu & Ozmen, 2021). Early research primarily focused on how job demands and resources influence employees' psychological health and job burnout. In organizational behavior research, the JD-R model has been utilized to examine how stressors and resources within the work environment interact to impact employee work engagement and performance (Naqshbandi et al., 2024). More recently, the JD-R model has been widely applied in the study of innovative work behavior, especially in the field of educational management, shedding light on how job demands and resources affect innovative work behavior (Kwon & Kim,2020; Cao et al.,2020; Hassan et al., 2024).

Especially in the study of teachers' IWB, the application of JD-R theory has gradually increased. Research by Xu (2019) and Torp et al. (2018) showed that teachers often experience emotional exhaustion due to heavy teaching workload. However, when schools provide sufficient innovation support and resources, teachers are more likely to engage in teaching innovation. It was further emphasized by Khan and Shamsi (2022) that work resources such as an innovation climate and social support play a significant role in alleviating teachers' work stress and enhancing IWB. Similarly, it was pointed out by Dixit and Upadhyay (2021) in their study of higher education teachers in India that job resources

such as work autonomy and rewards enhance teachers' work engagement, further promoting IWB.

In the broader context of vocational education, the JD-R theory has also been validated. It was demonstrated by Messmann et al. (2017) that job resources such as colleague support and innovation support can significantly alleviate work pressure and enhance teachers' innovative performance. Similarly, according to Cao et al. (2020), teaching-research conflict positively predicted teachers' emotional exhaustion, while work resources like teaching autonomy reduce their feelings of exhaustion and stimulate their work engagement.

Based on the JD-R theory, this study constructs a theoretical model of the factors influencing IWB of higher vocational college teachers. First, technostress and role overload are regarded as job demands in the JD-R theory. Technostress reflects the pressure teachers feel from the application of technology, which increases their emotional burden (Pansini et al., 2023). Role overload refers to the pressure teachers experience when taking on multiple tasks and is also regarded as an important job demand (Tang & Vandenberghe, 2021). Meanwhile, resilience and innovation climate in this study are regarded as job resources in the JD-R theory. Resilience, as a personal resource, helps teachers cope with a high-pressure work environment (Lu et al., 2024). Career future time perspective, which can be viewed as a job resource, enables teachers to focus on long-term career goals, thereby enhancing their motivation and fostering IWB (Kelleher, 2024). Innovation climate, as an organizational resource, can promote IWB by enhancing their intrinsic motivation (Xu et al., 2022). Additionally, emotional exhaustion is regarded as a stress-related strain, while intrinsic motivation is viewed as a motivational factor. Therefore, this study utilizes the JD-R theory to construct a nuanced framework that captures the effects of job demands (technostress and role overload) and job resources (resilience, career future time perspective, innovation climate) on teachers' IWB, mediating by emotional exhaustion and intrinsic motivation.

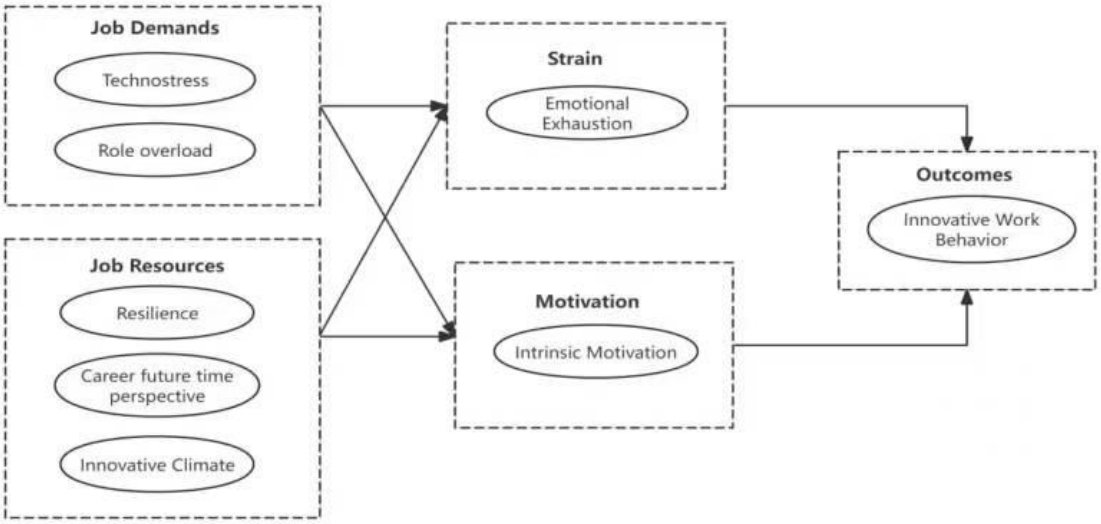

Figure 2.3 Theoretical model based on the JD-R model

Source: Author's own elaboration based on Demerouti and Bakker (2023)

2.2.2 Conservation of Resources Theory

The conservation of resources theory (COR), proposed by Stevan Hobfoll in 1989, is a widely recognized stress theory that explains how individuals manage and cope with stressful situations (Hobfoll et al., 2018). Since its inception, COR theory has been extensively applied across fields such as organizational behavior, occupational health psychology, and management, providing valuable theoretical insights into work burnout, job stress, and innovation behavior (Lackey et al., 2025). The core premise of COR theory is that individuals have an inherent tendency to acquire, protect, and maintain resources, and that the loss of these resources leads to stress and anxiety (Coatman, 2022; Su & Li, 2025). The theory's fundamental assumption is that individuals are motivated by the basic needs of survival and environmental adaptation, driving them to acquire and protect valuable resources.

Within COR theory, resources are seen as essential elements for coping with stress, achieving goals, and maintaining well-being (Merino, 2021). Resources were defined by Hobfoll et al. (2021) as anything that individuals value or that helps them attain valued outcomes. They were further categorized into four types: material resources (e.g., money, housing, transportation), condition resources (e.g., marriage, career status, social relationships), individual characteristic resources (e.g., self-esteem, confidence, optimism), and energy resources (e.g., time, knowledge, physical stamina). Building on

this, the definition of resources was refined to highlight that resources encompass not only objective elements but also the subjective perceptions of individuals (Kraus et al., 2025). The value of resources lies in their ability to help individuals meet goals and achieve desired outcomes.

COR theory provides a series of hypotheses and principles to explain the emergence of stress and its effects on individuals (Hobfoll et al., 2018; Bardoel & Drago, 2021). The theory posits that stress occurs in three primary situations: when existing resources are threatened, when resources are actually lost, and when the investment of resources fails to yield expected returns (Rai & Agarwal, 2019). Moreover, COR theory introduces the "loss dominance principle," which states that the negative effects of resource loss are much greater than the positive effects of resource gain (Guo et al., 2021). Studies have shown that individuals react more intensely and for a longer duration to the loss of resources compared to the acquisition of resources, which explains why individuals are more likely to experience anxiety, burnout, and emotional exhaustion when facing stressful situations (Sheng et al., 2023). In addition to the loss of resources, COR theory emphasizes the importance of resource investment (Bickerton & Miner, 2023). According to this principle, individuals invest their existing resources to acquire new resources, thereby reducing stress and enhancing their ability to adapt to their environments.

Recently, researchers have expanded their focus to include the interaction of resources and the role of environmental factors in resource management. Hobfoll' s concept of resource caravans and passages introduced highlights that resources do not operate in isolation but interact and are influenced by the surrounding environment (Park et al., 2024). Organizations need to cultivate a culture that encourages the active utilization of resources, or else these resources may remain untapped. Additionally, researchers have explored the dynamic process of resource accumulation and depletion, particularly how resource changes unfold over time (Peter et al., 2025). Studies on the "resource loss spiral" and "resource gain spiral" have shown that resource loss can trigger further losses, trapping individuals in a negative cycle, while resource gains accumulate more slowly but tend to build resilience and innovation capabilities over time (Lu et al., 2023). However, spiral dynamics are inherently temporal. Therefore, this study does not claim to test loss or gain spirals directly. Instead, this study aims to examine cross-sectional associations that are theoretically consistent with resource depletion and resource investment processes.

In this study, COR theory is applied to examine the direct effects of technostress, role overload, resilience, career future time perspective, and innovative climate on teachers' IWB. This study utilizes a resource-based perspective to explain how teachers manage and invest their resources over time. According to the loss dominance principle in COR theory, the impact of resource loss is stronger and more immediate than the impact of resource gain (Hobfoll et al., 2021). When teachers experience technostress or role overload, the rate of resource depletion increases, leading to higher psychological and cognitive demands. Once the pressure exceeds a certain threshold, the loss of resources prompting teachers to enter a resource conservation mode (Zhang et al., 2023). In this mode, they prioritize essential teaching tasks and reduce the resources allocated to innovation. This process provides a theoretical foundation for understanding the negative relationship between these stressors and IWB.

Teachers need to invest cognitive, emotional, and time resources to engage in innovation (Lambriex-Schmitz, 2023). Resilience, career future time perspective, and an innovative climate are key work resources that help teachers effectively manage and invest these resources. For instance, teachers with higher resilience are less likely to fall into a resource loss process when facing work stressors; instead, they recover more quickly and continue to engage in innovative activities (Bardoel & Drago, 2021). Similarly, CFTP encourages teachers to view their career from a long-term perspective, making them more willing to invest resources in innovation without being deterred by short-term stress (Park et al., 2021). Moreover, the resource gain spiral can explain how work resources produce long-term positive effects on IWB (Brunetto et al., 2024). According to COR theory, once individuals gain initial resources, they are more likely to continue investing in resources, which leads to the accumulation of additional resources and enhances their ability to innovate (Bardoel & Drago, 2021). Teachers in an innovative climate are more likely to receive organizational support, such as more opportunities to experiment, collaboration with colleagues, and recognition from management (Pradesa et al., 2023; Stumbrienė, 2024). These accumulated resources not only boost their innovation capabilities but also increase their willingness to invest further in innovative work. Thus, work resources not only help teachers cope with short-term stress but also, through the resource gain process, enhance their long-term motivation for innovation and, in turn, drive IWB.

Furthermore, the resource caravan principle emphasizes that resources are interconnected and mutually reinforcing (Nguyen et al., 2025). This suggests that personal resources (such as resilience and CFTP) and organizational resources (such as an innovative climate) do not independently affect IWB, but instead work together to support and enhance each other. For example, resilient teachers are more likely to leverage organizational resources for innovation, while a supportive innovative climate further amplifies the value of personal resources, making teachers more willing to invest time and energy into innovation (Cai & Tang, 2021). In other words, when personal and organizational resources form a stable "resource caravan," teachers' IWB becomes more sustainable.

In this study, COR theory is applied to examine the direct effects of technostress, role overload, resilience, career future time perspective, and an innovation climate on teachers' IWB, highlighting how resource depletion or accumulation directly impacts IWB. The COR theory complements by explaining how teachers manage resources over time. It emphasizes that resource depletion due to stressors can lead to a resource loss spiral, where teachers prioritize routine tasks over innovation. However, personal resources like resilience and career future time perspective, along with organizational resources like an innovation climate, facilitate resource accumulation, enhancing long-term IWB. Together, these theories offer a comprehensive framework: the JD-R model highlights the immediate effects of stressors and resources on IWB, while COR theory provides insight into the ongoing management of resources that sustains innovation over time.

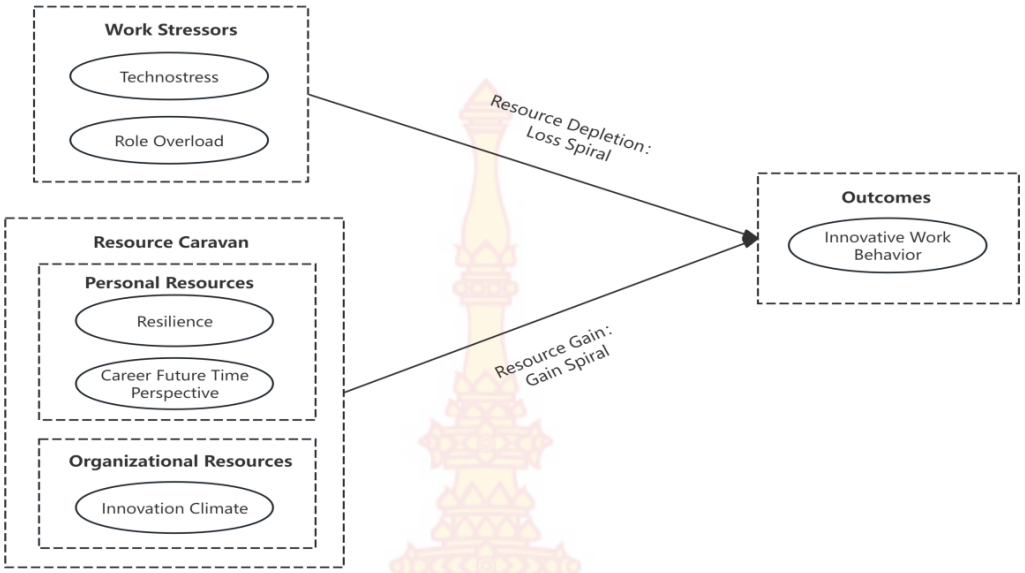

Figure 2.4 Conceptual model based on the COR theory
Source: Author's own elaboration based on Moon (2024)

2.3 Immediate Disciplines

This study involves eight variables: technostress, role overload, resilience, career future time perspective, innovation climate, emotional exhaustion, intrinsic motivation, and innovative work behavior.

2.3.1 Technostress

Technostress is a term coined by clinical psychologist Craig Brog in 1984, describing the stress experienced by individuals who cannot adapt to the introduction of new technologies in a healthy way (Kassim et al., 2021). Brog's pioneering research laid the foundation for understanding how ICT technologies trigger psychological and behavioral issues in users. The definition was further expanded to include that technostress can encompass any negative effects on attitudes, thoughts, behaviors, or psychology caused directly or indirectly by technology (Kiassi and Jahidi, 2023). Technostress is defined as an adaptive issue that arises when individuals are unable to effectively cope with or adapt to the use of information and communication technologies (Nastjuk et al., 2024). This stress can lead to dissatisfaction, fatigue, anxiety, and overwork, which in turn negatively affect individual productivity (Ranathunga & Rathnakara, 2022). Technostress is a negative consequence of using technology, where fear of using ICT leads to stress,

resistance, anxiety, and hostility (Nastjuk et al., 2024). Technostress is considered the unease and psychological pressure employees experience when they feel disconnected from or ill-prepared to use technology in the organization (Verma, 2024), or it can also be understood as the negative psychological relationship between individuals and technology (Sareen, 2019). This study adopts the definition of technostress from Tarafdar et al. (2007), as it has been widely used in studies in educational contexts to explore the pressures teachers face when using technology during the teaching process (Boyer-Davis, 2022; Li & Wang, 2021; Dong et al., 2020).

Previous studies have identified five categories of techno-stressors: techno-overload, techno-invasion, techno-complexity, techno-insecurity, and techno-uncertainty (Pothuganti, 2024). These stressors reflect the multifaceted nature of technostress. Techno-overload refers to the pressure individuals feel when they have to handle more tasks than usual, with high-performance information technology exacerbating the task burden. Technology invasion leads to blurred boundaries between work and life, increasing the conflict between personal time and work tasks. Techno-complexity describes how individuals feel frustrated and helpless when they lack the skills or knowledge to operate new technological tools. Techno-insecurity arises from concerns that technological advancements may threaten their jobs or roles. Techno-uncertainty highlights the continuous pressure of learning that comes with the frequent updates in technology (Califf & Brooks, 2020; Keshavarz, 2025; Wang & Zhao, 2023). These techno-stressors interact to create the sources of stress that individuals experience during technology use. In this study, technostress is understood as an overall perceived level of technology-related stress (Sharma et al., 2024).

Recent studies have regarded technostress as a job demand in the JD-R model（ Pansini et al., 2023; Pothuganti, 2024; Scholze & Hecker, 2024). When employees experience technostress, they need to exert more “physical and/or psychological” effort to cope with the stress caused by technology, as it is typically associated with negative outcomes (Sharma, 2024). This model defines technostress as a demand that continuously consumes individuals' cognitive and emotional resources, requiring employees to constantly adapt to technological updates and manage complex systems (Pothuganti, 2024). The positioning of technostress as a work demand was confirmed by Pansini et al. (2023) in their systematic literature review. They pointed out that when organizational

resources are insufficient to alleviate technostress, it leads to negative consequences for employees' behaviors and psychological states, such as lower job satisfaction and emotional exhaustion. Accordingly, the prolonged or chronic exposure to technostress creators, coupled with inadequate recovery opportunities, depletes individuals' physical and mental resources (e.g., energy, concentration, or time) which may result in negative stress-related outcomes, such as job burnout and psycho-physical symptoms (Nastjuk et al., 2024). The stress caused by ICT is a unique work demand that requires employees to continuously invest and adapt mentally (Scholze and Hecker, 2023). These studies suggest that in modern work environments, technostress is a typical work demand within the JD-R model.

As workplace reliance on technology increases, the related research on technostress has expanded across various fields, including information systems, psychology, organizational behavior, and education (Kumar, 2024). Recent studies have shown that technostress is a major source of stress for teachers (Li & Wang, 2021). Teachers' technostress can be conceptualized as a modern, technology-related condition that undermines teachers' capacity to adapt to the increasing use of digital tools in instructional practices, thereby reducing their ability to cope effectively and perform their professional duties (Dong et al., 2024). More specifically, it refers to the stress, pressure, or discomfort teachers experience when using new technologies—such as devices, platforms, digital media, or technology-driven changes to teaching modes throughout the teaching and learning process (Zheng et al., 2024). Teachers experiencing technostress often perceive that technology has significantly altered their work habits, methods, and teaching practices (Califf & Brooks, 2020). The negative consequences of technostress can be physiological, psychological, social, and organizational, which can lead to problems such as reduced intentions to use ICT (Wang & Zhao, 2023), diminished organizational commitment (Hessari et al., 2024), lower work performance (Bourlakis et al., 2023), declined job satisfaction (Fernández, 2023) and resistance to innovation (Zhang, 2023; Wu et al., 2022; Song et al., 2023). Consequently, technostress could be a critical factor influencing higher vocational college teachers' IWB.

2.3.2 Role Overload

The concept of role overload was first introduced by Rizzo et al. (1970) to explain the sources of stress individuals experience within organizations (Huang et al., 2021). They argued that role overload occurs when individuals are required to manage work tasks that exceed their capacity or available resources. Role theory provides the theoretical foundation for research on role overload, which is viewed as one of the three main dimensions of role stress, alongside role ambiguity and role conflict (Alyamy & Cheong, 2020). Role overload was also defined as the pressure individuals feel when their time, abilities, and other personal resources are insufficient to fulfill the expected job duties (Rafique, 2023). Employees often face multiple role expectations in the workplace, and when they lack the necessary resources to fulfill these expectations, role overload occurs. Role overload occurs when the collective demands of multiple roles exceed the individual's available time and energy resources, preventing them from fully meeting the requirements of various roles. In recent years, the definition of role overload has expanded from traditional task load stress to a broader range of work environment stressors (Huo & Jiang, 2023). Especially in high-intensity work environments, such as healthcare, education, and business management, the impact of role overload becomes more pronounced (Ahmad et al., 2024). In the education sector, teachers are required to perform multiple tasks such as teaching, research, and administrative management, leading to an increased sense of role overload (He, 2020). Meng and Wang (2018) revealed that role overload is a major predictor of career stress for university teachers in China.

From a social interaction perspective, the conservation of resources theory can be used to explain the mechanisms of role. This theory posits that when an individual's time, energy, and other resources are insufficient to meet role demands, they experience stress, ultimately leading to resource depletion (Eslami et al., 2023). The loss of resources has a more significant impact than the gain of resources, making the negative effects of role overload particularly strong. Research on role overload has gradually integrated with psychological stress models, especially in the Job Stress Dual-Path Model, where role overload is viewed as a "stressor" that leads to a decline in job performance by depleting emotional and cognitive resources (Huang et al., 2021). In recent years, the job demands-resources (JD-R) model has become one of the key frameworks for studying role overload. Based on the JD-R model, some studies have argued that role overload functions as a

hindering work demand and provided evidence of its negative effects (Tang & Vandenberghe, 2019; Abdou et al., 2024; Pathardikar et al., 2023). It was pointed out by Ahmad et al. (2024) that role overload is a source of stress within work demands that continuously depletes an individual's resources, leading to stress and burnout. Research has confirmed that role overload harms individuals' mental well-being (Duxbury et al., 2018). It was indicated by Huang et al. (2021) that role overload includes both challenge stressors and hindrance stressors. Challenge stressors can trigger higher work motivation and performance, but they may also become hindrance stressors if they exceed an individual's capacity. Previous studies have shown that role overload is closely linked to various negative outcomes in the workplace, including job burnout, emotional exhaustion (Apenteng et al., 2022; Huang et al., 2021), job performance (Zhang et al., 2022; Tang & Vandenberghe, 2021), work engagement (Pathardikar et al., 2023), job satisfaction (Mittal & Bhakar, 2018), off-role performance (Huang et al., 2021), and innovative work behavior (Clarke & Higgs, 2020; Montani, 2018).

2.3.3 Resilience

The concept of "resilience" originates from the Latin word resilire, meaning "to rebound" or "to return to the original state" (Vella & Pai, 2019). Over time, the definition of resilience has evolved from being viewed as a static trait to a dynamic, adaptive process. Initially introduced by Block and Block, resilience was defined as an individual’s ability to adapt when confronted with stress, challenges, or adversity (Grygorenko & Naydonova, 2023). This early definition laid the groundwork for subsequent research and conceptual development. In contemporary psychological research, resilience is increasingly understood as a malleable, developmental process that unfolds over time. It involves not only the ability to adjust to difficult circumstances but also the capacity to enhance one’s adaptive skills in response to adversity (Bergeman & Nelson, 2024). More recently, resilience has been defined as the ability to overcome difficulties and flexibly adapt to environmental stressors, whether physiological or psychological in nature (Bonanno et al., 2024). Resilient individuals are more likely to internalize positive emotions, which facilitates their recovery from stressful experiences and enhances their overall psychological well-being. This adaptability is commonly recognized as a key psychological resource, with core traits such as self-efficacy, optimism, and effective stress management (Fullerton et al., 2021).

Empirical research has demonstrated that individuals with higher levels of resilience exhibit greater adaptability and are more capable of leveraging adversity as an opportunity for personal growth (Ramos-Diaz et al., 2019). Conversely, individuals with lower resilience are more susceptible to the detrimental effects of unfavorable environments, often remaining passive rather than actively working to improve their situation (Sarrionandia et al., 2018; Li & Hasson, 2020). These findings underscore the critical role of resilience in promoting long-term well-being and effective coping with stress and adversity.

The theoretical foundation of resilience is rooted in various psychological frameworks, with psychological capital theory being one of the key theories explaining the mechanisms underlying resilience (Karimi et al., 2023). Psychological capital encompasses four core psychological resources—hope, self-efficacy, optimism, and resilience—that collectively enable individuals to cope with work stress and enhance both personal and organizational performance (Bidi et al., 2024). As a critical component of psychological capital, resilience helps individuals sustain positive performance by regulating emotions and coping abilities, particularly in high-pressure situations (Elahi et al., 2024). According to the job demands-resources (JD-R) theory, personal resources are a combination of psychological and cognitive traits associated with resilience, alongside an individual's perceived ability to influence and manage their environment, especially in challenging circumstances (Demerouti & Bakker, 2023). Resilience enables individuals to preserve psychological health and enhance work engagement, particularly in high-pressure work settings (Nguyen et al., 2025). Employees with higher resilience not only manage stress effectively in demanding occupations but also demonstrate greater adaptability and creativity during organizational change (Zhou & Zheng, 2022). Within the JD-R framework, resilience is recognized as a vital personal resource that enables individuals to adapt quickly and regain work effectiveness when confronted with complex work situations. This role of resilience has been further validated by Ferreira and Gomes (2021), who emphasize its critical importance in the JD-R model.

In the field of educational management, where occupational stress is high, teacher resilience implies that teachers are able to adapt to situations by making adjustments and improving their ability to cope with unfavorable conditions (Li, 2023). Resilience has been described as the process by which teachers seek solutions to overcome challenging

situations related to academic or professional environments (Fadli et al., 2020). Teachers who are more resilient are typically able to quickly find a balance between situational demands and behavioral responses when encountering difficulties or setbacks in the teaching and learning process, and quickly recover from the challenges and setbacks they face (Baruani et al., 2021). Higher levels of resilience provide teachers with the positive energy needed to overcome stressful work environments. Teachers with strong resilience are able to cope with complex teaching situations by regulating emotions and adopting positive behavioral strategies (Li, 2023). Previous studies have shown that resilience plays an important role in teachers' creative performance (Deng et al., 2020).

2.3.4 Career Future Time Perspective

The concept of future time perspective originates from the socioemotional selectivity theory, which posits that individuals perceive future time differently, and this difference influences their motivation and goal priorities (Reed, 2025). Future time perspective is the core construct of this theory and describes individuals' perception of the remaining time in their lives and their psychological representation of the future (Mohsin et al., 2024). This concept was extended to the career domain by Park et al. (2021), introducing career future time perspective, which emphasizes an individual's perception of their future career, expectations of success opportunities, and the connection between current activities and long-term career development. In simple terms, career future time perspective reflects an individual's awareness of their career future in the present. Employees with a broad career future time perspective tend to place greater importance on their career development, understand the significance of their current work, and look forward to multiple opportunities for success in their careers (Fasbender et al., 2019).

The role of career future time perspective in regulating workplace behavior and improving job performance has been widely recognized (Hai & Park, 2024). Employees with a strong career future time perspective tend to be more future-oriented, actively engaging in their current work to promote the achievement of their long-term career goals (Zhang et al., 2024). Studies have shown a positive correlation between employees' perception of their future careers and key work outcomes such as job performance, as career future time perspective serves as a motivating factor (Wang et al., 2024). Additionally, research has found that individuals' perceptions of their future career influence goal-setting and self-regulation processes (Andre et al., 2018). Employees with

high career future time perspective are more likely to set long-term career goals and are motivated to engage in behaviors that help achieve these goals.

Moreover, recent research highlights the role of career future time perspective in mitigating the negative effects of work stress. It was found that career future time perspective buffers the negative impact of pandemic-related anxiety on employees' service and helping behaviors by enhancing intrinsic motivation (Hai & Park, 2024). Employees with high career future time perspective tend to engage in approach-oriented behaviors, which help them overcome challenges and maintain positive work engagement, ultimately contributing to career success. Despite the growing recognition of its importance, research on its influence on IWB remains limited (Mrisho, 2023). Since innovation often requires long-term commitment and perseverance, individuals with a strong career future time perspective may be more inclined to engage in proactive, future-oriented behaviors to foster innovation. Therefore, further exploration of the role of career future time perspective in shaping innovation-oriented behaviors is of significant research value.

2.3.5 Innovation Climate

Innovation climate has become an important concept in organizational behavior research, gaining increasing attention from scholars in recent years (Ye et al., 2022; Jiang et al., 2023; Lee & Jung, 2024). Innovation climate refers to the shared perception of the extent to which processes and practices within a team or organization support innovation, including leadership support, resource availability, team collaboration, and tolerance for failure (Jiang et al., 2023). It was proposed that innovation climate is the extent to which organizational members perceive support for innovation, measured through two aspects: support for innovation and resource provision (Ozsoy, 2022). According to Oke et al. (2013), innovation climate is defined as the degree to which an organization encourages and builds an atmosphere that supports innovation (Musenze et al., 2024).

Innovation climate is often viewed as a key organizational resource in the JD-R model (Schaufeli et al., 2020; Bakker et al., 2023). The long-term impact of innovation climate as a key organizational resource in the JD-R model was examined by Hakanen et al. (2021) . They found that a sustained innovation climate not only improved employees' job satisfaction but also significantly enhanced their innovative work behavior. Research showed that innovation climate has a significant impact on employees' work attitudes and behaviors, which affects job satisfaction (Demircioglu, 2023) and work engagement (Song

et al., 2024). Previous studies have indicated a positive relationship between innovation climate and individual's mental health and a negative correlation with measures of occupational stress and perceived stress (Fischer & Riedl, 2022). A culture of tolerance for failure in an innovation climate can alleviate employees' stress and anxiety during the innovation process, as they no longer fear punishment for failure (Lin, 2023). Furthermore, studies have found a strong positive correlation between innovation climate and employee behaviors, such as creative behaviors (Cai, 2024), knowledge-sharing behaviors (Lei, 2024) and innovative work behavior (You et al., 2022; Huang & Li, 2021).

2.3.6 Emotional Exhaustion

Emotional exhaustion was first proposed by Maslach and Jackson (1981) as one of the three core dimensions of burnout, with the other two being depersonalization and reduced personal accomplishment (Nápoles, 2022). Emotional exhaustion is considered the first step in the progression of burnout, and is regarded as the core or central component of burnout (Edú-Valsania, 2022). It was originally defined by as a state in which an individual feels their emotional resources have been overused and they are unable to continue meeting work demands in the face of work pressure (Benk & Kenek, 2023). This definition was expanded by linking emotional exhaustion to the COR theory, suggesting that emotional exhaustion is a stress response triggered by resource loss (Rice & Reed, 2022). In particular, emotional exhaustion reflects the point at which individuals perceive themselves to be emotionally overextended.

Emotional exhaustion is recognized as an important variable within the JD-R model, where it is understood to result from an imbalance between high work demands and low work resources (Proulx, 2022). According to the JD-R model, emotional exhaustion occurs when work demands exceed an individual's ability to cope, leading to the depletion of emotional and psychological resources. The formation mechanism of emotional exhaustion is explained by the model: when work demands are too high and resources are insufficient, employees' emotional resources are rapidly consumed, ultimately resulting in emotional exhaustion (Giauque & Weissbrodt, 2021). Although strain may take multiple forms, this study focuses on emotional exhaustion because innovative work behavior relies more directly on emotional and psychological resources than on physical energy alone. In educational contexts, recent studies have continued to identify emotional exhaustion as a central form of teacher strain and a highly relevant

mechanism linking work demands to innovation-related outcomes (Wang et al., 2024; Gkontelos et al., 2023).

Emotional exhaustion has significant negative impacts on various aspects of an individual. Previous studies showed that continuous depletion of emotional resources causes employees to feel dissatisfied with their work environment, lowering their enthusiasm and engagement (Bakker & De Vries, 2021). The depletion of emotional resources leads to reduced work engagement, especially in innovative work behavior, where employees require substantial emotional support (Xu & Jia, 2022). Innovative work behavior have high demands for resource consumption, and thus, in cases of emotional exhaustion, employees are less likely to engage in innovative work behavior (Koroglu & Ozmen, 2022). It was observed by Liu et al. (2020) that as work load increases and emotional resources deplete, employees show lower creativity and engagement in innovative tasks. This study emphasizes the negative impact of emotional exhaustion on innovative work behavior, particularly in modern high-demand work environments. In the field of educational management, many studies have regarded emotional exhaustion as the primary dimension of teacher's burnout (Skaalvik, 2017; Voss et al., 2017).

2.3.7 Intrinsic Motivation

Motivation is a psychological attribute that explains why individuals behave in specific ways (Fishbach & Woolley, 2022). In organizational environments, motivation is a key driver of employees' high performance. It has been noted that understanding the factors that drive employees toward their goals can make motivation an effective tool for achieving organizational objectives (Manzoor et al., 2021). Intrinsic motivation is a specific type of motivation that arises from an individual's interest, without external influences (Siyal et al., 2021). Several authors have defined intrinsic motivation (Birdi et al., 2016; Chiu, 2017; Ritala et al., 2020). They all emphasized that intrinsic motivation is the tendency to perform a specific activity due to intrinsic interest, satisfaction, or positive challenge, rather than external rewards. The opposite of intrinsic motivation is extrinsic motivation, which involves a person making efforts to complete tasks in order to obtain external rewards or avoid punishment (Broeck et al., 2021). Intrinsic motivation is crucial for fostering innovation, as innovative work behavior is not a routine task but involves the discovery and implementation of novel ideas (Siyal et al., 2021).

Intrinsic motivation can serve as a key mediator in the motivation pathway of the JD-R model (Moon et al., 2020). The JD-R model suggests that personal resources help employees foster their intrinsic motivation for growth, learning, and development, which in turn leads to them accomplishing job outcomes. Thus, it is expected that intrinsic motivation will act as an important mediator in the impact of personal resources on IWB. Moreover, Intrinsic motivation is functionally similar to work engagement, which is a motivational state characterized by vigor, dedication, and absorption (Aldabbas et al., 2022). Although both intrinsic motivation and work engagement can stimulate individuals to engage in change-oriented behaviors, they differ in the specific components of the motivational state. Work engagement represents the general energy and satisfaction during work tasks (i.e., the "what" of motivation), while intrinsic motivation focuses more on the reasons driving this positive, energetic response (i.e., the "why" of motivation) (Mantoni, 2021).

Previous research showed that when work resources are sufficient, employees' intrinsic motivation levels increase, leading to higher job satisfaction, innovative work behavior, and overall work-related performance (Siyal et al., 2021). Particularly in high-demand work environments, employees with high levels of intrinsic motivation exhibit greater cognitive flexibility and perseverance, enabling them to handle work pressure more effectively and demonstrating higher innovation capacity (Lasisi et al., 2024). In the motivation pathway, intrinsic motivation acts as a bridge between work resources and positive work outcomes. When employees receive supportive resources, their intrinsic motivation is activated, leading to higher levels of work initiative and creativity (Nili & Tasavori, 2021). Based on the JD-R model, the study conducted by Xu et al. (2022) examined the mechanisms through which work resources facilitate employees' IWB, with a particular focus on the mediating role of intrinsic motivation. It was found that intrinsic motivation significantly mediated the relationship between work resources and IWB, with this effect being especially pronounced under conditions of task complexity.

2.3.8 Innovative Work Behavior

Since the 1990s, research on IWB has gradually expanded, leading to the development of a broad theoretical framework and empirical studies (Van et al., 2022; AlEssa & Durugbo, 2022). The earliest definitions of IWB emphasized the intentional introduction of new ideas. The definition of IWB was proposed by West and Farr as

purposeful behavior aimed at introducing and applying creative ideas to improve organizational performance through new ideas, processes, or products (Srirahayu et al., 2023). A further definition of IWB was the behavior of individuals intentionally introducing beneficial new ideas in the workplace, emphasizing the individual contribution to innovation (Parveen & Reddy, 2024). However, at this stage, research on IWB primarily focused on idea generation, without exploring how these ideas are supported and promoted within organizations.

The multi-stage nature of IWB was first proposed by Scott and Bruce, who identified idea generation, alliance building (gaining support), and implementation as key stages, illustrating the pathway from idea creation to its realization (Husana & Velasco, 2023). The definition of IWB was further enriched to a multi-dimensional behavioral process related to idea generation, promotion, and implementation, making IWB more actionable in specific work contexts (Manalo et al., 2024). Recent definitions have emphasized that IWB is an autonomously driven, change-oriented behavior, encompassing idea generation, opportunity exploration, promotion, and implementation, thereby reflecting the multi-dimensional nature of IWB in complex work environments (Lambriex-Schmitz, 2020).

By now, innovative work behavior (IWB) has evolved from a single behavior to a complex process model encompassing multiple stages, fully demonstrating the pathway of innovation within organizations. Specifically, IWB primarily includes three key stages including idea generation, idea promotion, and idea implementation (Santiago, 2023). Idea generation is the starting point of innovation, where employees identify innovation opportunities and generate new ideas. Idea promotion involves employees spreading and advocating for these new ideas within and outside the organization to gain support and resources. Idea implementation refers to putting these ideas into practice, making them part of the organization's workflows (Messmann & Mulder, 2020). These three stages are interdependent, and the absence of any one stage can lead to the failure of the innovation process (Parveen & Reddy, 2024).

Although IWB is typically seen as a multi-stage process, an increasing body of research supports operationalizing IWB as an unidimensional construct. It was indicated by De Jong and den Hartog (2010) that empirical evidence for the distinctiveness of multiple IWB dimensions is often weak and that the dimensions tend to be highly

correlated. This view is consistent with previous studies which suggested individuals may engage in any combination of these stages of innovative work behavior at a given time. Workplace innovation is typically nonlinear, iterative, and recursive, such that individuals shift back and forth among innovation-related behaviors rather than progressing through clearly separable stages (Mahdzir et al., 2026; Bos-Nehles et al., 2017). This concern is particularly salient in educational settings, where teachers' instructional innovations are often embedded in recurring classroom cycles and continuous feedback, and where developing, communicating, and adapting ideas frequently occur in an intertwined manner (Thurlings et al., 2015). Accordingly, when the research purpose is to explain teachers' overall propensity to engage in innovation-related actions, treating IWB as a unidimensional construct offers a parsimonious and coherent approach.

The rapidly changing technology and highly competitive, uncertain environments force organizations to explore factors that influence employees' IWB. Empirical studies have revealed various factors influencing IWB, including individual factors, organizational contextual factors, and job characteristics (Alessa & Durugbo, 2021). Firstly, individual factors are key components influencing IWB, including personality traits, attitudes, cognitive styles, and psychological motivation (Arini et al., 2024; Srirahayu et al., 2023). For instance, research has shown that intrinsic motivation is a significant driver of individuals' IWB (Bawuro et al., 2019; Anzarwati, 2021). Secondly, the overall atmosphere and culture of an organization and organizational support are widely recognized as critical factors influencing IWB (Volery & Tarabashkina, 2021). An open and inclusive organizational environment encourages employees to proactively explore and implement new ideas, whereas pressure and competition in the organizational environment may suppress employees' innovation intentions. Lastly, job characteristics, such as job autonomy, complexity, and challenge, also have a significant impact on employees' IWB. Highly autonomous jobs motivate employees to take initiative, driving innovation, while complex and challenging tasks can stimulate creativity and problem-solving abilities (Shakil et al., 2023). Research has shown that moderate job stress can act as a motivator for innovation, but excessive stress may lead to resource depletion and hinder IWB (Xu et al., 2024).

In the ever-evolving educational environment, teachers' IWB not only enhances student learning outcomes but also contributes significantly to institutional development

(Thurlings et al., 2015; Lambriex-Schmitz, 2020). In higher vocational education, IWB involves more than experimenting with new teaching methods; it also encompasses the adoption of technological innovations and collaboration with external stakeholders such as industry partners to enrich the learning experience (Messmann et al., 2017; Hosseini et al., 2021). However, prior research on the antecedents of IWB among higher vocational college teachers remains limited. This study further explores the factors that influence innovative work behavior among teachers in higher vocational education settings.

2.4 Conceptual Model and Hypothesis Development

2.4.1 Conceptual Model

Figure 2.5 shows the conceptual model of the study. Building on the JD-R framework and COR theory, technostress and role overload are conceptualized as job demands, whereas resilience, career future time perspective, and innovation climate are treated as job resources at the personal and organizational levels. Emotional exhaustion and intrinsic motivation are positioned as the primary explanatory pathways through which these demands and resources are expected to shape teachers' innovative work behavior (IWB).

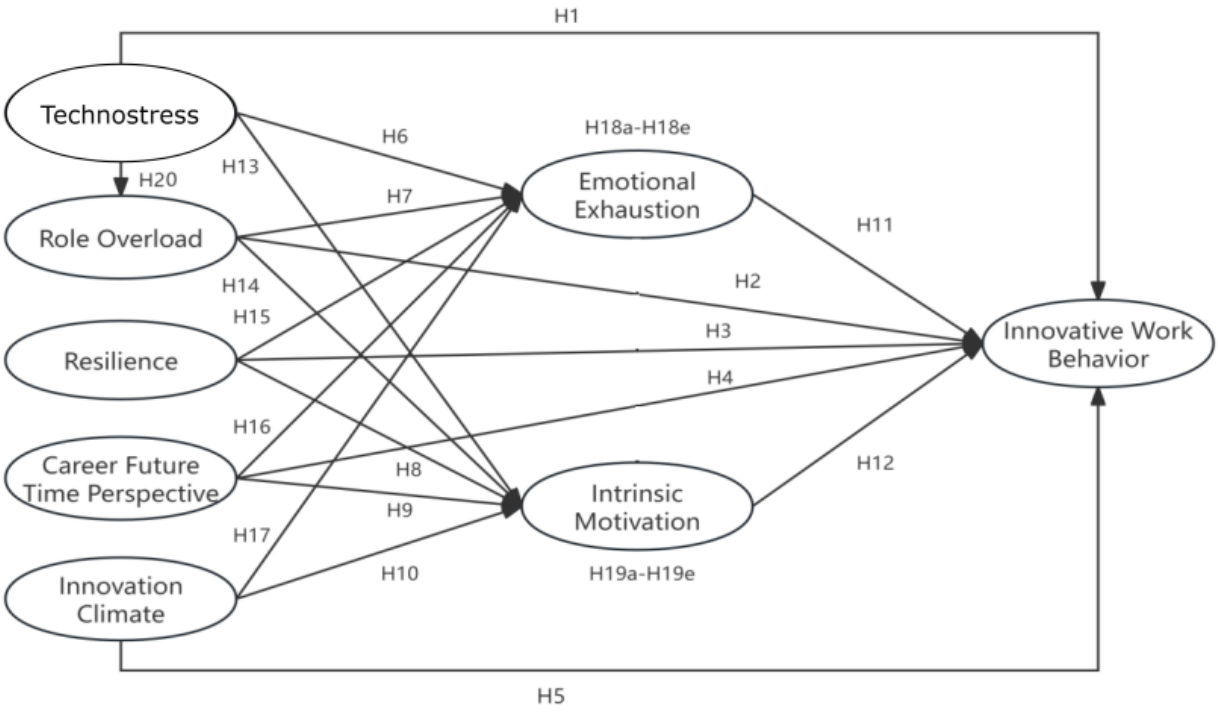

Figure 2.5 Conceptual model of this study

2.4.2 Hypothesis Development

Drawing on established theoretical foundations and prior empirical findings, twenty hypotheses are proposed in this study. These hypotheses are articulated in detail in the following sections.

2.4.2.1 The Relationship between Technostress and Innovative Work Behavior

Previous research has shown that when employees are unable to cope with technostress in a proactive and effective manner, negative work outcomes can be anticipated (Harris et al., 2022; Chandra et al., 2019; Bourlakis et al. 2023). Technostress arises when individuals are unable to effectively cope with the demands of technology in their work environment. It encompasses five dimensions: techno-overload, techno-complexity, techno-uncertainty, techno-insecurity, and techno-invasion (Lopes et al., 2024). These dimensions individually and collectively can undermine cognitive, emotional, and behavioral resources, ultimately inhibiting employees' innovative capacity and motivation (Wu, 2022). Excessive task demands, complex technological systems, and a constantly evolving technological landscape contribute to a state of resource depletion, making it difficult for employees to innovate (Chandra et al., 2019).

Previous research on how technostress affects IWB is limited, and the findings have been inconsistent. Some studies suggested that technostress can hinder innovation by inducing stress, anxiety, and a reluctance to take risks (Chang et al., 2024; Rohwer et al., 2022). In contrast, other research suggests that, under certain conditions, technostress may function as a "challenge stressor", motivating individuals to overcome technological obstacles and stimulate innovation (Dong et al., 2024). However, this positive effect is often contingent upon the availability of organizational resources and support. When these resources are insufficient, the negative consequences of technostress tend to outweigh its potential to drive innovation. Therefore, the relationship between technostress and IWB remains complex and requires further investigation.

In the context of education, particularly among teachers, technostress has been found to significantly affect work behavior. Studies show that techno-complexity and techno-uncertainty—key dimensions of technostress—negatively impact teachers' innovative work behavior, especially for those with limited technological skills (Wu et al., 2022). Teachers experiencing technostress may adopt conservative teaching methods,

thereby hindering the adoption of innovative technologies and pedagogical approaches (Califf & Brooks, 2020; Pansini et al., 2023). Without adequate technical support and training, teachers are less likely to experiment with new teaching tools and strategies, which directly affects their willingness to innovate. Based on these findings, it can be inferred that technostress may be one of the important factors influencing the innovative work behavior of higher vocational college teachers. Therefore, this study proposes the following hypothesis:

H1: Technostress has a negative effect on innovative work behavior.

2.4.2.2 The Relationship between Role Overload and Innovative Work Behavior

As the complexity of the work environment and task demands increase, role overload has become a typical source of work stress (Tang & Vandenberghe, 2021). Existing research has shown that role overload is closely related to various negative outcomes at work, including innovative work behavior (Clarke & Higgs, 2020; Montani et al., 2020; Rafique et al., 2022). Based on the COR theory, the impact of role overload on employees' innovative work behavior in the public sector were examined by Clarke and Higgs (2020). Their findings indicated that role overload has a dual effect on IWB. On one hand, role overload has a positive effect, as employees may adopt innovative work behavior as a coping strategy when faced with high work demands. On the other hand, role overload may indirectly suppress IWB by weakening perceived organizational support. However, more studies suggested that role overload, as a source of stress, leads to the depletion of individuals' psychological and emotional resources (Apenteng et al., 2022; Malik & Siddiqui, 2022; Huang et al., 2021). This depletion of resources is likely to weaken an individual's ability and motivation to engage in innovative activities.

According to the COR theory, when an individual's resources are excessively consumed, their primary goal is to protect the remaining resources, rather than invest in new creative activities. As personal resources are continuously depleted, individuals tend to reduce their involvement in additional activities and fail to focus on creative tasks that require substantial resources (Li et al., 2025). In such cases, an individual's innovative capacity may be directly weakened due to a lack of sufficient cognitive resources. Previous research has found that role overload reduces employees' task performance, thereby affecting innovation (Apenteng et al., 2022). When individuals are forced to dedicate all

their energy to completing basic tasks, their engagement and cognitive space for creative tasks are greatly reduced (Van Essen et al., 2022). Therefore, in the long term, role overload may lead to outcomes that suppress IWB.

However, existing studies have given little attention to the direct inhibitory effect of role overload on teachers' IWB. In the teaching profession, higher role overload means that teachers must handle complex teaching tasks, assessments, and management responsibilities, thereby reducing opportunities to focus on teaching innovation (Rafsanjani et al., 2021). According to Huang et al. (2021), based on the Behavioral Inhibition System (BIS) theory, found through a time-lag study of full-time teachers that role overload triggers withdrawal behaviors (a typical BIS response), which negatively impacts teachers' extra-role performance. Innovative work behavior is often considered an extra-role performance (Reijseger et al., 2017; Kwon & Kim, 2020). From this, it can be inferred that role overload negatively affects teachers' IWB through its impact on their extra-role performance. Therefore, based on the above findings, this study proposes the following hypothesis:

H2: Role overload has a negative effect on innovative work behavior.

2.4.2.3 The Relationship between Resilience and Innovative Work Behavior

Resilience is commonly defined as an individual's capacity to recover quickly from adversity, stress, or failure (Luthans et al., 2007). As a core dimension of psychological capital, resilience is considered an adaptive and reconstructive internal resource that enables individuals to maintain performance—and even grow—under pressure (Youssef & Luthans, 2007). In academic literature, two dominant perspectives exist regarding the nature of resilience: one views it as a relatively stable personality trait—where some individuals are inherently more capable of bouncing back from adversity—while the other considers it a psychological state that can be cultivated through training and experience (Lebares et al., 2018). Compared to trait-based views, the state-like conception of resilience holds greater practical significance for organizations, as it implies that resilience can be developed through supportive environments and targeted interventions.

In the workplace, resilience manifests as a proactive coping response to challenging or stress-inducing conditions (Turek, 2020). Individuals with high resilience are typically more willing to take risks, more creative, and more open to trying new

approaches. In educational settings, teachers face a range of stressors, including student behavior issues, administrative workload, curriculum reforms, and the need to adapt to emerging technologies (Khlaif et al., 2023). From the persepctive of conservation of resources (COR) theory, individuals who perceive resource loss or threat tends to adopt resource investment strategies when they possess strong internal resources such as resilience (Hobfoll, 2011). Resilient teachers are more likely to persevere through resistance or setbacks in the innovation process, mobilizing psychological energy to explore new methods rather than withdrawing or avoiding challenges. For instance, Deng et al. (2020) indicated that teachers with higher resilience adapt more quickly to changes in educational policy and demonstrate stronger innovation capability.

In the literature on innovative work behavior (IWB), resilience has been assigned various roles. Some studies conceptualize it as a moderator, explaining how personal traits or environmental factors relate to IWB (Jaingam et al., 2024). Other studies have treated resilience as a direct antecedent of IWB, with findings consistently supporting a positive link between resilience and IWB (Reddy & Chan, 2022; Suhandiah et al., 2023), thus providing a theoretical foundation for this study. For instance, Uppathampracha (2022) found a significant positive correlation between employee resilience and IWB in the banking sector. Similarly, it was investigated by Srimongkolkul et al. (2025) that resilience influences employees' job performance and IWB in Thailand's transportation and logistics industry. Nevertheless, prior research has largely concentrated on corporate or healthcare settings, while empirical investigations on resilience in high-stress professions such as teaching remain limited. Addressing this gap, the current study identifies resilience as a key predictor of IWB among higher vocational college teachers. This study proposes:

H3: Resilience has a positive effect on innovative work behavior.

2.4.2.4 The Relationship between Career Future Time Perspective and Innovative Work Behavior

Future time perspective describes an individual's cognitive evaluation of their remaining time and how they mentally envision the future (Carstensen et al., 1999; Kooij et al., 2018). It plays a pivotal role across diverse life domains, shaping their motivational drive, decision-making, behavioral patterns, and personal well-being. The socioemotional selectivity theory (SST) provides the theoretical foundation for

understanding how future time perspective shapes workplace attitudes and behaviors (Mrisho & Gwaltu, 2023). People who possess a strong future time perspective typically emphasize long-range planning and outcomes (Carstensen et al., 1999). They are inclined to evaluate the potential future consequences of their behaviors and based their choices on anticipated goals and aspirations. Motivated by expectations of forthcoming opportunities, they teand to devote more time and energy to pursuits long-term ambitions (Lens et al., 2012).

In recent years, scholars have adapted the structure of future time perspective to the workplace and proposed the domain-specific construct of career future time perspective. Career future time perspective captures an individual's focus on future career development, expectations of success, and perception of the connection between current work and future career goals (Park et al., 2021). How individuals perceive their career future influences their goal-setting and self-regulation in professional contexts (Fasbender et al., 2019).

Empirical studies have shown that employees' outlook on the future is related to their innovative work practices. However, empirical research specifically examining the direct impact of career future time perspective on IWB remains limited. Most existing studies have treated career future time perspective as a moderating variable that conditions the effects of other predictors. For instance, Park et al. (2021) found that career future time perspective acts as a moderating factor in the relationship between daily affect and innovative service behavior. Yet, few studies have directly examined the link between career future time perspective and IWB, especially among teachers. When teachers perceive a strong connection between their future selves and present actions, they are more likely to regard innovation as an investment in long-term career development—thus increasing their likelihood of engaging in innovative work behavior. Teachers with a strong future outlook are more inclined to experiment with new teaching methods and pursue innovation (Ertaş and Pekmezci, 2025). This study proposes the following hypothesis:

H4: Career future time perspective has a positive effect on innovative work behavior.

2.4.2.5 The Relationship between Innovation Climate and Innovative Work Behavior

Many studies have confirmed that an innovation climate is a key factor in promoting employees' IWB (Ye et al., 2022; Vuong, 2023; Huang & Li, 2021; Song et al., 2024). The innovation climate typically refers to employees' perceptions of organizational support for innovation, including innovation orientation, policies, and resource allocation (Shanker et al., 2017). This perception not only affects employees' attitudes and behaviors but also shapes their tendency to innovate at work. It has been proposed by Afsar and Umrani (2020) that a supportive innovation climate leads to increased engagement in innovative work practices, such as idea generation and implementation, by fostering greater openness to new ideas and proactivity in exploring new opportunities. In such a setting, adequate resources would be made available, new ideas would receive organizational support, mistakes would be tolerated, and creative conduct would be rewarded (Musenze et al., 2024). Therefore it can inspire individuals to engage in innovative activities at work and facilitate the occurrence of IWB. IWB is not limited to the generation of ideas but also includes promoting new ideas to gain support from colleagues and superiors, as well as implementing these ideas (Ayoub et al., 2023). The presence of an innovation climate can provide favorable conditions for employees to generate and promote new ideas. Organizations with a strong innovation climate support the development of novel and useful ideas, challenge old ways of doing things, and encourage employees to learn from others within and outside the organization (Abbas, 2024). A meaningful and supportive innovation climate enhances employees' innovation motivation and work-related innovation behavior by reducing their perceived risks in the innovation process. In contrast, in organizations lacking supportive atmospheres, employees tend to feel that their ideas are not worth considering or fear being criticized or ridiculed for proposing poor ideas, which suppresses their innovation motivation (Vuong, 2023; Ye et al., 2022).

Existing research showed that innovation climate significantly promotes employees' IWB. In an organization with an innovation climate, employees are more willing to share knowledge, which further drives the occurrence of IWB (Ye et al., 2020). It was pointed out by Bogilović et al. (2021) that the innovation climate, by encouraging team members to share information and propose new ideas, especially in diverse teams,

can stimulate innovative work behavior and reduce conflicts while enhancing creative thinking through promoting employees' cognitive openness. According to Shanker et al. (2017), the innovation climate, by providing freedom and support, motivates employees to explore new ways of working, thus enhancing innovative work behavior. It was also discovered by Dou et al. (2022) that in the face of work pressure, an innovation climate can provide necessary resources and support to help employees cope with challenges and drive innovation. These studies consistently suggested that a supportive innovation climate within the organization is a crucial factor in promoting employees' innovative work behavior.

In the field of educational management, studies have confirmed that the innovation climate in schools has a significant positive effect on teachers' IWB (Awan & Ahmad, 2024; Lambrix-Schmitz, 2020; Hidayat & Patras, 2024). It was pointed out by Sofwan et al. (2021) that the innovation climate created in schools can inspire teachers to try new teaching methods and technologies. According to Chou et al. (2019), the innovation climate in schools significantly promoted teachers' innovative teaching behaviors in Information and Communication Technology (ICT). The stronger the innovation climate perceived by teachers, the more likely they are to adopt innovative technologies in teaching. Especially in higher education, the innovation climate helps teachers break traditional teaching models (Li & Chen, 2020). Previous study has confirmed a positive correlation between the innovation climate in schools and teachers' IWB (Kundu & Roy, 2023). According to Awan and Ahmad (2024), universities' innovation climate also has significant positive relationship with teachers' IWB. Based on these findings, this study proposes the following hypothesis:

H5: Innovation climate has a positive effect on innovative work behavior.

2.4.2.6 The Relationship between Technostress and Emotional Exhaustion

Previous research has found a significant positive correlation between technostress and emotional exhaustion (Wang et al., 2023; Consiglio et al., 2023). Based on the JD-R theory, job characteristics trigger two distinct psychological processes (Demerouti & Bakker, 2023). In the first process, job demands lead to sustained psychological overload, which may ultimately result in burnout (Bakker & de Vries, 2021). Technostress is seen as an important job demand that can trigger the 'health impairment process', where sustained stress leads to a deterioration in health, with

emotional exhaustion being a key manifestation of this process (Zhang et al., 2024). The core characteristic of emotional exhaustion is the "excessive expansion of emotions and depletion of emotional resources" (Sheng et al., 2023). It was found by Wang et al. (2022) that technostress is significantly positively correlated with emotional exhaustion, especially in work environments where information technology is widely applied but technical support systems are inadequate. In such settings, technostress exacerbates individuals' psychological burden and fatigue. When employees deal with multiple sources of technostress, they may experience a loss of physical and emotional resources (i.e., burnout) (Tian et al., 2017).

According to Bourlakis et al. (2023), technostress can indirectly lead to a higher perception of job overload, making individuals feel information fatigue, frustration, low morale, and a loss of motivation, which ultimately leads to emotional exhaustion. When employees face sustained technostress, their cognitive and emotional resources gradually deplete. Based on stress coping theory, it was confimed by Kassim et al. (2021) that the significant relationship between technostress and emotional exhaustion. In the field of educational management, technostress has been found to have a more significant impact on teachers' emotional exhaustion (Alvarez-Risco et al., 2021; Bail et al., 2023). In a constantly changing work environment, learning new complex technologies can lead to feelings of being overwhelmed and exhausted (Skaalvik & Skaalvik, 2017). According to Penado et al. (2021), with prolonged exposure to technostress, teachers become mentally and physically drained. It was also shown by Buenadicha et al. (2022) that due to the widespread use of remote teaching, both students and teachers faced increased technostress, which led to emotional exhaustion and negatively affected teaching and learning outcomes. Based on these findings, this study proposes the following hypothesis:

H6: Technostress has a positive effect on emotional exhaustion.

2.4.2.7 The Relationship between Role Overload and Emotional Exhaustion

Previous research has shown that role overload is a significant stressor associated with various harmful psychological responses, including emotional exhaustion (Wen et al., 2020; Alyamy & Sau, 2020; Huang et al., 2022; Apenteng et al., 2022). Emotional exhaustion refers to a state of fatigue caused by the excessive use of emotional and psychological resources, which are needed to maintain positive emotions for employees' lives and health (Chen et al., 2020). Work-related emotional exhaustion is

considered a stress response triggered by workplace stressors (Lockey et al., 2021). When the time and energy required by job roles exceed an individual's capacity, making it difficult for the role to be fulfilled adequately or comfortably, role overload occurs (Zafar et al., 2024). Role overload depletes an individual's time and energy resources, which may increase emotional exhaustion as part of the individual's stress response to work stressors (Rafique et al., 2023). When the workload and complexity exceed an individual's capacity and time resources, they feel "overwhelmed," and this perception is often accompanied by high levels of anxiety and frustration (Lockey et al., 2021).

Job stress theories and the Affective Events Theory (AET) suggest that prolonged exposure to job stressors such as role overload can trigger negative emotional responses like emotional exhaustion, which can adversely affect individual attitudes and behaviors (Rafique, 2023). In this context, role overload can be seen as a hindrance work demand. When facing overload, employees experience negative emotions such as anxiety and depression and perceive changes in their emotional resources from superficial to deeper levels , leading to emotional depletion (Wang et al., 2024). It was observed by Kilroy et al. (2016) that in their meta-analysis that role ambiguity, role conflict, and role overload were positively correlated with core burnout dimensions, such as emotional exhaustion and depersonalization. According to Tang and Vandenberghe (2021), under high job demands, such as role overload and emotional demands, employees exhibited greater psychological stress. It was also found by Huang et al. (2021) that role overload has a significant negative impact on emotional exhaustion.

In the education management field, several studies support the idea that role overload is a factor leading to burnout, including emotional exhaustion (Kumar & Kamalanabhan, 2017). According to Alyamy and Sau (2020), role overload is a significant predictor of emotional exhaustion for special education teachers based on role stress theory. The effect of role overload on emotional exhaustion in public school teachers was also confirmed by Malik and Siddiqui (2022). Based on the existing research, this study proposes the following hypothesis:

H7: Role overload has a positive effect on emotional exhaustion.

2.4.2.8 The Relationship between Resilience and Intrinsic Motivation

Resilience refers to an individual's ability to adapt in the face of adversity, challenges, and stress (Fey & Kock, 2022), which is not only a coping strategy, but also includes emotional regulation, cognitive adjustment, and the ability to cope with failure. Intrinsic motivation, on the other hand, refers to an individual's drive to perform an activity out of his or her own interest or out of the satisfaction that comes from the task itself (Morris et al., 2022). Intrinsic motivation is particularly important because it inspires individuals to remain consistently motivated and creative despite the lack of external rewards, especially in domains that require innovation (Siyal et al., 2021). The potential impact of resilience on intrinsic motivation, particularly in the area of innovation, deserves attention.

Individuals with high resilience are more likely to maintain higher intrinsic motivation through better emotion regulation (Jolliff & Strubler, 2021). The ability to regulate emotions is a central component of resilience that helps individuals remain calm and focused in the face of stress (Troy et al., 2023). Emotion regulation is also widely recognized as a key factor in the maintenance of intrinsic motivation (Tamir et al., 2016). Moreover, resilience is closely related to the ability to cope with failure and setbacks. Previous research has shown that individuals with high resilience tend not to give up easily when they encounter challenges or failures, but rather view them as opportunities to learn and grow (Fey & Kock, 2022). This positive coping attitude can help them maintain enthusiasm and interest in tasks despite difficult situations, and thus maintain intrinsic motivation, especially in innovative tasks. A study of college students showed that resilience can enhance motivation to learn through emotion regulation, thereby maintaining high levels of intrinsic motivation in the face of demanding tasks (Chen et al., 2022). This finding provides a theoretical rationale for the potential role of resilience in promoting motivation to innovate. According to Wang and Liu (2022), resilience acts as a catalyst for intrinsic motivation, helping learners sustain their drive and remain engaged in learning, even when faced with challenges. Based on the findings of Lohbeck (2018), a significant positive correlation exist between trainee teachers' resilience and their intrinsic motivation to teach. However, there are relatively few previous empirical studies on how resilience affects intrinsic motivation, especially in the field of educational management, and there is a certain research gap. To fill this gap and to verify whether resilience affects

the intrinsic motivation of higher vocational teachers, this study proposes the following research hypotheses

H8: Resilience has a positive effect on intrinsic motivation.

2.4.2.9 The Relationship between Career Future Time Perspective and Intrinsic Motivation

Previous research has shown that future time perspective plays a key role in individuals' motivational systems, influencing their goal-setting, task engagement, and effort levels (Baird et al., 2021). In the career context, CFTP reflects an individual's perception of future career development, including their perception of career opportunities, the importance placed on future career goals, and the connection between current actions and future career development (Park et al., 2021). On the other hand, intrinsic motivation refers to the tendency to engage in behaviors driven by interest, satisfaction, and a sense of meaning derived from the work itself, rather than relying on external rewards (Hoxha & Ramadani, 2024). Existing studies suggested that individuals' perceptions of the future may shape their motivation levels in current work (Cao et al., 2024). However, how CFTP specifically influences individuals' intrinsic motivation and the underlying mechanisms remain underexplored and lack direct empirical support.

Based on COR theory, individuals tend to acquire, accumulate, and protect resources that are valuable to them in order to enhance adaptability and reduce resource depletion (Bickerton & Miner, 2023). In the context of career development, CFTP can be viewed as a key psychological resource that enables individuals to form stable career development expectations and provides greater goal orientation and meaning to current work (Hai & Park, 2024). Individuals with higher CFTP are more likely to view their work as a means of achieving long-term goals rather than simply accumulating short-term tasks (Baird et al., 2021). As a result, their behavior at work tends to be more autonomous, and they experience greater interest and satisfaction derived from the work itself. Specifically, individuals with high CFTP are more likely to establish a clear psychological connection between current work outcomes and future career goals, which gives their daily work higher personal value, leading them experience a stronger sense of career meaning (Kelleher, 2024). Additionally, future-oriented thinking enhances an individual’s sense of control and certainty, making them more likely to respond in a positive way, thus enhancing intrinsic motivation (Gagné et al., 2022). In contrast, individuals with low

CFTP, lacking clear career development plans and confidence, may perceive their current work as unrelated to their future development, leading to a decrease in their interest in work and autonomous drive (Wojtkowska et al., 2021), which in turn may weaken their intrinsic motivation. Although CFTP, as a future-oriented psychological resource, may play an important role in enhancing individuals' intrinsic motivation, there remains a gap in research on how CFTP influences teachers' intrinsic motivation. Based on the above discussion, this study proposes the following hypothesis:

H9: Career future time perspective has a positive effect on intrinsic motivation.

2.4.2.10 The Relationship between Innovation Climate and Intrinsic Motivation

Innovation climate refers to the degree to which an organization encourages and establishes a supportive environment for innovation (Ye et al., 2022). This atmosphere provides employees with opportunities for autonomous innovation and exploration of new methods. Intrinsic motivation refers to the drive to engage in activities due to personal interest and the satisfaction derived from the task itself, without relying on external rewards (Xu et al., 2022). Based on cognitive evaluation theory, external environments transmit information and exert control, thereby influencing an individual's intrinsic motivation (Su & Zhang, 2022). The innovation climate activates resources for intrinsic motivation, creating a mapping effect on intrinsic motivation through transmission, which ultimately results in a transcendent transmission effect for innovative work behavior (Kwon & Sonday, 2024). Organizations with an innovation climate are more inclined to pursue creativity and innovation, allowing members to explore new ideas and tolerating differences among members .

In an innovation climate, managers provide employees with choices and options, allowing them to experience a sense of freedom and autonomy when performing tasks and feel that they can shape their behavior and outcomes according to their own judgments (Nili & Tasavori, 2022). Therefore, employees feel free to pursue their interests and enjoy the process of creating novel solutions within the given range, which enhances intrinsic motivation (Deci et al., 2017). Research has shown that appropriate challenges, constructive feedback, and avoiding disparaging evaluations can increase intrinsic motivation, while negative feedback on performance can reduce intrinsic motivation (Ling

& Soon, 2019). In an innovation climate, managers recognize employees' ideas, beliefs, and viewpoints. Therefore, employees feel that their novel and useful suggestions are not ignored but can be used to improve tasks and decisions (Zhang et al., 2023). As a result, employees feel that they possess the necessary knowledge, skills, and competence to propose new methods of working, which enhances their intrinsic motivation.

However, empirical studies on the impact of innovation climate on intrinsic motivation, particularly in the educational field, remain limited. According to Chen et al. (2024), school innovation support is significantly positively correlated with teachers' intrinsic motivation. This suggested that when schools create an environment that supports innovation, teachers feel that their efforts are recognized, thereby enhancing intrinsic motivation. innovation climate not only increases teachers' sense of engagement but also stimulates their creativity and self-motivation in teaching , which may have a positive impact on intrinsic motivation (Indajang et al., 2023). Therefore, based on existing research findings, this study proposes the following hypothesis:

H10: Innovation climate has a positive effect on intrinsic motivation.

2.4.2.11 The Relationship between Emotional Exhaustion and Innovative Work Behavior

Previous research has shown that emotional exhaustion has a significant negative impact on IWB (Bakker et al., 2020; Saputra & Rozyanti, 2022; Xie et al., 2024). Employees who are emotionally exhausted are more likely to avoid engaging in innovative work behavior to reduce their anxiety and fatigue (Liu et al., 2018; Cao et al., 2020). According to Rafique et al. (2022), in highly stressful environments, the ability to process complex ideas, which is required for innovation, may be disrupted.

From the perspective of COR theory, emotional exhaustion caused by heavy work demands leads employees to minimize their involvement in activities that deplete their resources, further reducing the loss of resources (Lee et al., 2021). As emotional exhaustion depletes an individual's energy, it may interfere with their ability to exert effort, which is a fundamental condition for autonomous behaviors such as innovative work behavior. Engaging in IWB requires not only energy reserves but also more time and effort, and the outcomes are more uncertain and less significant compared to routine tasks (Koopman, 2016). When emotional exhaustion occurs, investing the remaining time and energy into innovative work behavior poses a high risk of further resource depletion,

surpassing the potential for resource accumulation (Bakker & De Vries, 2021). Individuals experiencing emotional exhaustion often feel drained and are less inclined to engage in innovative work behavior, thus pointing to a negative relationship between emotional exhaustion and innovative work behavior.

Based on self-exhaustion theory, previous studies have identified a negative correlation between emotional exhaustion and green innovative work behavior among hotel employees (Wang et al., 2021). This finding is further supported by Liang et al. (2022), who, using the JD-R model, demonstrated that emotional exhaustion inhibits employees' service innovation behavior. Similarly, in the field of educational management, this logic holds true-when teachers experience emotional exhaustion, they become stressed, physically and mentally drained, and lack motivation and clear goals. As a result, they may become disengaged from their organizational roles, including teaching innovation initiatives. Such negative emotions can suppress their innovative work behavior. It was found by Gkontelos et al. (2023) that emotional exhaustion significantly affects the innovative work behavior of in-service primary school teachers, while a similar negative impact on the innovative work behavior of private high school teachers was reported by Jamal et al. (2023). Building on these findings, the following hypothesis is proposed:

H11: Emotional exhaustion has a negative effect on innovative work behavior.

2.4.2.12 The Relationship between Intrinsic Motivation and Innovative Work Behavior

Intrinsic motivation has long been regarded as an important predictor of employees' IWB (Yeap, 2024; Xu et al., 2022). Empirical research has consistently shown that intrinsic motivation has a significant positive effect on innovative work behavior (Chen, 2024; Venketsamy & Lew, 2024; Karadeniz, 2021; Montani, 2021; Su & Zhang, 2022). Employees driven by intrinsic motivation continuously seek new and improved methods in their work (Herbiyanti, 2024). This positive emotion enhances teachers' psychological engagement and energy, enabling them to maintain persistent effort. They often demonstrate greater perseverance when facing challenges (Yeap, 2024). Moreover, employees driven by intrinsic motivation are generally seen as more focused on their tasks, actively seeking alternative solutions or unconventional approaches, and effectively

utilizing existing knowledge (Kim et al., 2021). For example, they are more likely to proactively broaden the range of information they search for and are more receptive to absorbing and assimilating a wider array of ideas.

Self-determination theory suggests that the confidence and interest generated by intrinsic motivation encourage knowledge workers to focus more on improving work efficiency when faced with challenging, complex, and unfamiliar tasks (Xu et al., 2022). Employees with low intrinsic motivation tend to have weaker curiosity and less interest in relatively complex tasks (Montani, 2021). Therefore, such employees may show lower levels of innovative performance in their work. Intrinsic motivation has gradually evolved into a key concept in open cognitive growth, motivating employees to accomplish tasks or challenges to satisfy their interest in skills and curiosity (Yeap, 2024). According to Fischer et al. (2019), once employees are driven by intrinsic motivation, they act for the enjoyment of the work itself, unaffected by external pressure or rewards, and are inclined to engage in innovative work behavior.

Many researchers emphasized that intrinsic motivation has a significant and positive impact on both stages of innovative work behavior (idea generation and implementation) (Chen et al., 2016; Masood & Afsar, 2017; Yu & Meng, 2021; Ali et al., 2022). It was found by Chen et al. (2016) that employees with high intrinsic motivation perform better in cognitive flexibility and persistence, and are more likely to generate innovative and non-traditional solutions. Recent research found that intrinsic motivation is positively correlated with the innovative work behavior of teachers at public universities in Guangxi, China (Chen & Pongtornkulpanich, 2024). According to Chen and Yin (2017), intrinsic motivation significantly influences the innovative work behavior of university teachers in China. Based on these existing studies, this research proposes the following hypothesis:

H12: Intrinsic motivation has a positive effect on innovative work behavior.

2.4.2.13 The Relationship between Technostress and Intrinsic Motivation

As digital technologies continue to reshape the modern workplace, technostress has become an important factor influencing employee motivation (Wang et al., 2023). Technostress refers to the discomfort individuals experience when coping with the complexity, pace of change, or usage demands of technological systems (Salazar-Concha et al., 2021). Although it has been widely confirmed that technostress negatively

affects employees' work performance, emotional states, and well-being (Ali et al., 2023; Jaiswal, 2024; Wang & Yao, 2025), its impact on intrinsic motivation has not been systematically examined.

Based on COR theory, individuals tend to acquire, accumulate, and protect resources they value in order to enhance their ability to cope with external stressors (Hobfoll et al., 2018). When facing technostress, individuals often need to continuously invest cognitive, emotional, and time resources to cope with the rapidly changing technological environment (Sharma & Gupta, 2023). This process can lead to resource depletion, which in turn affects their psychological state and behavioral tendencies. In such resource-limited situations, individuals are more likely to adopt resource protection strategies, such as reducing work engagement and shrinking work motivation, in order to avoid further resource loss (Verwaeren & Nijstad, 2024). From this perspective, it can be hypothesized that increased technostress weakens employees' positive psychological engagement with work, thereby inhibiting their intrinsic motivation. Compared to an active work orientation driven by interest and meaning, individuals with limited resources are more likely to perceive work as an additional burden rather than a source of satisfaction (Chen et al., 2024). Therefore, technostress may erode employees' intrinsic drive on a deeper level.

Although empirical research directly examining the impact of technostress on intrinsic motivation is still scarce, existing literature provides indirect support for this relationship. For example, it was found by Hessari et al. (2022) that a significant negative correlation between technostress and overall work motivation among employees. Similarly, according to Boyer-Davis et al. (2023), teachers experiencing high levels of technostress in online teaching exhibit lower enthusiasm and engagement. Based on the COR theory and previous empirical evidence, the following hypothesis is proposed:

H13: Technostress has a negative effect on intrinsic motivation.

2.4.2.14 The Relationship between Role Overload and Intrinsic Motivation

Role overload, as a common work stressor, is defined as the extent to which the role demands an individual faces exceed the time or capacity they can handle (Rafiq et al., 2021). It is essentially a situation where the resource demands exceed the available resources, and employees in such situations face high uncertainty regarding performance goals and sustained psychological pressure. Based on COR theory, when an individual's

required resources such as time, energy, and attention are continuously over-utilized, it leads to resource depletion and even resource exhaustion, prompting individuals to adopt resource protection strategies to avoid further loss (Hu et al., 2023). In a role overload situation, individuals may experience high levels of stress and fatigue due to the perception that their current work tasks exceed their capacity to cope (Pluta & Rudawska, 2021). To prevent further resource loss, individuals are more likely to reduce psychological investment, decrease self-regulation behaviors, and avoid proactive work efforts (Qian et al., 2024). Intrinsic motivation, which refers to the intrinsic tendency to engage in work driven by the enjoyment, satisfaction, and meaning derived from the work itself , typically requires a high level of resource availability and psychological engagement (Cheng et al., 2023). However, role overload disrupts this state, making it difficult for individuals to derive enjoyment or meaning from their work, causing them to view work as a burden (Daşkin et al., 2023). Although current research has not directly tested the relationship between role overload and intrinsic motivation, empirical evidence suggests that role overload, as a resource threat, can trigger negative psychological states and potentially suppress positive work motivation (Huo & Jiang, 2023). Based on this, the following hypothesis is proposed:

H14: Role overload has a negative effect on intrinsic motivation.

2.4.2.15 The Relationship between Resilience and Emotional Exhaustion

Previous studies have shown that resilience can alleviate emotional exhaustion (Richards et al., 2016; Zahednezhad, 2021). Resilience, as a psychological resource, helps individuals maintain positive adaptability when facing adversity and high-pressure work environments, thereby alleviating emotional exhaustion and reducing burnout (Brown, 2015). The Job Demands-Resources model by Bakker and Demerouti (2014) pointed out that personal resources can help employees cope with job demands and play a positive role in work-related stress situations. According to Schaufeli (2017), resilience as a key component of the "stress resistance arsenal" provides psychological protection for employees in high-pressure work environments. Highly resilient individuals are those who can cope with and overcome difficulties even when facing problems.

Several studies have shown that resilience can alleviate emotional exhaustion, thereby reducing burnout. According to Lee et al. (2021), there is an interaction between psychological supportive factors such as resilience and depleting

factors such as emotional exhaustion. Their findings confirmed that resilience is negatively correlated with emotional exhaustion. A cross-sectional study conducted by Zahednezhad et al. (2021) among healthcare workers indicated that resilience has a significant negative impact on all dimensions of burnout, emphasizing that resilience is an important factor in protecting healthcare workers from burnout. It was found by Rustamov et al. (2024) that psychological resilience can effectively alleviate burnout in Azerbaijani doctors, especially in the context of emotional exhaustion, where resilience helps doctors cope with the emotional load in their work. In the field of educational management, there is ample evidence that resilience can reduce teachers' role stress, depression, burnout, and intention to quit, thereby inhibiting the likelihood of negative psychological symptoms (Polat et al., 2023). Li et al. (2021) found that there is a negative correlation between the psychological resilience of American sports educators and emotional exhaustion. Additionally, Richards et al. (2019) demonstrated that psychological resilience significantly influences emotional exhaustion among primary and secondary school teachers. Therefore, based on the existing research findings, this study proposes the following hypothesis:

H15: Resilience has a negative effect on emotional exhaustion.

2.4.2.16 The Relationship between Career Future Time Perspective and Emotional Exhaustion

Career future time perspective (CFTP) refers to an individual's perception and evaluation of the future length of their career, potential opportunities, and the subjective value of these opportunities (Hai & Park, 2024). In organizational settings, employees with a higher CFTP typically have a more positive future orientation towards career development, viewing current tasks as key steps toward achieving long-term career goals, and therefore are more focused and engaged (Kooij et al., 2017). In recent years, CFTP has been considered an important psychological resource, especially in high-pressure environments, where it is seen as a key factor in maintaining positive psychological states (Hong, 2025). Emotional exhaustion is a state of resource depletion that occurs when individuals face high work demands, with long-term resource investment exceeding recovery, typically manifesting as emotional fatigue, psychological depletion, and a decrease in coping ability (Ahmad et al., 2024). Emotional exhaustion is a core dimension of burnout and a significant risk factor for employees' mental health (Mijakoski et al., 2022). When employees perceive continuous resource loss and lack recovery

channels, their coping ability and emotional resilience gradually decline, ultimately leading to persistent emotional fatigue.

Empirical research on the relationship between career future time perspective and emotional exhaustion has been relatively scarce. However, studies have explored the relationship between future time perspective and career burnout. For example, it is found by Xie et al. (2024) that future time perspective significantly reduced career burnout levels in clinical nurses. In the education field, the results of previous studies have shown that there is a significant negative correlation between future time perspective and student learning burnout (Yang et al., 2023; Hong et al., 2025). However, limited research has specifically explored the relationship between career future time perspective and emotional exhaustion, leaving a gap in the literature.

Based on COR theory, career future time perspective, which could be regarded as a positive cognitive resource, helps individuals maintain a clear sense of future career goals and direction, thereby reducing negative emotional responses and perceptions of current work stress (Ikram, 2023). Specifically, higher career future time perspective encourages teachers to view current stress as a stage in the process of future career development, thus giving their current work higher meaning and acceptability (Hong, 2025). This future-oriented thinking helps strengthen teachers' goal perseverance and psychological regulation abilities, effectively reducing the likelihood of emotional exhaustion. Based on this, the following hypothesis is proposed:

H16: Career future time perspective has a negative effect on intrinsic motivation.

2.4.2.17 The Relationship between Innovation Climate and Emotional Exhaustion

In high-demand, change-oriented work environments, organizational climate plays a critical role in how employees perceive and cope with stressors. Innovation climate is defined as employees' shared perception of whether the organization encourages, supports, and rewards innovative work behavior (Ye et al., 2022). An innovation-supportive climate typically means that employees are encouraged to try new ideas, take reasonable risks, and learn from failure without fear of punishment. Previous research has primarily focused on the impact of innovation climate on positive work outcomes, such as enhancing creativity and promoting work engagement (Song et al., 2024). However, there

has been limited exploration of whether innovation climate helps alleviate emotional exhaustion. Emotional exhaustion, as a core dimension of burnout, refers to the emotional depletion and psychological fatigue experienced by individuals under sustained work pressure. According to COR Theory, emotional exhaustion often arises from resource depletion when individuals continuously invest resources without replenishment (Stein et al., 2021). In this framework, innovation climate can be viewed as an environmental resource that helps employees maintain or recover psychological resources by enhancing their sense of autonomy, task meaningfulness, and psychological safety, thereby mitigating the occurrence of emotional exhaustion.

Specifically, when employees feel their work environment supports innovation, allows for trial and error, and offers space for independent exploration, they are more likely to feel competent and empowered, reducing stress (Kim & Jung, 2022). Moreover, innovation climate often involves lower bureaucratic constraints, more positive leadership feedback, and stronger team support (Ye et al., 2022), thereby enhancing employees' coping effectiveness and reducing the perception of stressors as threats. These positive contextual factors help employees maintain psychological resilience under high-performance pressure, reduce the risk of resource depletion, and thus decrease the likelihood of emotional exhaustion.

Although direct empirical studies on the relationship between innovation climate and emotional exhaustion are still scarce, preliminary evidence supports a negative correlation between them. For instance, it is found by Giebels et al. (2018) that in high-pressure contexts, supportive and flexible team climates were significantly negatively correlated with employees' burnout levels. According to Liu et al. (2022), there is a significant negative correlation between team-level innovation climate and employees' burnout, with this effect partly mediated by psychological engagement. These findings suggested that an innovation-supportive organizational environment not only brings positive cognitive and motivational impacts but also provides emotional protection for employees in high-demand jobs. Based on the discussion above, this study proposes the following hypothesis:

H17: Innovation climate has a negative effect on emotional exhaustion.

2.4.2.18 The Mediating Role of Emotional Exhaustion

This study also predicts the indirect effect of work demands on IWB through emotional exhaustion. Emotional exhaustion refers to a state in which employees feel that their emotional resources have been overused at work, ultimately leading to energy depletion (Benk & Kenek, 2023). According to the JD-R model, the relationship between work demands and work outcomes is mediated by stress responses, such as emotional exhaustion and burnout (Bakker & de Vries, 2021). Therefore, stress responses are hypothesized as one of the mediating variables between work demands and IWB. Previous research has shown that emotional exhaustion mediates the effect of work demands on work outcomes (Dodanwala & Shrestha, 2021). Huo et al. (2023) validated the mediating role of emotional exhaustion between work demands and employees' IWB. Emotional exhaustion, as a negative psychological state of employees in high-pressure work environments, can undermine their creativity and innovative capabilities. Therefore, emotional exhaustion is a potential influencing factor through which work demands influence IWB.

Based on the JD-R model, this study argues that technostress will inhibit employees' IWB by stimulating emotional exhaustion. According to the JD-R model, technostress is part of work demands, with employees using their limited resources (such as experience or knowledge) to cope with these demands (Pansini et al., 2023). Therefore, high levels of work demands deplete employees' emotional resources. In other words, when employees face the threats posed by technology, they continually expend their physical and mental energy, which requires higher psychological costs. For instance, as technology evolves, employees may face the risk of their jobs being replaced and thus need to exert more psychological effort to manage their emotions and complete their tasks (Hornung & Smolnik, 2021). Once employees feel emotionally exhausted, it becomes difficult to gather enough resources to complete other complex tasks, reducing the likelihood of engaging in high-uncertainty, high-risk innovative work behavior (Liang et al., 2022). In other words, technostress will suppress innovative work behavior by increasing employees' resource depletion. According to Srivastava et al. (2016), when employees face continuous technostress, their cognitive and emotional resources gradually deplete, reducing their motivation to try new methods and technologies, thus inhibiting innovative work behavior. In previous educational management research, emotional

exhaustion is often discussed as a mediating variable connecting work demands to work outcomes (Zhang et al., 2022). Based on the above findings, this study proposes the following hypothesis:

H18a: Emotional exhaustion mediates the relationship between technostress and innovative work behavior.

Based on JD-R model, this study suggests that role overload may suppress employees' innovative work behavior by increasing emotional exhaustion. According to the JD-R model, role overload is considered a significant component of work demands, referring to situations where employees are required to complete a large volume of tasks or handle multiple responsibilities within a short period, thus increasing their workload (Abdou et al., 2024; Ahmad et al., 2024; Pathardikar et al., 2023). Employees typically have limited resources such as time, energy, and knowledge to cope with these overloaded work demands (Pathardikar et al., 2023). When facing role overload, employees must continuously deplete their emotional and psychological resources to meet work demands, leading to resource depletion. Research has shown a significant positive relationship between role overload and emotional exhaustion (Alyamy & Cheong, 2020). When employees face a large number of tasks or complex roles, they feel exhausted due to persistent high pressure, and their physical and mental resources are rapidly consumed. Moreover, role overload not only causes employees to feel psychological stress but also increases role conflict and uncertainty, which further intensifies emotional exhaustion (Montani & Dagenais, 2018).

Emotional exhaustion is considered a key factor affecting innovative work behavior (Liang et al., 2020; Xie et al., 2024). When employees experience emotional exhaustion, they often lack the necessary energy and creative thinking to tackle innovative tasks (Gong et al., 2021). Research has found that emotional exhaustion weakens employees' self-efficacy, making it difficult for them to proactively seek innovation opportunities or engage in innovative actions (Xie et al., 2024). Additionally, emotional exhaustion can lead employees to avoid complex tasks that are high in uncertainty and risk, thereby reducing the occurrence of innovative work behavior (Yu et al., 2022). In the case of role overload, employees' emotional resources are excessively depleted, making it difficult for them to actively participate in innovative activities that require high levels of creativity and risk-taking (Montani et al., 2020). In previous educational research,

emotional exhaustion has often been explored as a mediating factor (Sheng et al., 2023). Based on the above discussion, this study hypothesizes that emotional exhaustion plays a mediating role between role overload and teachers' innovative work behavior. Therefore, the following research hypothesis is proposed:

H18b: Emotional exhaustion mediates the relationship between role overload and innovative work behavior.

Resilience is considered a critical personal resource that helps employees manage work-related stress and mitigate the depletion of emotional resources (Raper et al., 2024). Studies suggested that resilient employees are better equipped to face work challenges, which reduces the likelihood of emotional exhaustion (Kunzelmann & Rigotti, 2021). Emotional exhaustion, a key component of burnout, arises from prolonged exposure to job stress and is characterized by emotional depletion (Demerouti, 2023). High levels of emotional exhaustion lead to fatigue and reduced work engagement, particularly in tasks requiring creativity and innovation.

Emotional exhaustion diminishes employees' motivation and depletes their cognitive and emotional resources, ultimately reducing their innovation capacity (Hornung & Smolnik, 2021). However, resilience, as a positive resource, acts as a buffer, enabling employees to recover emotionally and prevent the onset of exhaustion (Lloyd & Payne, 2019). Employees with higher resilience are better able to maintain emotional stability, even under high job demands, and sustain their innovation motivation. Thus, resilience indirectly promotes innovative work behavior by alleviating the negative impact of emotional exhaustion (Bani-Melhem et al., 2021). Employees with higher resilience are more adept at managing stress, avoiding emotional exhaustion, and enhancing their innovative capabilities. This implies that emotional exhaustion may mediate the relationship between resilience and innovative work behavior. Based on this reasoning, the following hypothesis is proposed:

H18c: Emotional exhaustion mediates the relationship between resilience and innovative work behavior.

According to COR theory, career future time perspective serves as a positive psychological resource that helps employees effectively manage work-related stress and emotional depletion, thereby reducing the occurrence of emotional exhaustion (Park et al., 2021). When employees possess a strong career future time perspective, they are more

likely to focus on long-term career development goals and link current tasks to future objectives (Baird et al., 2021). This future-oriented mindset helps alleviate present pressures and mitigate emotional exhaustion. In addition, socioemotional selectivity theory (SST) suggests that individuals' perceptions and plans for the future influence their emotions and motivation (Carstensen, 2021). Employees with a strong future orientation tend to prioritize accumulating resources for future success, which reduces emotional depletion and helps them maintain positive engagement at work.

Emotional exhaustion typically arises from long-term emotional depletion in the workplace, especially when the resources invested do not yield corresponding returns (Bakker and De Viries, 2021). Employees with a higher career future time perspective are more likely to view current pressures as necessary steps toward achieving long-term career goals rather than immediate drains on their energy (Wojtkowska et al., 2021). Employees with a stronger career future time perspective, by effectively managing and regulating their emotional resources, are able to reduce the occurrence of emotional exhaustion and subsequently foster higher levels of innovative work behavior. Based on the above discussion, the following hypothesis is proposed:

H18d: Emotional exhaustion mediates the relationship between career future time perspective and innovative work behavior.

Innovation climate, as an organizational resource, enhances employees' psychological and emotional resources by providing a supportive environment, thereby reducing the negative impact of emotional exhaustion (Putra & Pramusiwi, 2023). A work environment with innovation-supporting characteristics helps alleviate employee stress and reduces the depletion of emotional resources, thereby lowering the occurrence of emotional exhaustion. This aligns with Social Exchange Theory, which posits that when employees perceive organizational support and resource investment, they are more likely to engage in their work and reduce negative emotional reactions caused by work-related stress (Jolly et al., 2021).

Emotional exhaustion, as a core dimension of burnout, typically occurs when employees face prolonged high work pressure without adequate resource support (Maslach & Leiter, 2022). Research indicated that when employees' emotional resources are continuously drained by ongoing stress, their work motivation and innovation capacity significantly decline (Xie et al., 2024). Therefore, an innovation climate provides

employees with the necessary resources and emotional support, allowing them to effectively manage stress and reduce emotional depletion. This supportive atmosphere helps employees derive more psychological satisfaction and emotional recovery from their work, thereby lowering the degree of emotional exhaustion.

From the perspective of COR theory, innovation climate can be seen as a resource acquisition mechanism. When employees are able to obtain sufficient innovation resources from the organization, they can effectively avoid emotional exhaustion, maintaining high levels of work engagement and innovative work behavior (Rozak et al., 2024). In this context, emotional exhaustion, as a loss of emotional resources, may suppress employees' willingness to engage in innovative work behavior (Zhou & Chen, 2021). In other words, when the innovation climate effectively alleviates emotional exhaustion, employees are more likely to display innovative work behavior, especially when facing high uncertainty and high-risk tasks. Therefore, innovation climate can indirectly promote employees' innovative work behavior by reducing the negative impact of emotional exhaustion. Based on the above discussion, the following hypothesis is proposed:

H18e: Emotional exhaustion mediates the relationship between innovative climate and innovative work behavior.

2.4.2.19 The Mediating Role of Intrinsic Motivation

Based on the JD-R model, this study proposes that resilience, as a personal resource, may promote employees' innovative work behavior through intrinsic motivation. Resilience, defined as an individual's ability to cope with stress and challenges, helps employees maintain a positive attitude and find effective solutions when faced with adversity (Sisto et al., 2019). Research showed that employees with higher resilience are better able to maintain focus and resilience when confronted with complex tasks and environmental uncertainty, thereby enhancing their work performance and innovation capacity (De Clercq & Pereira, 2019). However, the mechanism through which resilience specifically influences IWB remains unclear.

Intrinsic motivation refers to the drive to engage in an activity voluntarily due to interest, challenge, or personal growth, without external rewards (Ryan & Deci, 2020). Employees with higher resilience are often able to maintain a positive emotional state in adversity, which can stimulate their intrinsic motivation, leading them to become more

engaged in their work and willing to take on challenges (Wang & Liu, 2022). Previous studies have shown that intrinsic motivation drives employees to actively seek out opportunities for innovation and be willing to take risks to propose novel solutions (Alessa, 2022). Therefore, when employees with high resilience maintain high intrinsic motivation, they are more likely to engage in innovative work behavior and explore new work methods and ideas.

There has been limited research examining intrinsic motivation as a mediator between resilience and innovative work behavior. Existing studies have demonstrated that intrinsic motivation mediates the relationship between other variables and innovative work behavior. For example, based on the JD-R model, a dual-path model was developed by Liang et al. (2022), and data collected from 317 employees in China's service industry were analyzed. The results showed that intrinsic motivation played a significant mediating role between AI awareness and employees' service innovation behavior. Moreover, in the field of educational management, intrinsic motivation is often explored as a mediating factor (Valentine et al., 2022). Based on the above analysis, this study proposes the following hypothesis:

H19a: Intrinsic motivation mediates the relationship between resilience and innovative work behavior.

According to COR theory, individual resources such as time, emotion, and cognition are crucial for managing work-related stress and challenges (Hobfoll et al., 2018). When individuals perceive a loss of resources, stressors trigger depleting emotions such as emotional exhaustion, which negatively impacts their work performance and innovative work behavior (De Clercq, 2019). In this framework, CFTP acts as a psychological resource that helps employees clarify career goals and generate positive expectations for the future, thereby enhancing their resource management capacity (Park et al., 2021). Employees with a high future time perspective typically view their current tasks as crucial steps toward achieving long-term career goals, which helps them maintain engagement with their work objectives and reduce the emotional resource depletion caused by current work pressures (Li, 2021). Therefore, CFTP, as a cognitive resource, may promote higher work efficiency, particularly in innovative tasks, by stimulating intrinsic motivation.

Self-Determination Theory (SDT) further complements this view. SDT posits that intrinsic motivation arises from an individual's interest in and satisfaction with the work itself, rather than external rewards or punishments (Gagné et al., 2018). CFTP, by providing a clear path for future career development, strengthens employees' commitment to long-term goals (Hai & Park, 2024). This goal-setting and future-oriented mindset help enhance intrinsic motivation (Kholifah et al., 2023). Employees with a higher CFTP are more likely to link their current tasks with future career success, a connection that not only increases their sense of career meaning but also stimulates their intrinsic motivation, thereby fostering innovative work behavior. Therefore, intrinsic motivation plays a critical mediating role between CFTP and innovative work behavior. Based on the theoretical reasoning outlined above, the following hypothesis is proposed:

H19b: Intrinsic motivation mediates the relationship between career future time perspective and innovative work behavior.

Based on the JD-R model, this study further explores how innovation climate influences employees' innovative work behavior through intrinsic motivation. Innovation climate is related to organizational policies, affairs, practices and procedures perceived by individuals, which in turn formulate and shape their priorities and extend to the development of innovation achievements, creativity, service processes and methods to achieve creative skills (Newman et al., 2020; Malibari & Bajaba, 2022). Innovation climate can provide employees with a sense of psychological safety and work support, thereby stimulating their motivation and innovative potential (Jiang et al., 2023). Research showed that innovation climate enhances employees' intrinsic motivation, which in turn improves their innovation performance (Xu et al., 2022). A favorable organizational climate not only enhances employees' sense of belonging but also encourages them to seek challenges and opportunities for personal growth in their work. This motivation makes employees more likely to demonstrate innovative work behavior. According to Ye et al. (2022), an innovation climate encourages members' autonomy and risk-taking spirit, which increases their intrinsic motivation and makes them more willing to engage in IWB. Moreover, research has found that employees with high intrinsic motivation are more proactive in exploring opportunities for innovation, willing to take risks, and try new work methods and ideas (Siyal et al., 2021). Therefore, when the organizational climate

effectively stimulates employees' intrinsic motivation, they are more likely to engage in innovative work behavior, driving innovation in their work .

Although previous research has explored the relationship between organizational climate and innovative work behavior, empirical studies on the mediating role of intrinsic motivation are still limited. Based on the JD-R model, it is found that intrinsic motivation plays a significant negative mediating role between job insecurity and employees' IWB (Montani et al., 2021). In the field of educational management, intrinsic motivation is often used as a mediating variable between external environment and teachers' IWB (Chen et al., 2024). The intrinsic motivation is influenced by organizational innovation orientation and work climate, thereby impacting teachers' IWB (Hosseini et al., 2021). An innovation climate can provide teachers with more resource support, greater work autonomy, and decision-making space, which enhances their intrinsic motivation. With this enhanced motivation, teachers can overcome the limitations of traditional teaching techniques and methods, reflect more personal flexibility and creativity, and display more IWB (Li & Chen, 2020). This provides theoretical support for further exploring the mediating role of intrinsic motivation between organizational climate and innovative work behavior. Therefore, this study proposes the following hypothesis:

H19c: Intrinsic motivation mediates the relationship between innovation climate and innovative work behavior.

According to the JD-R model, technostress and role overload are two primary work stressors that typically deplete employees' emotional and cognitive resources (Pansini et al., 2023; Proulx, 2022). Employees experiencing stressors may feel anxious and overwhelmed, resulting in a decline in intrinsic motivation, which limits their engagement and performance in innovative tasks. Intrinsic motivation, as the core driving force for individuals to engage in innovative work, refers to the behavior driven by the interest, satisfaction, and meaning derived from the work itself (Aiessa & Durugbo, 2022). Employees with higher intrinsic motivation are more likely to actively engage in innovative tasks and derive a sense of accomplishment and satisfaction from their work (Aldabbas et al., 2025). However, when technostress and role overload negatively impact employees' intrinsic motivation, their innovative work behavior typically declines. Therefore, intrinsic motivation plays a crucial mediating role between technostress and innovative work behavior, as well as between role overload and innovative work behavior.

Based on this discussion, the following two hypotheses are proposed:

H19d: Intrinsic motivation mediates the relationship between technostress and employees' innovative work behavior.

H19e: Intrinsic motivation mediates the relationship between role overload and employees' innovative work behavior.

2.4.2.20 The Relationship between Technostress and Role Overload

Previous research has shown that technostress can exacerbate role overload (Mehmood & Arshad, 2023; Callista & Hastuti, 2023). Role overload refers to a state where the perceived role demands exceed an individual's capacity or motivation, typically as a result of role accumulation, meaning that employees are forced to take on a workload beyond their capacity to complete tasks (Tang & Vandenberghe, 2021). According to the transaction-based stress theory, the rapid changes in technology make it more complex, requiring individuals to spend more time learning how to use it, as lack of time and opportunities increases role overload (Reif et al., 2021). The use of technology is also expected to result in high productivity, demanding individuals to complete a large amount of work within limited time and causing them to remain constantly connected and overwhelmed with information, which can lead to role overload (Wang et al., 2022). Complex technological systems exacerbate employees' technostress, forcing them to handle an excessive number of technical tasks within limited time, further intensifying the sense of role overload.

The positive impact of technostress on role overload has been validated in several empirical studies. For instance, the impact of technostress induced by information and communication technology (ICT) on role stress and employee productivity was examined by Jena et al. (2015) using role theory. The results indicated a significant positive relationship between technostress and role stress (including role overload), with technostress directly increasing the sense of role overload and significantly reducing employee work efficiency and productivity. Furthermore, it is found by Mehmood and Arshad (2023) that technostress significantly increased role overload induced by technology in their study of employees in the software industry, further confirming the significant positive correlation between technostress and role overload. In the education sector, it is found that a significant positive relationship between technostress and role overload in their study of high schools in West Jakarta, Indonesia (Callista & Hastuti,

2023). These studies all indicated that technostress, by increasing employees' burden in handling technical tasks, leads to increasing role expectations, which in turn positively affects role overload. Based on the above analysis, this study proposes the following hypothesis:

H20: Technostress has a positive effect on role overload.

Table 2.1 Summary of Hypotheses Proposed by this Study

Hypotheses	Research Hypotheses
H1	Technostress has a negative effect on innovative work behavior.
H2	Role overload has a negative effect on innovative work behavior.
H3	Resilience has a positive effect on innovative work behavior.
H4	Career future time perspective has a positive effect on innovative work behavior.
H5	Innovation climate has a positive effect on innovative work behavior.
H6	Technostress has a positive effect on emotional exhaustion.
H7	Role overload has a positive effect on emotional exhaustion.
H8	Resilience has a positive effect on intrinsic motivation.
H9	Career future time perspective has a positive effect on intrinsic motivation.
H10	Innovation climate has a positive effect on intrinsic motivation.
H11	Emotional exhaustion has a negative effect on innovative work behavior.
H12	Intrinsic motivation has a positive effect on innovative work behavior.
H13	Technostress has a negative effect on intrinsic motivation.
H14	Role overload has a negative effect on intrinsic motivation.
H15	Resilience has a negative effect on emotional exhaustion.
H16	Career future time perspective has a negative effect on emotional exhaustion.
H17	Innovation climate has a negative effect on emotional exhaustion.
H18a	Emotional exhaustion mediates the relationship between technostress and innovative work behavior.

Table 2.1 (continued)

Hypotheses	Research Hypotheses
H18b	Emotional exhaustion mediates the relationship between role overload and innovative work behavior.
H18c	Emotional exhaustion mediates the relationship between resilience and innovative work behavior.
H18d	Emotional exhaustion mediates the relationship between career future time perspective and innovative work behavior.
H18e	Emotional exhaustion mediates the relationship between innovative climate and innovative work behavior.
H19a	Intrinsic motivation mediates the relationship between resilience and innovative work behavior.
H19b	Intrinsic motivation mediates the relationship between career future time perspective and innovative work behavior.
H19c	Intrinsic motivation mediates the relationship between innovation climate and innovative work behavior.
H19d	Intrinsic motivation mediates the relationship between technostress and innovative work behavior.
H19e	Intrinsic motivation mediates the relationship between role overload and innovative work behavior.
H20	Technostress has a positive effect on role overload.

2.5 Conclusion

This study analyzes the theoretical background and relevant research findings on factors influencing higher vocational college teachers' IWB within the context of educational management. Specifically, this study systematically reviews and analyzes recent research on the relationships between technostress, role overload, resilience, career future time perspective, innovation climate, emotional exhaustion, intrinsic motivation, and IWB. This study addresses several key gaps in the literature. First, while technostress and role overload have been studied as job stressors, their specific effects on innovative work behavior (IWB) among higher vocational teachers remain unclear, with inconsistent findings regarding their impact. Second, the role of career future time perspective as a

psychological resource influencing IWB has been largely overlooked, despite its potential to enhance intrinsic motivation and foster proactive innovation. Third, while resilience has been recognized as a critical resource, its role in driving IWB, particularly as a proactive driver, and its relationship with intrinsic motivation has not been fully explored. Also, previous studies have rarely integrated job demands, personal resources, and organizational resources within a unified theoretical framework to examine their collective effects on teachers' IWB in the context of vocational education.

To fill these research gaps, this study proposes a dual-path model based on the JD-R model and COR theory. On one hand, technostress and role overload, as job demands, may inhibit IWB by inducing emotional exhaustion. On the other hand, resilience, career future time perspective and innovation climate, as job resources, may promote IWB by enhancing intrinsic motivation. Therefore, this study particularly emphasizes the mediating roles of emotional exhaustion and intrinsic motivation within this dual-path model. Additionally, this chapter discusses the theoretical basis of the dual-path model and its application within the JD-R framework. Based on this theoretical framework, this study proposes a comprehensive research model. Furthermore, a series of hypotheses based on previous research findings are put forward, providing clear directions for subsequent empirical studies. The detailed design of the research methodology and hypothesis validation will be explored in the following chapters.

CHAPTER 3
METHODOLOGY

This chapter introduces the research methodology in three parts. The first part will explain the research paradigm, including ontology, epistemology, and methodology, and analyze the research paradigm suitable for guiding this study. The second part will introduce the research methods suitable for addressing the three research questions raised in Chapter 1. It will also specifically describe the research design, major data collection method, variables and their definitions, reliability and validity, pilot test, target population, sampling method, sampling size, data collection process, and data analysis. Finally, the ethical issues that may arise during the survey research process will be discussed.

3.1 Overview and Justification of Research Paradigm

A research paradigm refers to the basic belief system or worldview that guides research activities, providing the theoretical or philosophical foundation for the study (Ugwu et al., 2021). The term "paradigm" was introduced by the American philosopher Thomas Kuhn in his seminal work “The Structure of Scientific Revolutions” to describe a philosophical mode of thinking (Riabchenko, 2023). A research paradigm as "a comprehensive belief system, worldview, or framework that guides research and practice in a field" (Omodan, 2024). Furthermore, a paradigm is also seen as a way of viewing the world that shapes a research topic and influences how researchers think about that topic (Paudel, 2024). From the above discussion, it can be seen that a research paradigm constitutes the worldview, abstract beliefs, and principles of a researcher. These beliefs and principles shape how researchers view the world and how they interpret and act within it. It acts as a lens through which researchers view their research topics and conduct their work, based on a particular philosophical foundation. The paradigm guides the entire process of research, including the selection of research questions, setting of research objectives, methodology, and value systems (Khatri, 2020).

In social science research, the selection of an appropriate paradigm is crucial. The chosen paradigm not only establishes the philosophical stance of the researcher but also

deeply influences every decision in the research process, including the selection of methodologies and specific research methods (Mulisa, 2022). Therefore, all research must be based on basic philosophical assumptions about what constitutes "valid" research. Research paradigms guide scientific discovery through their fundamental assumptions and principles, and understanding these assumptions helps improve the quality of research findings and identify potential shortcomings in the process of generating reliable evidence (Park et al., 2020). Without selecting a paradigm as the first step, there would be no foundation for deciding on subsequent research methods, design, and approaches (Okesina, 2020). Researchers have identified various components of paradigms. It was argued that the basic beliefs defining a specific research paradigm can be summarized in responses to three key questions: ontological questions (What is the form and nature of reality), epistemological questions (What is the nature of the relationship between the researcher and the researched), and methodological questions (How does the researcher find what they believe to be the reality) (Ugwu et al., 2021).

Ontology is a branch of philosophy that explores the nature and structure of being, often referred to as the theory of reality (Yulianto et al., 2021). It was stated by Hothersall (2025) that ontology is the philosophy of reality, which concerns the assumptions we make to believe something is meaningful or real, or the essence of the social phenomena. Additionally, ontology involves the aspects of reality present in certain events and objects, and more importantly, it concerns the systems that shape our perceptions of these events and objects. Thus, ontology investigates the nature of existence or reality and the fundamental categories of things and their interrelationships (Adams, 2021). Ontology is critical for helping researchers understand the forms and nature of reality and how they perceive that reality (Trownsell, 2022). Ontology is important to researchers as it provides an understanding of the various things that make up the known world (Fujimura, 2024). It also prompts researchers to reflect on their epistemological and methodological beliefs related to the research question, thus contributing to problem-solving.

Epistemology refers to the study of how knowledge is obtained from different sources and is another key research paradigm, often referred to as the theory of knowledge and philosophy (Sol & Heng, 2022). Epistemology is the philosophy of knowledge or how we acquire knowledge (Yulianto, 2024). In research, epistemology helps understand the cognitive processes involved in knowing something and how truth or reality is identified.

According to Hothersall (2025) epistemology addresses the nature, form, and method of knowledge acquisition, as well as how knowledge is communicated to others. As researchers, acquiring this knowledge is crucial for deepening our understanding of the field under study. The importance of epistemology lies in strengthening trust in data and influencing how researchers uncover knowledge in a specific social context (Khatri, 2020). Moreover, epistemology provides guidelines for researchers to define the scope of the entire study (Kivunja & Kuyini, 2017).

Methodology is the research paradigm concerning how knowledge is systematically obtained and problems are solved, often referred to as the theory of research design and methods (Kumar & Praveenakumar, 2025). Methodology describes the logical flow and process of systematically following a procedure in a research project to gain a deep understanding of the research problem (Dubey & Kothari, 2022). Furthermore, methodology focuses on how the necessary data, knowledge, and understanding are obtained to answer the research questions and contribute to the field of knowledge (Ghanad, 2023). According to Mishra and Alok (2022), the methodological question addresses ‘how the researcher can find what he or she believes can be known’. Thus, the methodological question guides the researcher in seeking answers during the process of addressing the research problem. Therefore, researchers should have a clear understanding of the methodological assumptions they adopt during the research process.

There are three main research paradigms in the social sciences: positivism, constructivism, and critical theory (Gannon et al., 2022). By exploring the philosophical foundations of management research paradigms from the ontological, epistemological, and methodological perspectives, this study will focus on elaborating on positivism, constructivism, and critical theory. Each paradigm has its unique ontological, epistemological, and methodological characteristics, as summarized in Table 3.1.

Table 3.1 Three Basic Paradigms within the Context of Basic Components

Component	Constructivist Paradigm	Positivist Paradigm	Critical Theory Paradigm
Ontology	Relativism: Social phenomena are the result of the interaction between the subject and objective elements (Mulisa, 2022).	Realism: Reality exists independently of the observer (Morgan, 2022).	Realism: Reality exists independently of the observer (Park & Peter, 2022).
Epistemology	Subjectivity: The interaction between the researcher and the research object, with the researcher's beliefs influencing understanding (Charmaz, 2017).	Objectivity: Scientific knowledge is based on solid, verifiable truths (Omodan, 2024).	Subjectivity: Revealing beliefs and practices that limit human freedom, aiming to promote social change (Giroux, 2023).
Methodology	Qualitative methods, interpretive and dialectical, in-depth interviews and observation (Pilarska, 2021).	Quantitative methods, hypothesis deduction, experimental (Ali, 2024).	Dialogical and dialectical, ritical ethnography, critical discourse analysis. (Park & Peter, 2022).

3.1.1 Positivism

Positivism is a research paradigm grounded in the philosophy of science, which emphasizes the acquisition of knowledge through empirical and rational methods (Ali, 2024). The core tenet of positivism is that knowledge is only valid when derived from observable and measurable phenomena, a perspective that aligns with empiricism and scientific experimentation (Maretha, 2023). Positivist research methodologies primarily focus on quantitative analysis, aiming for generalizable findings that can be applied across different settings (Maksimovic & Evtimov, 2023). This approach prioritizes objective

observation and systematic measurement, thus excluding the influence of subjective interpretations and personal biases from the research process (William, 2024). In practice, positivism emphasizes a deductive approach, where researchers begin with theoretical frameworks and derive hypotheses that are then tested through empirical observation (Dehalwar & Sharma, 2023). The process follows a cyclical pattern: researchers formulate testable hypotheses based on literature, collect data through observation or experiments, and then analyze the results to confirm or refine existing theories. The ultimate goal is to contribute to the advancement of theoretical models while providing empirical evidence that strengthens or challenges existing knowledge (Ali, 2024).

Positivist research operates on the assumption that reality exists independently of the researcher and can be objectively observed (Su, 2018). The focus is on uncovering universal laws that govern both natural and social phenomena (Prathapan, 2022). According to positivist thought, all social behaviors and outcomes can be explained through natural laws, thus making quantitative research the preferred method for investigating and explaining these phenomena (Ahmadin, 2022). This methodological orientation underscores the necessity of conducting controlled experiments to isolate variables and eliminate confounding factors, ensuring the validity of the results.Furthermore, positivism places great emphasis on scientific rigor in research, ensuring that subjective biases or researcher values do not interfere with the interpretation of data (Ali, 2024). By adhering to standardized procedures and objective analysis, positivist research aims to generate findings that are both reliable and replicable across different contexts.

In this study, which explores the innovative work behavior (IWB) of teachers in higher vocational colleges, the positivist paradigm is well-suited. This study aims to identify and quantify the impact of factors like technostress, role overload, resilience, career future time perspective, and innovation climate on IWB. Using quantitative methods such as surveys and statistical analysis, this study seeks to establish causal relationships between these variables, contributing to the development of a generalizable theoretical model. This study's focus on empirical data and statistical testing aligns with positivism's emphasis on objective measurement and generalizability. By applying deductive reasoning to derive testable hypotheses, the study follows the positivist

hypothesis-deduction model, ensuring that its findings are rigorous, reliable, and replicable.

3.1.2 Constructivism

Constructivism, as a research paradigm, offers an in-depth understanding and explanation of social phenomena, with its core emphasis on the construction of social reality (Pilarska, 2021). It posits that the meaning of social phenomena depends on how individuals perceive and interpret their surrounding environment. Constructivists focus on the interaction between contextual factors and actors, believing that these elements collectively shape people's understanding of reality (Tanlaka & Aryal, 2025). Unlike positivism, constructivism does not seek universal laws but rather explores the complexity of human behavior in specific contexts (Gannon et al., 2022). Constructivism stresses that the process of knowledge generation is social and formed through interpersonal interactions (Saleem et al., 2021). Researchers, in this process, must also be aware of how their own cultural and historical backgrounds influence their interpretations of the research subject. Constructivism advocates starting from individuals' lived experiences to clarify the nature and meaning of phenomena, aiming to understand how humans construct reality in specific contexts (Burns et al., 2022).

Constructivism adopts a relativist position, suggesting that social phenomena arise from interactions between actors and objective realities within specific environments (MacLeod et al., 2022). This perspective highlights the complexity of human behavior and acknowledges that understanding social phenomena depends on historical and cultural contexts. Epistemologically, constructivism emphasizes subjectivity, where the researcher's beliefs and experiences influence their understanding of the phenomena (Pilarska, 2021). The goal of constructivist research is to deeply understand the context and meaning behind human behavior rather than simply observing or measuring it (MacLeod et al., 2022). Its methodology is primarily interpretive, employing qualitative methods such as in-depth interviews and observations to explore social phenomena in natural settings (Pilarska, 2021). Open-ended questions are particularly effective, enabling participants to freely express their experiences and offering researchers rich insights into participants' perspectives (Lim, 2024).

While constructivism provides insights into the subjective experiences of individuals, it is not the primary paradigm in this study. The research focuses on

quantifying the impact of key factors on teachers' innovative work behavior (IWB), which aligns more with a positivist paradigm that emphasizes objective measurement and causal relationships. However, constructivist approaches could be useful for future research to explore how teachers perceive and interpret innovation in their environments. Qualitative methods could complement this study by offering deeper insights into the lived experiences of teachers and the contextual meanings behind their IWB.

3.1.3 Critical Theory

Critical theory challenges both positivist and interpretivist paradigms, aiming to reveal the beliefs and practices that constrain human freedom (Yahya & Rusdiansyah, 2023). The primary advocate of this paradigm, Jürgen Habermas, worked within the Frankfurt School in Germany and developed an approach of inquiry and action in social sciences (Morelock & Sullivan, 2021). The research within the critical paradigm seeks liberation through changing people's social, political, and cultural environments. It focuses on issues of 'power, control, and epistemological problems as social constructs, which benefit some people while disadvantaging others' (Fuchs, 2021). Additionally, it advocates for collective freedom and social transformation. Researchers are seen as transformative intellectuals who help liberate people from the constraints of historical, psychological, emotional, and social conditions (Buchanan, 2018).

Critical theorists hold a historical realism position. They believe that reality exists, but is influenced by factors such as culture, politics, ethnicity, gender, and religion, which interact to form a social system (Danermark et al., 2019). Epistemologically, critical theory is subjective, as it posits that any study of an object is influenced by the researcher. The goal of critical research is not just to explain or understand society, but to change it (Lawani, 2021). The goal of critical theory is not only to understand society but to transform it, striving for social justice and fairness. Its methodologies, such as critical ethnography, discourse analysis, and action research, aim to address injustice and discrimination within social systems (Cohen, 2017).

This study does not adopt the critical theory paradigm because the core objectives of critical theory do not fully align with the focus of this research. The goal of this research is not to uncover inequality or power relations in the educational system. Instead, the study focuses on teachers' behaviors and psychological responses in a relatively consistent technological and innovation policy environment. Such a context does not meet the typical

research assumptions of resource inequality or institutional oppression in critical theory. In contrast, positivist paradigms better align with the needs of this study.

3.1.4 Paradigm in this Study

Given the two research objectives in this study—to examine the relationships among technostress, role overload, resilience, career future time perspective and innovation climate on teachers' IWB in higher vocational colleges (RQ1), and to verify the mediating roles of emotional exhaustion and intrinsic motivation between technostress, role overload, resilience, career future time perspective, innovation climate, and teachers' IWB in higher vocational colleges (RQ2)—this study adopts a quantitative approach, applying positivist paradigms, to fully address the research questions.

In this study, positivist paradigms is applied because this paradigm emphasizes the objectivity of knowledge, positing that researchers can investigate causal relationships between phenomena through systematic and quantitative methods. Quantitative analysis, which is the primary research approach within this paradigm, focuses on measuring variables and conducting statistical analyses to ensure the reliability, validity, and generalizability of findings (Omodan, 2024). Given that these research questions involve data collection and hypothesis testing through quantitative methods, the positivist paradigm is particularly well-suited for this study. By employing tools such as questionnaires and Structural Equation Modeling (SEM), this approach ensures the elimination of subjective biases, enabling the derivation of objective and generalizable conclusions. Ultimately, the positivist paradigm provides a robust scientific foundation for generating explanations grounded in empirical evidence.

3.2 Methodology

This study adopts a quantitative research approach to investigate the research questions and objectives, with a focus on understanding how technostress, role overload, resilience, career future time perspective, and innovation climate influence teachers' innovative work behavior (IWB) in higher vocational colleges. Additionally, this study explores the mediating effects of emotional exhaustion and intrinsic motivation in these relationships.

3.2.1 Research Design

To address the study objectives and to empirically test the hypothesized model, this study adopted a positivist research philosophy, a quantitative research design was adopted. This method enables precise measurement of variables and rigorous statistical analysis, which ensures the results are reliable, replicable, and applicable to larger groups of population (Gawali, 2023). A cross-sectional design provides an efficient basis for initial model assessment in the focal population by evaluating whether the theorized pattern of associations is supported. By using this approach, this study aims to identify key factors influencing IWB among higher vocational college teachers and validate the relationships between these factors. Based on an extensive review of relevant literature, key variables influencing IWB—such as technostress, role overload, resilience, career future time perspective, innovation climate, emotional exhaustion, and intrinsic motivation—were identified. A a questionnaire was designed that incorporates multiple validated scales to ensure both reliability and validity. The scales were specifically adapted to the context of higher vocational education in China, maintaining alignment with the research objectives while ensuring cultural relevance. Structural equation modeling (SEM) was selected as the primary analytical technique because it is well suited to testing complex models involving multiple latent constructs. This study aims to test the proposed hypotheses, contributing valuable theoretical and empirical insights to the field of educational management.

3.2.2 Major Data Collection Method

This study employed a questionnaire as the primary data collection method. The survey was designed using internationally recognized and validated scales, which were identified through an extensive review of the literature. These scales were adapted from well-established instruments in the fields of organizational behavior, educational psychology, and teacher innovation, and have been validated in educational contexts. This ensures their relevance and reliability in the current study.

Given the characteristics of the target population, the questionnaire was administered in Chinese. To ensure both linguistic and conceptual equivalence, a back-translation procedure was followed (Klotz et al., 2023). Initially, two bilingual English-language teachers translated the original English scales into Chinese. Subsequently, two native English-speaking university instructors performed the reverse translation.

Following multiple rounds of discussion among the translators, ambiguous items were revised for clarity.

A pilot test was conducted with a small sample of teachers to ensure the appropriateness of the questionnaire for large-scale data collection. Feedback from participants was gathered to make necessary modifications to ensure the questionnaire meet the requirements for large-scale surveying. After incorporating the revisions, the scales underwent preliminary reliability and validity testing, leading to modifications of certain items. This process resulted in a refined version of the questionnaire for the formal survey.

The questionnaire consisted of two main sections: the first section collected demographic information from the respondents, including gender, age, tenure, academic ranks, education level, and managerial position. The second section included items related to the key research variables, comprising eight scales and 57 items.

3.2.3 Measurement Scales

3.2.3.1 Technostress

Technostress, as defined by Tarafdar et al. (2007), refers to the adaptive challenges faced by individuals who are unable to effectively cope with or adapt to the use of information and communication technologies. This stress can lead to dissatisfaction, fatigue, anxiety, and overwork, subsequently negatively impacting individual productivity. The definition of technostress used in this study has been widely adopted in educational research contexts to examine the pressures teachers face when utilizing technology in their teaching practices (Boyer-Davis, 2022; Dong et al., 2024). In this study, technostress is operationally defined as the psychological burden and adaptation challenges that higher vocational college teachers experience when they are unable to effectively manage or adapt to technology use in their teaching.

This study employed a 5-item simplified version of the technostress scale applied by Sharma et al. (2024), which is an adaptation of the "Technostress Creators Scale" (Ragu-Nathan et al., 2008). This simplified technostress scale has been applied and validated in several prior studies, showing strong reliability and validity (Jena, 2015; Lee & Cheng, 2014; Huang et al., 2021; Sharma et al., 2024). The scale consisted of 5 items measured on a 7-point Likert scale, where 1 represents "strongly disagree" and 7 represents "strongly agree." In the present study, the scale exhibited satisfactory internal reliability,

with a Cronbach's alpha coefficient of 0.889. The specific measurement items are presented in Table 3.2.

Table 3.2 Technostress Measurement Items

Variable	Original Items	Revised items	Source
Technostress	TS1: I am forced by information technology (IT) to work much faster.	TS1: I am forced by new teaching technologies to work much faster.	Sharma et al. (2024)
	TS2: I feel my personal life is being invaded because of IT.	TS2: I feel that new teaching technologies are invading my personal life.	
Technostress	TS3: I do not know enough about IT to handle my job satisfactorily.	TS3: I do not know enough about the new technologies required in teaching to handle my work satisfactorily.	Sharma et al. (2024)
	TS4: I feel a constant threat to my job security because of new ITs.	TS4: I feel that the rapid updates in teaching technologies may threaten my job security.	
	TS5: There are always new developments in ITs we use in our organization.	TS5: There are always new developments in teaching technologies we use in our college.	

3.2.3.2 Role Overload Scale

This study adopted the definition of role overload proposed by Peterson et al. (1995), which posited that role overload occurs when an individual's time, capabilities, and other personal resources are insufficient to meet the expected work responsibilities. This definition has been widely cited and recognized, with high applicability in exploring role overload across different contexts (Liu et al., 2018; Chen & Du, 2021). In this study, the operational definition of role overload is the extent to which teachers in higher vocational colleges perceive that their available resources (e.g., time, energy, and abilities)

are insufficient to meet the work demands and role expectations imposed by their institution or position.

This study used the role overload scale developed by Peterson et al. (1995) to measure the role overload of higher vocational college teachers. This scale has been validated in the Chinese context and has shown good reliability and validity (Xie et al., 2024; Huang et al., 2021; Wang et al., 2024; Zhang & Xie, 2017; Liu et al., 2018). The scale consists of 5 items, and it uses a 5-point Likert scale for measurement, where 1 means "Strongly Disagree" and 5 means "Strongly Agree". In the present study, the scale achieved adequate internal consistency, with a Cronbach's alpha of 0.872. The specific measurement items are presented in Table 3.3.

Table 3.3 Role Overload Measurement Items

Variable	Original Items	Revised Items	Source
Role overload	RO1: There is a need to reduce some parts of my role.	RO1:There is a need to reduce some parts of my role.	Peterson et al. (1995) Xie et al. (2022)
	RO2: I feel overburdened in my role.	RO2: I feel overburdened in my role (e.g. teaching, administrative work).	
Role overload	RO3: I have been given too much responsibility.	RO3: I have been given too much responsibility in my work.	Peterson et al. (1995) Xie et al. (2022)
	RO4: My work load is too heavy.	RO4: My work load is too heavy.	
	RO5: The amount of work I have to do interferes with the quality I want to maintain.	RO5: The amount of work I have to do interferes with the quality I want to maintain.	

3.2.3.3 Resilience Scale

This study adopted the definition of resilience provided by Campbell-Sills and Stein (2007), which views resilience as an individual's adaptability and recovery when facing adversity. This definition serves as the basis for measuring resilience in this research. In this study, the operational definition of resilience refers to the adaptability and recovery of higher vocational college teachers when facing difficulties in their work.

The connor-davidson resilience scale (CD-RISC) developed by Connor and Davidson is a multidimensional tool for measuring resilience. Based on the original scale, Campbell-Sills and Stein (2007) created and validated a simplified version consisting of 10 items, called CD-RISC 10. Although the original CD-RISC failed to maintain a consistent factor structure in some studies, the CD-RISC 10 has consistently demonstrated a stable unidimensional factor structure in several studies, including those involving teachers (Richards et al., 2016; Nartova-Bochaver et al., 2021; Ye et al., 2021). This scale has been widely used in various studies and has shown good reliability and validity (Wu, 2020; Nartova-Bochaver, 2021; Xie, 2021; Flores-Builds et al., 2022). For instance, Flores-Builds et al. (2022) applied the CD-RISC 10 scale to assess the resilience in teachers of early education, primary and special education. Therefore, this study uses the CD-RISC 10 scale to measure the resilience of higher vocational college teachers in China. The scale consists of 10 items and uses a 5-point Likert scale, where 1 means "Strongly Disagree" and 5 means "Strongly Agree." The scale achieved satisfactory internal consistency in the current study with a Cronbach's alpha of 0.937. The specific measurement items are presented in Table 3.4.

Table 3.4 Resilience Measurement Items

Variable	Original Items	Revised Items	Source
Resilience	RE1: I am able to adpat to change.	RE1: I am able to adapt to change in my work.	Campbell-Sills & Stein (2007) Flores-Builds et al. (2022)
	RE2: I can deal with whatever comes.	RE2: I can deal with whatever challenges in my work.	

Table 3.4 (continued)

Variable	Original Items	Revised Items	Source
Resilience	RE3: I try to see the humorous side of problems.	RE3: I try to see the humorous side of problems at work to relieve stress.	Campbell-Sills & Stein (2007) Flores-Builes et al. (2022)
	RE4: Coping with stress can strengthen me.	RE4: Coping with stress at work can strengthen me.	
	RE5: I tend to bounce back after illness or hardship.	RE5: I tend to bounce back after difficulties or setbacks in my work.	
	RE6: I can achieve goals despite obstacles.	RE6: I can achieve goals despite obstacles.	
	RE7: I can stay focused under pressure.	RE7: I can stay focused under pressure.	
	RE8: I am not easily discouraged by failure.	RE8: I am not easily discouraged by failure.	
	RE9: I think of myself as a strong person.	RE9:I think of myself as a strong person.	
	RE10: I can handle unpleasant feelings.	RE10:I can handle unpleasant feelings that arise during my work.	

3.2.3.4 Career Future Time Perspective Scale

This study adopted the career future time perspective scale developed by Park et al. (2021), which conceptualizes CFTP as the degree to which an individual values their future career, expects opportunities for success, and believes that their current activities are closely connected to future careers. This scale is highly applicable in understanding how career-related future time perspectives influence work-related outcomes (Fasbender et al., 2019; Rudolph et al., 2018). In this study, CFTP is operationally defined as higher vocational college teachers' perceptions of future career opportunities, the importance they

attach to long-term career goals, and their awareness of the connection between current work behaviors and future career development.

To assess career future time perspective, this study used 9 items adapted from scale developed by Park et al. (2021). The scale utilizes a 7-point Likert scale for measurement, where 1 means "Strongly Disagree" and 7 means "Strongly Agree." The scale demonstrated good reliability in this study with a Cronbach's alpha of 0.932. The specific measurement items are presented in Table 3.5.

Table 3.5 Career Future Time Perspective Measurement Items

Variable	Original Items	Revised Items	Source
Career Future Time Perspective	CFTP1: I have many opportunities related to my career in the future.	CFTP1: I believe there are many career opportunities available to me in the future within the higher vocational education field.	Park et al. (2021).
	CFTP2: There is every possibility that my future career will be successful.	CFTP2: I am confident that my future career will be successful.	
	CFTP3:Opportunities in my future career seem infinite to me.	CFTP3:I perceive that opportunities in my future career seem infinite to me.	
	CFTP4: My future career is more important to me than my current career.	CFTP4:My future career is more important to me than my current career.	
	CFTP5: It is more important for me to prepare future career than to enjoy my present life.	CFTP5: It is more important for me to prepare future career than to enjoy my present life.	

Table 3.5 (continued)

Variable	Original Items	Revised Items	Source
	CFTP6: It is more important to determine future-oriented career goal than short-term goal for me.	CFTP6: It is more important to determine future-oriented career goal than short-term goal for me.	
	CFTP7: I think that people need to organize their own career in the future.	CFTP7: As a higher vocational college teacher, I believe it is essential to plan for my future career and continuously work towards it.	
	CFTP8: I prepare my career success in the future step by step.	CFTP8: I am actively preparing for my career success by gradually improving my teaching and academic skills.	
	CFTP9: I need to join developmental activities for my career in the future.	CFTP9:I believe that engaging in professional development activities and learning opportunities is crucial for my future career growth.	

3.2.3.5 Innovation Climate Scale

Innovation climate is operationally defined as the perceived degree to which higher vocational colleges encourage and actively establish an organizational environment that supports teachers' innovation (Ye et al., 2022). This includes the organizational practices, leadership support, availability of resources, and tolerance for failure that create a conducive environment for creativity and novel work practices. This study uses the Organizational Innovation Climate Scale developed by Oke et al. (2013), which focuses on key practices that organizations use to support innovation, such as providing resources for employees to generate innovative ideas and promoting the exchange and sharing of knowledge and creativity through open communication mechanisms. The scale has also

been verified in other studies to have good reliability and validity (Popa et al., 2017; Tian & Wang, 2023). The scale consists of 4 items and uses a 7-point Likert scale, where 1 means “Strongly Disagree” and 7 means “Strongly Agree”. Since the original scale uses terms like "company" and "employees," which are designed for a business context, the terminology was adjusted to "college" and "teachers" in this study to better suit the vocational college context. Additionally, the expressions were optimized based on the characteristics of teachers' work, without affecting the scale's reliability and validity. In the present study, the scale demonstrated good realiablity with a Cronbach’s alpha of 0.856. The specific measurement items are presented in Table 3.6.

Table 3.6 Innovation Climate Measurement Items

Variable	Original Items	Revised Items	Source
Innovation climate	IC1: Our company provides time and resources for employees to generate, share/exchange, and experiment with innovative ideas/solutions.	IC1: Our college provides teachers with time and resources to generate, share/exchange, and experiment with innovative ideas or solutions.	Oke (2013) Popa et al. (2017)
	IC2: Our employees are working in diversely skilled work groups where there is free and open communication among the group member.	IC2: Our teachers are working in diversity skilled work groups where there is free and open communication among the group members.	
	IC3: Our employees frequently encounter nonroutine and challenging work that stimulates creativity.	IC3: Our teachers frequently encounter non-routine and challenging tasks that stimulate creativity.	

Table 3.6 (continued)

Variable	Original Items	Revised Items	Source
	IC4: Our employees are recognized and rewarded for their creativity and innovative ideas.	IC4: Our teachers are recognized and rewarded for creativity and innovative ideas.	

3.2.3.6 Emotional Exhaustion Scale

This study adopted the definition of emotional exhaustion proposed by Maslach et al. (2001), which views emotional exhaustion as the first stage and the core of the burnout process. This definition has been widely adopted and is highly applicable in various research contexts (Richards et al., 2019; Washburn et al., 2021; García-Arroyo, 2019). In this study, the operational definition of emotional exhaustion is the state in which teachers feel their emotional resources are overused and are unable to continue meeting the demands of their work in the face of work-related stress. Emotional exhaustion is considered a single dimension in this study.

To assess teacher's emotional exhaustion, this study used the emotional exhaustion scale from the Maslach Burnout Inventory-Educators Survey (MBI-ES) proposed by Maslach et al. (1996). The MBI-ES have been widely used in many studies and has been verified to have good reliability and validity (Voss et al., 2017; Portilla et al., 2022; Jia et al., 2022). For instance, Jia et al. (2022) used this scale to measure Chinese teacher's emotional exhaustion, reporting good reliability. Emotional exhaustion is assessed through 9 items, using a 5-point Likert scale, where 1 means "Strongly Disagree" and 5 means "Strongly Agree." The scale has demonstrated good reliability in this study with a Cronbach's alpha of 0.908. The specific measurement items are presented in Table 3.7.

Table 3.7 Emotional Exhaustion Measurement Items

Variable	Original Items	Revised Items	Source
Emotional Exhaustion	EE1: I feel emotionally drained from my work.	EE1: I feel emotionally drained from my work in higher vocational college.	Maslach and Jackson (1981)
	EE2: I feel used up at the end of the workday.	EE2: I feel used up at the end of each workday.	Jia et al. (2022)
	EE3: I feel fatigued when I get up in the morning and have to face another day on the job.	EE3: I feel fatigued when I get up in the morning and have to face another day on my job .	
	EE4: Working with people all day is really a strain for me.	EE4: Working with students or colleagues all day is really a strain for me.	
	EE5: I feel burned out from my work.	EE5: I feel burned out from my work.	
	EE6:I feel frustrated by my job.	EE6: I feel frustrated by my job.	
	EE7:I feel I'm working too hard on my job.	EE7:I feel I'm working too hard on my job.	
	EE8:Working with people directly puts too much stress on me.	EE8:Working with students or colleagues directly puts too much stress on me.	
	EE9:I feel like I'm at the end of my rope.	EE9:I feel like I'm at the end of my rope.	

3.2.3.7 Intrinsic Motivation Scale

This study adopted the definition of intrinsic motivation proposed by Amabile (1988), which emphasizes that intrinsic motivation refers to the tendency to engage in specific activities due to personal interest, satisfaction, or positive challenge, rather than external rewards. This definition has been widely cited and applied in various

research contexts (Xu et al., 2022; Fischer et al., 2019; Robin et al., 2023). When an individual is intrinsically motivated, their actions are driven by enjoyment or challenge, rather than external pressure or rewards. In this study, the operational definition of intrinsic motivation is the tendency of teachers to engage in specific activities due to personal interest, satisfaction, or positive challenge. Intrinsic motivation is treated as a single-dimension variable in this study.

To assess intrinsic motivation, this study uses the scale developed by Tierney et al. (1999). This scale has been widely used in previous research to measure intrinsic motivation and has shown good reliability and validity (Feng et al., 2018; Siyal et al., 2021; Chen et al., 2024; Wang et al., 2024). The scale consists of 5 items, using a 5-point Likert scale, where 1 indicates "Strongly Disagree" and 5 indicates "Strongly Agree." In this study, some modifications made to the original scale. Certain words in the original scale (e.g., "products") were more suited to business contexts, and did not align with the actual work content of vocational teachers. Therefore, the relevant terminology was adjusted to better reflect the actual work context of vocational education, such as replacing "products" with "teaching methods," ensuring the scale is more appropriate for the research context of vocational teachers. The scale demonstrated good internal consistency in the present study with a Cronbach's alpha of 0.882. The specific measurement items are presented in Table 3.8.

Table 3.8 Intrinsic Motivation Measurement Items

Variable	Original Items	Revised Items	Source
Intrinsic Motivation	IM1: I enjoy finding solutions to complex problems.	IM1: I enjoy finding solutions to complex problems.	Tierney et al. (1999). Wang et al. (2024).
	IM2: I enjoy coming up with new ideas for products.	IM2: I enjoy comping up with new ideas for curriculum design or teaching activities.	
	IM3: I enjoy engaging in analytical thinking.	IM3: I enjoy engaging in analytical thinking.	

Table 3.8 (continued)

Variable	Original Items	Revised Items	Source
	IM4: I enjoy creating new procedures for work tasks.	IM4: I enjoy creating new procedures for work tasks.	
	IM5: I enjoy improving existing processes or products.	IM5: I enjoy improving existing processes or teaching methods.	

3.2.3.8 Innovative Work Behavior (IWB) Scale

Innovative work behavior (IWB) refers to "the generation and implementation of new ideas within the work role, team, or organization to benefit role performance, the team, or the organization" (De Jong & Den Hartog, 2010; Janssen, 2000). This definition has been widely cited in various studies (Chen et al., 2016; Som & Suradi, 2019; Tan et al., 2021). In this study, innovative work behavior (IWB) is operationally defined as the extent to which teachers intentionally generate, promote, and implement novel ideas, teaching methods, or work practices in their teaching-related activities, with the aim of improving instructional effectiveness, work processes, and educational outcomes. Most studies have measured IWB as a single construct, consisting of both idea generation and idea implementation (De Jong & Den Hartog, 2010; Volery & Tarabashkina, 2021; Afsar & Umrani, 2020). Innovative work behavior in this study is treated as a single dimension, which has been confirmed to be applicable and effective in educational contexts (Afsar & Umrani, 2020; Messmann et al., 2022).

This study assessed innovative work behavior (IWB) with a 10-item scale used by Afsar (2021). This scale has one dimension and offers a comprehensive view of innovative work behavior. Previous studies on IWB among teachers in higher education have widely applied 10-item scale and confirmed good reliability and validity (Messmann et al., 2022; Gelaidan et al., 2024; Vermeulen et al., 2022). The scale use a 7-point Likert scale for measurement, where 1 represents "Strongly Disagree" and 7 represents "Strongly Agree." The reliability of the scale was satisfactory, with a Cronbach’s alpha coefficient of 0.926. The specific measurement items are presented in Table 3.9.

Table 3.9 Innovative Work Behavior Measurement Items

Variable	Original Items	Revised Items	Source
Innovative Work Behavior	IWB1:I pay attention to issues that are not part of my daily work.	IWB1: I pay attention to issues that are not part of my daily work.	Afsar et al. (2021).
	IWB2: I wonder how things can be improved.	IWB2: I wonder how things can be improved.	
	IWB3: I search out new working methods, techniques or instruments.	IWB3: I search out new teaching methods, techniques or instruments.	
	IWB4: I generated original solutions for problems.	IWB4: I generate original solutions for teaching problems.	
	IWB5: I find new approaches to execute tasks.	IWB5: I find new approaches to execute teaching tasks.	
	IWB6: I make organizational members enthusiastic for innovative ideas.	IWB6: I make my colleagues enthusiastic for innovative ideas.	
Innovative Work Behavior	IWB7: I attempt to convince people to support an innovative idea.	IWB7: I attempt to convince people to support an innovative idea.	Afsar et al. (2021)
	IWB8: I systematically introduce innovative ideas into work practices.	IWB8: I systematically introduce innovative ideas into teaching practices.	
	IWB9: I contribute to the implementation of new ideas.	IWB9: I contribute to the implementation of new ideas.	
	IWB10: I put effort in the development of new things.	IWB10: I put effort in the development of new things.	

Based on the above scales, this study developed a preliminary survey questionnaire, which was carefully designed in accordance with the requirements of the Rattanakosin International College of Creative Entrepreneurship in Thailand. Before the large-scale implementation, a pilot study was conducted to ensure the reliability and validity of the questionnaire. Moreover, previous research indicated that some background variables, such as gender, age, tenure, academic ranks, educational level and managerial position, are also important factors influencing teachers' IWB (Li et al., 2021). Therefore, this study will include gender, age, tenure, academic ranks, educational level and managerial position as background variables for this study.

3.2.4 Reliability and Validity Issues of the Scales

Reliability and validity assessments are essential to evaluate the quality of the measurement scales used in the questionnaire. Reliability reflects the consistency of a measurement instrument under similar conditions. In this study, internal consistency reliability was assessed using Cronbach's α, which evaluates the degree of inter-item consistency within each construct (Taber, 2018). As a general guideline, Cronbach's α values above 0.80 indicate good reliability, values between 0.70 and 0.80 are considered acceptable, and values below 0.60 may suggest that scale items require revision (Ahmad et al., 2024).

Construct validity was examined through factor-analytic procedures. During the pilot stage, Exploratory Factor Analysis (EFA) was conducted to explore the underlying factor structure and identify potentially problematic items (e.g., low loadings or cross-loadings). Prior to factor analysis, sampling adequacy was evaluated using the Kaiser-Meyer-Olkin (KMO) measure and Bartlett's test of sphericity (Shrestha, 2021). A KMO value greater than 0.70 indicates acceptable sampling adequacy, and a significant Bartlett's test suggests that the correlation matrix is suitable for factor analysis (Hair et al., 2019). In the main study, confirmatory factor analysis (CFA) was then performed to formally test whether the hypothesized measurement model fits the data, thereby providing evidence for the construct validity of the scales.

3.2.5 Pilot Study

A pilot study was conducted to assess the feasibility of the survey procedure and to obtain preliminary evidence regarding the measurement quality of the questionnaire, including item performance, internal consistency, and initial support for the dimensional

structure of the constructs. The use of a pilot test helps ensure that the instrument functions as intended and that the data collected in the main study are suitable for subsequent statistical analyses. The pilot study included 50 respondents, which falls within the commonly cited 30-50 range for pilot testing in initial scale development and supports preliminary item screening and internal consistency assessment (Johanson & Brooks, 2010; Hertzog, 2008).

To eliminate invalid questionnaires, the following control measures were implemented: First, to prevent the same respondent from submitting the questionnaire multiple times, the system was set to restrict submissions from the same IP address to once. Second, a minimum response time threshold was established (3 minutes); responses below this threshold were considered inattentive and excluded. Third, if a respondent selected the same Likert option across many consecutive items, it was flagged as invalid according to thresholds suggested by Costa and McCrae (2018) and revised by Huang et al. (2016). Finally, logically inconsistent answers in demographic questions also led to disqualification.

Pilot analyses were conducted in SPSS 26.0. In the pilot stage, item-level diagnostics were first examined to determine whether any item should be removed before the main study. Specifically, corrected item-total correlation (CITC), Cronbach's alpha if item deleted, factor loading, and communality were reviewed for each measurement item. The results of the pilot diagnostics indicated that all items met the predefined retention criteria. Specifically, all corrected item-total correlations (CITC) exceeded 0.30, which is commonly regarded as the minimum acceptable level for item-scale consistency (DeVellis, 2017). In addition, the "Cronbach's alpha if item deleted" results showed that removing any individual item would not meaningfully improve the reliability of its corresponding construct, suggesting that no item substantially weakened internal consistency (Taber, 2018). Furthermore, all factor loadings were above 0.50, indicating practically meaningful item-factor relationships, and all communalities were satisfactory, suggesting that each item shared an acceptable proportion of variance with the retained factor structure (Samuels, 2017). Therefore, no item was removed at the pilot stage.

After confirming item adequacy, internal consistency was assessed using Cronbach's alpha. Cronbach's alpha is the most commonly used reliability coefficient, and it helps to demonstrate that the scales and tests designed or adapted for the study are

appropriate (Taber, 2018). If the Cronbach's α value exceeds 0.7, it indicates that the internal consistency of the questionnaire items is acceptable. The pilot results indicated satisfactory internal consistency across constructs, with Cronbach's α values ranging from 0.849 to 0.942 as shown in Table 3.10, suggesting good internal consistency.

Table 3.10 Reliability Analysis of each Variable in the Pilot Test

Variables	Number of items	Cronbach's alpha
Technostress	5	0.886
Role overload	5	0.900
Resilience	10	0.942
Career future time perspective	9	0.926
Innovation climate	4	0.849
Emotional exhaustion	9	0.929
Intrinsic motivation	5	0.873
Innovative work behavior	10	0.930

An exploratory factor analysis (EFA) was conducted as a preliminary diagnostic assessment. EFA was performed within each construct to screen items and assess preliminary dimensionality. Following conventional guidelines, KMO values of 0.60 or above indicate acceptable adequacy (with values above 0.80 considered good), and a significant Bartlett's test ($p < .05$) supports the suitability of the correlation matrix for factor analysis (Kaiser, 1974; Field, 2018). As shown in Table 3.11, KMO value exceeded 0.80 and Bartlett's tests were significant ($p < .001$), indicating that the data were suitable for factor analysis.

As shown in Table 3.12, the analysis yielded eight factors with eigenvalues greater than 1, which together explained 64.85% of the cumulative variance after varimax rotation. This proportion exceeds the recommended minimum of 50% in social science research (Hair et al., 2010), demonstrating that the retained factors captured a substantial amount of common variance and achieved satisfactory data reduction.

Further analysis of the rotated component matrix (see Table 3.13) revealed that all items loaded strongly on their respective factors, with all factor loadings exceeding 0.50, which is considered a strong loading for factor analysis (Hair et al., 2010). These strong

loadings indicated that each item is strongly representative of its hypothesized construct, supporting the construct validity of the reworded items. Moreover, the items exhibited minimal cross-loadings, suggesting that the factors were distinct and well-differentiated. The eight extracted factors corresponded closely to the hypothesized constructs. Therefore, the EFA results indicated that the measurement items exhibited a clear and interpretable multidimensional structure. The items showed meaningful loading patterns on their respective dimensions, providing preliminary evidence regarding the internal structure of the instrument.

Table 3.11 KMO and Bartlett's Test of Sphericity

Kaiser-Meyer-Olkin Measure of Sampling Adequacy		0.970
Bartlett's test of sphericity	Approx. Chi-Square	21250.198
	df	1596
	Sig	0.000

* Note(s): From author's own work

Table 3.12 Total Variance Explained by Extracted Components

Component	Eigenvalue	% of Variance	Cumulative %
1	6.842	12.004%	12.004%
2	6.371	11.177%	23.181%
3	5.664	9.937%	33.118%
4	5.387	9.451%	42.570%
5	3.477	6.101%	48.670%
6	3.455	6.061%	54.731%
7	2.928	5.137%	59.867%
8	2.842	4.986%	64.854%

* Note(s): Components were extracted using principal component analysis. From author's own work.

Table 3.13 Summary of Rotated Component Matrix

Factor	Construct	Number of Items	Loading Range
F1	Technostress	5	.719 - .754
F2	Role Overload	5	.709 - .743
F3	Resilience	10	.706 - .789
F4	Career Future Time Perspective	9	.691 - .779
F5	Innovation Climate	4	.711 - .758
F6	Emotional Exhaustion	9	.593 - .742
F7	Intrinsic Motivation	5	.602 - .698
F8	Innovative Work Behavior	10	.584 - .672

* Note(s): Extraction method: Principal component analysis. Rotation method: Varimax with Kaiser normalization. From author's own work.

3.3 Data Collection Administration

3.3.1 Target Population

The target population of this study consists of teachers employed in higher vocational colleges in Heilongjiang Province, China. For the purposes of this study, teachers are defined as full-time faculty members with teaching responsibilities. Therefore, individuals whose positions are purely administrative and do not involve teaching duties are outside the scope of the target population. Part-time or adjunct teachers are also excluded because they face different workload structures and have limited access to institutional innovation resources. This requirement ensured that all participants had a similar level of workplace demands and responsibilities.

In higher vocational colleges, teachers often carry multiple roles beyond classroom teaching, such as student management (e.g., class advisor duties), coaching skills competitions, coordinating school–enterprise cooperation, completing administrative reporting, and meeting research or teaching-reform requirements. Also, higher vocational teachers increasingly rely on technologies such as digital campus systems, online teaching and course platforms, artificial intelligence teaching tools, augmented reality or virtual reality technology, and WeChat or DingTalk for daily teaching and administrative work. This provides an appropriate context for examining technology-related and role demands, motivational and strain mechanisms, and innovative work behavior.

The selection of vocational college teachers in Heilongjiang as the target population is based on several reasons. First, as a resource-based economic province, Heilongjiang is at a critical stage of economic transformation and industrial upgrading, with an urgent demand for innovation in vocational education and the cultivation of technical talent. On the other hand, Heilongjiang has recently introduced a series of policies aimed at promoting teaching innovation among vocational college teachers, providing a solid foundation for this study. According to the 2023 annual report of the Heilongjiang Provincial Department of Education, industry-education integration has been continuously advanced, with a focus on emerging sectors such as intelligent manufacturing and green agriculture. This policy-driven collaboration helps create an applied innovation environment in which teachers are encouraged to incorporate up-to-date industry technologies and outcomes into curriculum and instruction (Xinhua News, 2024). The implementation of the "Heilongjiang Provincial Vocational College Teachers' Quality Improvement Plan (2021-2025)" aims to enhance vocational teachers' curriculum development and teaching innovation abilities (Heilongjiang Daily, 2023). Furthermore, Heilongjiang has carried out special actions for the transformation of scientific and technological achievements, with 4,697 technology achievements converted in 2023, providing incentives for teachers' innovation (Xinhua News, 2024). Moreover, higher vocational teachers in Heilongjiang exhibits considerable diversity in terms of professional titles, age, and academic backgrounds, which allows for a comprehensive representation of the characteristics of higher vocational teachers.

Higher vocational colleges in Heilongjiang are mainly distributed across 12 cities, including Harbin, Qiqihar, Mudanjiang, Daqing and others (Figure 3.1). These colleges cover multiple academic disciplines, reflecting the diversity and breadth of higher vocational education. As of 2025, the province is home to 38 higher vocational colleges, with a total of more than 10,000 full-time faculty members (Heilongjiang Provincial Department of Education, 2025).



Figure 3.1 Demographic distribution of higher vocational colleges in Heilongjiang Province, China

However, a comprehensive, individual-level sampling frame of all teachers currently engaged in frontline teaching across the province was not publicly accessible, which made probability sampling infeasible in this study. In the absence of a complete and verifiable population list, probability-based techniques may not be practically implementable or methodologically defensible (Etikan et al., 2016).

Consequently, a non-probability sampling strategy was adopted to recruit participants who met the inclusion criteria and were directly relevant to the research objectives. Non-probability sampling is widely used in organizational research when access constraints limit the feasibility of random selection, particularly studies targeting specific professional groups (Creswell & Creswell, 2018).

3.3.2 Sampling Method

This study employs a multi-stage sampling approach, combining purposive sampling, quota sampling, and convenience sampling to ensure sample representativeness while enhancing the operational feasibility and efficiency of data collection. The choice of

each sampling method is driven by its relevance to the research objectives and the practical constraints of the study.

First, purposive sampling was employed to select six representative higher vocational colleges from the higher vocational colleges in Heilongjiang Province. Purposive sampling is a non-random sampling technique used to select ‘those respondents who are most likely to provide appropriate and useful information (Campbell et al., 2020). The rationale for employing this method lies in the need to capture institutional variation that reflects the complexity and heterogeneity of higher vocational education in the province, particularly in relation to educational innovation.

Specifically, the selected institutions were chosen based on the following criteria. First, institutions were chosen from major cities across the province, including Harbin, Mudanjiang, Jiamusi, and Daqing, to ensure regional representativeness and to account for potential contextual variation. Second, evidence of engagement in teaching innovation was a prerequisite for selection. These selected six colleges demonstrated active practices in teaching innovation, curriculum reform, industry-education collaboration, faculty development programs, and applied pedagogical models such as the “factory-in-campus” approach. Fourth, institutional performance levels were considered through reference to national rankings and star ratings (China University Rankings, 2024). The selected colleges range from top-performing institutions (e.g., a national backbone vocational college with a four-star rating) to mid- and lower-ranked colleges with only two-star ratings. This range ensures a balanced representation of institutional contexts, allowing for comparative analysis of innovation practices across different levels of innovation resources.

Table 3.14 The Selected Six Higher Vocational Colleges in Heilongjiang Province

No.	College Name	Location	National Rank	Star Rating	Reason for Selection
1	Heilongjiang Vocational College	Harbin	44	4★	As a national backbone vocational college, encourage teacher innovation practices through strong industry collaboration and outcome-oriented education.
2	Heilongjiang Agricultural Economics Vocational College	Mudan jiang	69	3★	Leading in fields such as intelligent manufacturing and digital commerce, this college promotes curriculum innovation and teacher development programs.
3	Heilongjiang Agricultural Engineering Vocational College	Harbin	77	3★	Focused on agricultural economics, this college fosters teaching innovation through close collaboration with the local agricultural industry.
4	Daqing Vocational College	Daqing	134	2★	Specializing in petrochemical disciplines, this college promotes teacher innovation through industry-education integration, especially in technological innovation.
5	Jiamusi Vocational College	Jiamusi	161	2★	Utilizing the "factory-in-campus" model, this college offers teachers a practical platform to innovate.

Table 3.14 (continued)

No.	College Name	Location	National Rank	Star Rating	Reason for Selection
6	Heilongjiang Ecological Engineering Vocational College	Harbin	179	2★	Specializing in ecological engineering and sustainable development, this college fosters green innovation, providing teachers with opportunities to innovate in teaching in sustainability fields.

Source: China University Rankings (2024, May 24)

Subsequently, this study employs quota sampling as the primary method to determine the sampling proportion of each higher vocational college. Quota sampling is particularly effective due to its flexibility and specificity, especially in scenarios where resources are limited and obtaining comprehensive information about the population is challenging (Iliyasu & Etikan, 2021). Based on the number of teachers in each college, the sample size is allocated proportionally to reflect the college distribution of the population. This proportional allocation helps ensure that the sample mirrors the underlying distribution of teachers across colleges, thereby improving the representativeness of the dataset and reducing the risk that any single institution is over or under represented in subsequent analyses.

Finally, convenience sampling was applied during the on-site data collection phase to select participants based on their availability and willingness to participate (Creswell, 2014). Although convenience sampling has limitations in terms of randomization, it is commonly adopted in field-based organizational research for its practical advantages in increasing response rates and facilitating access (Etikan et al., 2016). Convenience sampling is particularly suitable in scenarios where researchers have limited time and resources to conduct randomized sampling or access the entire population (Golzar et al., 2022). In the context of this study, convenience sampling was used within the boundaries set by prior purposive and quota-based selection, ensuring that the resulting sample remained relevant and sufficiently diverse.

To ensure the sample effectively reflects the study's focus on exploring the factors influencing innovative work behavior (IWB), participants were selected based on the following criteria. Firstly, only full-time teachers with the selected higher vocational colleges were included. Part-time teachers, adjunct teachers, visiting teachers, or retired teachers were excluded. Excluding non-full-time teachers avoids biases caused by differences in role responsibilities, workload, job stability and resource access. Secondly, participants need to undertake core teaching tasks during the study period, including course design, classroom teaching, practical training guidance, curriculum reform, or teaching research. Teachers who are solely engaged in administrative work (e.g., full-time staff in academic affairs offices without teaching duties) were excluded. This aligns with the study's focus on IWB in the teaching context. Thirdly, the teachers have ever applied new technology in their teaching, such as virtual reality, augmented reality, artificial intelligence, big data, multimedia teaching tools, interactive teaching platforms or others, as these technologies are integral to modern teaching innovations. These criteria above enhance the validity and generalization of the findings, ensuring the data accurately reflects the factors influencing innovative work behavior among higher vocational college teachers. Taken together, the integration of purposive, quota, and convenience sampling techniques provides both methodological rigor and pragmatic flexibility, yielding a data set well-suited to investigating the antecedents and dynamics of teachers' innovative work behavior in the higher vocational education context.

3.3.3 Sample Size

To ensure robust model estimation and adequate statistical power, sample size determination in this study was guided by the complexity of the proposed structural equation model, including the number of latent constructs, observed indicators, and structural paths. The model comprises eight latent variables measured by 57 observed indicators and specifies 20 structural path coefficients, representing a moderately complex SEM. Prior methodological research has proposed several empirical guidelines for determining minimum sample size in SEM. Bentler and Chou (1987) and Bollen (1989) suggested that the sample size should be 5 to 10 times the number of path coefficients or 10 times the number of observed indicators. Hair et al. (2017) further pointed out that using 10 times the number of observed indicators as the sample size estimation criterion is reasonable. Based on this criterion, the minimum recommended sample size for the present

study would be approximately 570 respondents. However, due to the fact that survey studies typically involve nonresponse and incomplete, inconsistent, or ineligible responses, 650 questionnaires were distributed to ensure that the final valid sample would still meet or exceed the minimum requirement. The specific distribution details are shown in Table 3.15.

Table 3.15 Questionnaire Distribution Table

Name of College	Number of teachers	Sampling Proportion	Number of Sample
Heilongjiang Vocational College	677	24%	158
Heilongjiang Agricultural Economics Vocational College	399	14%	94
Heilongjiang Agricultural Engineering Vocational College	1000	36%	235
Daqing Vocational College	245	9%	58
Jiamusi Vocational College	195	7%	46
Heilongjiang Ecological Engineering Vocational College	253	10%	59
In total	2769	100%	650

A total of 650 questionnaires were distributed, and 607 were returned. After data cleaning, 26 invalid responses were excluded, leaving 581 valid responses for subsequent analysis. The final valid response rate was 89.4%. This data cleaning process ensures the quality of the data used for analysis and provides a solid foundation for the conclusions drawn in this study.

3.3.4 Data Collection Method

This study adopted a quantitative research design utilizing a two-part structured questionnaire. The first part collected basic demographic information, while the second part examined teachers' perceptions of technostress, role overload, resilience, career future time perspective, innovation climate, emotional exhaustion, intrinsic motivation and innovative work behavior in higher vocational colleges in Heilongjiang Province, China.

The data collection was taken place across six vocational colleges in Heilongjiang Province. The formal survey period was from July to October 2025. Given the growing interest in online data collection methods (Sheng et al., 2021), an online survey platform (https://www.wjx.cn) was used to create an online questionnaire. This platform provides a convenient, user-friendly interface that ensures accessibility for all respondents (Zhang et al., 2025). To facilitate the recruitment of participants, the researcher received help from department heads or academic coordinator of the six colleges in identifying teachers who met the inclusion criteria and were willing to take part in the study. Participants got access the survey by either clicking the survey link or scanning the provided QR code, ensuring a convenient and user-friendly way to participate in the study. Prior to participation, all respondents provided written informed consent, and participation was entirely voluntary. The study was conducted in accordance with the principles of the Declaration of Helsinki and received ethical approval from the Ethics Committee of Mahachulalongkornrajavidyalaya University (1 July 2025, R. 466/2025). The researchers ensured that participants' privacy and autonomy were respected, and informed them that they could withdraw from the study at any time without facing any consequences.

3.4 Data Analysis

This study employed the licensed version of SPSS 26.0 and AMOS 26.0 software as the data analysis tools. The data analysis process included sequential checks from data cleaning, descriptive statistics, correlation analysis, reliability and validity tests, common method bias test, confirmatory factor analysis, to structural equation modeling. Additionally, indirect effects were assessed using a bootstrapping approach with 5,000 resampling iterations.

3.4.1 Data Cleaning

To ensure data quality, the following cleaning steps was implemented. First, during the data collection phase, a forced response function was incorporated in the questionnaire design to reduce the impact of missing values, minimizing unanswered items. Second, to further guarantee the logical consistency and completeness of the data, the responses was screened for logical errors, excluding samples with illogical responses, abnormally short response times, or incomplete answers. Samples not meeting the research criteria was also excluded. Finally, to remove outliers, this study used the SPSS and systematically filtered

out extreme data that might interfere with the analysis. After these rigorous data cleaning steps, the final dataset was imported into the analysis software to ensure the accuracy and scientific rigor of subsequent analyses.

3.4.2 Statistical and Data Interpretation Method

3.4.2.1 Descriptive Statistics

Descriptive statistics was performed on the study variables to help both the researcher and the readers understand the data characteristics. Using the licensed version of SPSS 26.0, this study analyzed the mean, standard deviation, maximum, and minimum values of the study variables.

3.4.2.2 Reliability and Validity Testing

The reliability and validity of the questionnaire were systematically assessed to ensure the measurement tool's reliability and validity. First, the internal consistency reliability of the questionnaire was evaluated using Cronbach's α coefficient and composite reliability (CR). Cronbach's α reflects the consistency of measurement items under the same construct, while CR assesses the overall reliability of the construct. A Cronbach's α and CR value greater than 0.70 for all constructs indicates a high level of internal consistency, suggesting that the construct has good reliability (Hair et al., 2018). Second, the convergent validity of the constructs was assessed by calculating the average variance extracted (AVE). AVE measures the extent to which measurement items explain the variance in the construct; higher AVE values suggest that the measurement items adequately reflect the latent variable. If the AVE of all constructs is greater than 0.50, it indicates good convergent validity (Cheung et al., 2024). Furthermore, the study also focus on factor loadings, which reflect the correlation between each measurement item and its corresponding construct. Typically, factor loadings need to exceed 0.50 to demonstrate strong explanatory power (Finch, 2020). To evaluate discriminant validity between constructs, the fornell-larcker criterion was applied. Specifically, the square root of the AVE was compared with the inter-construct correlation coefficients. If the square root of the AVE is greater than the correlation coefficients between constructs, it suggests good discriminant validity.

3.4.2.3 Common Method Bias Test

The relationships among variables may be influenced by common method bias (CMB), particular because the measures were collected from the same respondents. To assess weather CMB is likely to be problematic, this study employed Harman's single-factor test as an initial diagnostic by conducting an exploratory factor analysis on all questionnaire items and examining the unrotated factor solution. If the variance explained by a single factor is below 50% (Podsakoff et al., 2003), this provides an indication that CMB is unlikely to be a major threat; nevertheless, the test is conservative and should be interpreted cautiously.

3.4.2.4 Correlation Analysis

Pearson correlation analysis was employed to calculate zero-order correlation coefficients to assess the linear relationships between the study variables. Pearson correlation is a widely used statistical method in social sciences to quantify the degree of association between variables (Obilor & Amadi, 2018). The correlation coefficient ranges from -1 to +1, with values close to -1 indicating a strong negative correlation, values close to +1 indicating a strong positive correlation, and values near 0 suggesting no significant linear relationship between the variables (Schober et al., 2018). The results of the correlation analysis not only reveal the direction and strength of relationships between variables but also provide important insights for exploring potential causal relationships (Tabachnick & Fidell, 2019).

3.4.2.5 Confirmatory Factor Analysis (CFA)

Prior to hypothesis testing, this study conducted multi-group Confirmatory Factor Analysis (CFA) using the licensed version of AMOS 26.0 to verify the goodness of fit for the eight-factor model, which includes technostress, role overload, resilience, career future time perspective, innovation climate, emotional exhaustion, intrinsic motivation, and innovative work behavior. CFA is an important analytical tool for validating the constructs and assessing the reliability of the measurement items, determining whether the relationships between latent variables and their indicators align with theoretical expectations (Tavakol & Wetzel, 2020). The study evaluated the measurement model using common fit indices, which were summarized in Table 3.16, detailing the types of fit indices, their acceptance criteria, and supporting literature:

Table 3.16 Fit Indices Categories and Acceptance Criteria

Categories	Indicators	Acceptance Criterion	Supporting Literature
Parsimonious Fit	χ^2/df	< 3.00	Marsh and Hocevar (1985)
Absolute Fit	RMSEA	< 0.08	Browne and Cudeck (1993)
	GFI	> 0.90	Joreskog and Sorbom (1984)
Incremental Fit	AGFI	> 0.90	Tanaka and Huba (1985)
	CFI	> 0.90	Bentler (1990)
	TLI	> 0.90	Bentler and Bonett (1980)

To assess the discriminant validity of the constructs, a series of alternative models were tested, with the baseline model being an eight-factor model in which each construct was treated as a distinct factor. To further evaluate whether these factors were sufficiently distinct from one another, the eight-factor model was compared with several alternative models, where conceptually related constructs were combined into fewer factors. These alternative models were selected based on theoretical reasoning, where constructs that were conceptually similar were grouped together to examine whether they would lead to a poorer fit when compared to the baseline model. The fit of each model was assessed using fit indices, including the χ^2/df, CFI , TLI, and RMSEA. To compare the fit of those models, chi-square difference tests ($\Delta\chi^2$) were conducted. A significant increase in the chi-square value from the baseline model to an alternative model indicated that combining the constructs results in a significantly worse fit, thus providing evidence against the discriminant validity of the constructs.

3.4.2.6 Structural Equation Modeling (SEM) Path Analysis

This study further employed Structural Equation Modeling (SEM) to examine path relationships and test the causal mechanisms of the hypothesized model. SEM allows for the simultaneous analysis of both direct and indirect effects between multiple latent variables, making it an effective tool for studying complex relationships between multiple constructs (Zhang, 2022). In this study, path diagrams were drawn using the licensed version of AMOS 26.0 software to visually represent the relationships between latent variables, providing a clear framework for subsequent model building and parameter estimation. Maximum likelihood estimation (ML) was used to calculate the

model parameters, including path coefficients, factor loadings, and error terms. Path coefficients indicate the magnitude and direction of the direct effects between latent variables. The standardized path coefficients typically range from -1 to +1, reflecting the positive or negative correlations between variables (Hair et al., 2019). Factor loadings are used to assess the contribution of observed variables to latent variables. Error terms evaluate the unexplained variance in the model, with lower error values indicating a stronger explanatory power of the model.

Additionally, this study tested the mediating effects. The mediating effect reveals the path through which the independent variable (X) influences the dependent variable (Y) via a mediator (M). This study followed a rigorous procedure to verify the existence of the mediating effect, including testing the significance of paths from X to M (path a) and from M to Y (path b), as well as calculating the direct effect from X to Y (path c) and the total effect (path c'=a×b). To more accurately assess the significance of the mediating effect, this study employed the Bootstrap method, which involves repeated sampling to calculate the standard error and confidence intervals for the mediating effect. Bias-corrected bootstrap analyses with 5,000 resamples were conducted to test the hypothesized mediating effect. An indirect effect was considered significant when the 95% confidence interval did not include zero.

Simultaneously, the overall goodness of fit of the model was evaluated. Several commonly use fit indices were employed, including the Chi-square to degrees of freedom ratio (χ^2/df), RMSEA, CFI, IFI, TLI, and SRMR. These indices provided comprehensive information regarding the model's validity.

3.5 Ethical Considerations

Ethical considerations play a crucial role in ensuring integrity, credibility, and responsible conduct of research. This study adhered to the ethical guidelines outlined by the American Psychological Association (APA, 2017), the Belmont Report (National Commission for the Protection of Human Subjects, 1979), and General Data Protection Regulation (GDPR) guidelines for research. The ethical considerations in this study address key principles such as informed consent, confidentiality, participant well-being, data integrity, and adherence to institutional review requirements.

3.5.1 Informed Consent

Informed consent is fundamental to ethical research, ensuring that participants voluntarily agree to take part in this study with full awareness of its purpose, procedures, potential risks, and benefits. Participants in this study were provided with a detailed informed consent form, which explicitly stated the research objectives, data collection procedures, estimated time commitment, and the voluntary nature of their participation. The form also included assurances that participants had the right to withdraw at any time without facing any penalties. Confidentiality measures and data security protocols were also outlined in the consent process. Prior to participation, each respondent provided electronic consent in accordance with the Institutional Review Board (IRB) guidelines (Kaewkungwal & Adams, 2019). This study ensured that participants had ample opportunity to ask questions before consenting, and their participation was only confirmed after explicit agreement was obtained.

3.5.2 Confidentiality and Data Protection

Ensuring confidentiality and data protection is vital to maintaining participant trust and ethical integrity. All data collected in this study remained confidential, and no personally identifiable information, such as names, addresses, or IP addresses, was recorded. In compliance with General Data Protection Regulation (GDPR) principles (European Parliament & Council, 2016), data were anonymized before analysis, stored securely in password-protected databases, and restricted to authorized members of the research team. Stringent data security measures were implemented, including encryption and secure access protocols, to prevent unauthorized access or misuse. Participants were explicitly informed of the steps taken to safeguard their data, and all collected responses were aggregated to ensure that individual participants could not be identified (Ross et al., 2018). Additionally, data retention policies were followed, ensuring that data were permanently deleted after a predetermined period to prevent any potential breaches of privacy.

3.5.3 Non-Maleficence and Psychological Well-Being

Given that this study explores workplace stressors, including technostress, emotional exhaustion, and role overload, ethical considerations were made to minimize potential psychological distress among participants. The survey questions were designed carefully to avoid causing undue stress or discomfort. Participants were informed in

advance about the nature of the study, particularly regarding any content that might evoke emotional responses. To further protect participant well-being, a debriefing statement was provided at the conclusion of the survey, including information on mental health resources and workplace support mechanisms. If at any point participants felt uncomfortable, they had the option to skip questions or withdraw from the study entirely, without any obligation to provide a reason. These measures ensured that participant well-being was prioritized throughout the research process.

3.5.4 Fair Representation and Avoidance of Bias

To uphold ethical research standards, particular attention was given to ensuring that the study sample represented a diverse population. Efforts were made to recruit participants from a broad demographic spectrum, including variations in gender, age, industry, and work experience. No participants were coerced or unfairly incentivized to take part, and no discriminatory exclusion criteria were applied, except those necessary for defining the study's research scope. The recruitment process followed ethical principles of fairness and inclusive, ensuring that the study's findings would be generalizable and applicable across different workforce settings. Bias was minimized by employing randomized sampling techniques where applicable, as well as ensuring that all survey questions were neutrally phrased and free from leading language (Zimba & Gasparyan, 2023).

3.5.5 Data Integrity and Avoiding Manipulation

Ensuring the integrity of research data is essential to maintaining credibility and avoiding unethical practices such as data manipulation, p-hacking, or selective reporting. In this study, all data were collected and analyzed following ethical statistical practices, ensuring transparency and reproducibility. The goodness-of-fit indices were rigorously assessed to confirm model validity and reliability. Predefined hypotheses were adhered to, reducing the risk of data-driven modifications that could compromise research validity. To further safeguard against bias, no fabrication, falsification, or selective reporting of data was permitted at any stage of the research process (Aguinis et al., 2018). Additionally, all methods and findings were documented clearly to allow for independent verification and replication.

3.5.6 Institutional Review Board (IRB) Approval

Prior to data collection, this study was submitted for ethical review and received Institutional Review Board (IRB) approval. This approval process ensured that the research adhered to established ethical guidelines, particularly regarding participant safety, voluntary participation, and data protection measures. The IRB assessed the study's methodology, potential risks to participants, data management strategies, and compliance with ethical research principles. Participants were informed that the study had received ethical clearance and were provided with IRB contact details should they have any concerns regarding the study's ethical conduct (National Commission for the Protection of Human Subjects, 1979).

3.5.7 Transparency and Open Science Practices

Following ethical guidelines for transparency and scientific integrity, this study adopted open science practices to enhance replicability and credibility. Efforts were made to ensure that the research process remains transparent, including pre-registering hypotheses and sharing anonymized datasets where appropriate (Carpenter & Law, 2021). By providing SEM analysis scripts and data processing steps, this study enables future researchers to validate and replicate the findings. Ethical considerations regarding data sharing were followed, ensuring that any publicly available datasets were sufficiently anonymized to prevent the identification of individual participants.

3.6 Conclusion

This chapter provided a comprehensive overview of the research methodology used in the study. It began by discussing the research paradigm and justified the adoption of a quantitative approach applying positivist paradigms. This chapter outlined the survey-based approach, including the measurement scales for key variables, pilot testing, data collection procedures, and statistical analysis methods such as structural equation modeling (SEM). Finally, ethical considerations were discussed to ensure the study adheres to ethical research principles. This methodological framework ensures a well-structured approach to investigating the factors influencing innovative work behavior among vocational college teachers.

CHAPTER 4
RESULTS

This study examined the impact of techonostress, role overload, resilience, career future time perspective and innovation climate on innovative work behavior of teachers in higher vocational colleges in Heilongjiang Province of China. It also investigated the mediating role of emotional exhaustion and intrinsic motivation. Guided by the methodology of the research, quantitative methods approach was employed, and valid data were obtained through questionnaire surveys. The following are the results of the data analysis and the verification process of the research hypotheses, based on the research questions and objectives.

4.1 Descriptive Statistics of Respondents

Table 4.1 shows the results of the demographic descriptive analysis. A total of 581 higher vocational teachers participated in this survey, covering multiple dimensions such as gender, age, tenure, academic ranks, educational level, management position, innovative practice, and the use of digital teaching tools.

First, in terms of gender distribution, the proportion of women is significantly higher than that of men, at 61.96% and 38.04% respectively, reflecting that female teachers dominate the teaching staff of higher vocational colleges. In terms of age structure, teachers aged 41-50 and 31-40 accounted for the highest proportion, at 35.97% and 32.01% respectively, totaling 67.98%, indicating that the higher vocational teacher group is mainly composed of middle-aged teachers. In terms of tenure, 48.88% of the respondents have more than 10 years of teaching experience, indicating that the sample as a whole has a relatively rich practical background, which helps to provide stable and reliable research data. In the distribution of academic ranks, lecturers and associate professors account for the majority, accounting for 39.93% and 38.04% respectively, showing a structural feature dominated by teachers with intermediate academic ranks. In terms of educational level, master's degree holders account for 70.05%, followed by

teachers with bachelor's degrees (21.51%), and the proportion of doctoral degrees is relatively low, only 6.88%.

In terms of management positions, 23.06% of teachers hold management positions, while 76.94% are non-management personnel, indicating that managers account for a small proportion of the teacher group. It is worth noting that 88.30% of teachers said that there are innovative practices in the teaching process, indicating that the majority of teachers are actively engaged in teaching innovation. In terms of technological application, the most widely adopted tools included intelligent teaching platforms (84.34%), artificial intelligence tools (78.49%), and online teaching platforms (69.36%). This suggests that educators are actively integrating digital tools into their teaching.

Table 4.1 Descriptive Analysis of Demographics (N=581)

Name	Options	Frequency	Percentage (%)
Gender	Male	221	38.04
	Female	360	61.96
Age	21-30	93	16.01
	31-40	186	32.01
	41-50	209	35.97
	51 above	93	16.01
Tenure	＜1	6	1.03
	1-5	128	22.03
	6-10	163	28.06
	>10	284	48.88
Academic Rank	Assistant Lecturer	58	9.98
	Lecturer	232	39.93
	Associate Professor	221	38.04
	Professor	70	12.05
Education Level	Associate Degree	6	1.03
	Bachelor’s degree	128	21.51
	Master's degree	407	70.05
	Doctoral degree	40	6.88

Table 4.1 (continued)

Name	Options	Frequency	Percentage (%)
Management Position	Yes	134	23.06
	No	447	76.94
Innovative practices in teaching	Yes	513	88.30
	No	68	11.70
Technology Application	Virtual Reality (VR)	89	15.32
	Augmented Reality (AR)	54	9.29
	Artificial Intelligence (AI) Tools	456	78.49
	Big Data Analysis Tools	238	40.96
	Intelligent teaching platform	490	84.34
	Online teaching tools	403	69.36
	Others	26	4.47
	Never	0	0.00
Total		581	100

4.2 Descriptive Statistics of Observed Variables

Table 4.2 presents the means, standard deviations, and normality statistics for the main study variables and their respective measurement items. The average scores indicate that participants reported relatively high levels of career future time perspective, intrinsic motivation, and innovative work behavior, suggesting that employees generally view their future careers optimistically, remain intrinsically engaged in their tasks, and exhibit proactive innovative behaviors at work. Innovation climate was also rated relatively high, reflecting a shared perception of organizational support for creativity and change. In contrast, resilience was reported at a moderate level, while role overload and technostress revealed slightly above-average scores, indicating that employees experience some degree of work-related strain and technology-induced stress. Emotional exhaustion was reported at a moderate level as well, pointing to the presence of psychological fatigue in daily work.

Normality was assessed using skewness and kurtosis statistics at both the item and construct levels. As shown in Table 4.2, skewness values range from −1.312 to 0.481,

while kurtosis values range from −1.399 to 1.624. Following common SEM practice, all values fall within the commonly accepted thresholds of skewness less than 2 and kurtosis less than 7, indicating no serious violations of univariate normality (Kline, 2015). Although some variables displayed slightly negative skewness, the overall distribution of scores did not raise concerns regarding substantial deviation from normality. Therefore, the observed values indicated that the normality assumption is sufficiently satisfied for the subsequent CFA and SEM procedures.

Table 4.2 Means and Normality Tests of Different Items and Dimensions

Items	M	SD	Minimum	Maximum	Skewness	Kurtosis
TS1	4.816	1.677	1.00	7.00	-0.680	-0.484
TS2	5.134	1.631	2.00	7.00	-0.595	-0.736
TS3	4.246	1.930	1.00	7.00	-0.125	-1.398
TS4	3.680	1.789	1.00	7.00	0.350	-1.167
TS5	4.828	1.615	1.00	7.00	-0.717	-0.201
Technostress	4.541	1.442	1.40	7.00	-0.153	-1.238
RO1	3.592	1.423	1.00	7.00	0.481	-0.115
RO2	3.527	0.864	2.00	5.00	-0.018	-0.653
RO3	3.423	0.915	2.00	5.00	0.106	-0.797
RO4	3.497	0.933	2.00	5.00	0.071	-0.865
RO5	3.580	1.029	1.00	5.00	-0.398	-0.548
Role overload	3.524	0.856	1.80	5.40	0.052	-1.051
RE1	3.613	0.934	1.00	5.00	-0.509	-0.007
RE2	3.571	0.934	1.00	5.00	-0.285	-0.525
RE3	3.401	1.044	1.00	5.00	-0.092	-1.033
RE4	3.251	1.141	1.00	5.00	-0.126	-0.833
RE5	3.473	1.101	1.00	5.00	-0.208	-1.199
RE6	3.114	1.094	1.00	5.00	0.447	-1.030
RE7	3.606	1.011	1.00	5.00	-0.396	-0.721
RE8	3.121	1.108	1.00	5.00	0.310	-0.890
RE9	3.260	1.109	1.00	5.00	0.241	-1.153
RE10	3.568	0.903	1.00	5.00	-1.312	1.624

Table 4.2 (continued)

Items	M	SD	Minimum	Maximum	Skewness	Kurtosis
Resilience	3.398	0.831	1.70	4.90	-0.104	-1.155
CFTP1	4.921	1.828	1.00	7.00	-0.839	-0.432
CFTP2	4.831	1.691	1.00	7.00	-0.899	-0.069
CFTP3	4.601	1.672	1.00	7.00	-0.639	-0.438
CFTP4	4.227	1.551	1.00	7.00	-0.238	-0.289
CFTP5	4.642	1.900	1.00	7.00	-0.443	-0.989
CFTP6	4.921	1.570	1.00	7.00	-0.820	0.063
CFTP7	5.222	1.575	1.00	7.00	-1.194	0.799
CFTP8	5.114	1.684	1.00	7.00	-0.997	0.082
CFTP9	5.212	1.543	1.00	7.00	-1.310	1.009
Career future time perspective	4.855	1.348	1.67	6.98	-0.464	-0.926
IC1	4.902	1.656	1.00	7.00	-0.834	-0.312
IC2	5.033	1.589	1.00	7.00	-0.985	0.153
IC3	5.103	1.610	1.00	7.00	-1.006	0.245
IC4	5.145	1.583	1.00	7.00	-1.092	0.470
Innovation climate	5.046	1.346	1.25	7.00	-0.690	-0.660
EE1	3.592	0.945	1.00	5.00	-1.145	1.244
EE2	3.539	0.906	1.00	5.00	-1.203	1.401
EE3	3.510	0.909	1.00	5.00	-1.099	1.214
EE4	3.386	1.063	1.00	5.00	-0.601	-0.485
EE5	3.540	0.942	1.00	5.00	-1.193	1.011
EE6	3.539	0.940	1.00	5.00	-1.200	1.022
EE7	3.501	1.071	1.00	5.00	-1.067	0.378
EE8	3.504	0.907	1.00	5.00	-1.098	1.210
EE9	3.503	0.941	1.00	5.00	-1.105	0.833
Emotional Exhaustion	3.513	0.729	1.56	4.78	-0.697	-0.591
IM1	5.227	1.735	1.00	7.00	-1.042	0.053

Table 4.2 (continued)

Items	M	SD	Minimum	Maximum	Skewness	Kurtosis
IM2	5.198	1.593	1.00	7.00	-1.115	0.575
IM3	5.336	1.611	1.00	7.00	-1.278	0.850
IM4	5.012	1.605	1.00	7.00	-0.792	0.037
IM5	5.195	1.610	1.00	7.00	-1.043	0.460
Intrinsic Motivation	5.194	1.346	1.40	7.00	-0.706	-0.481
IWB1	5.047	1.492	1.00	7.00	-1.210	0.889
IWB2	5.275	1.584	1.00	7.00	-1.265	0.878
IWB3	5.361	1.632	1.00	7.00	-1.249	0.769
IWB4	5.145	1.538	1.00	7.00	-1.183	0.862
IWB5	5.117	1.538	1.00	7.00	-1.173	0.742
IWB6	4.494	1.446	1.00	7.00	-0.468	-0.102
IWB7	4.690	1.531	1.00	7.00	-0.678	-0.313
IWB8	5.231	1.595	1.00	7.00	-1.172	0.651
IWB9	5.096	1.544	1.00	7.00	-1.090	0.666
IWB10	5.084	1.530	1.00	7.00	-1.126	0.732
Innovative Work Behavior	5.054	1.195	2.20	6.90	-0.543	-0.888

* Note(s): M = mean; SD = standard deviation.

4.3 Confirmatory Factor Analysis and Measurement Model Evaluation

Confirmatory Factor Analysis (CFA) is a statistical method used to verify how well a hypothesized factor structure matches the observed data. It assesses whether the theoretical model is consistent with the empirical evidence, thereby providing support for the model's validity (Kline, 2023). During model evaluation, the goodness of fit is examined using indicators such as CMIN/DF, RMSEA, GFI, AGFI, NFI, IFI, TLI, and CFI, by comparing their values to established reference ranges.

4.3.1 Confirmatory Factor Analysis Model of Technostress

Technostress has one dimension and five items. After confirmatory factor analysis, Figure 4.1, Table 4.3, and Table 4.4 were shown.

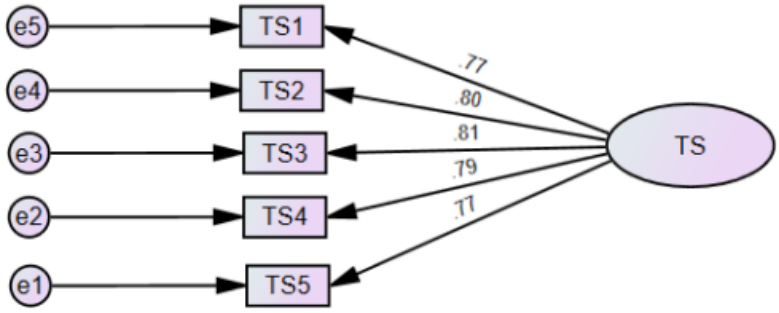

Figure 4.1 Confirmatory factor analysis model of technostress

* Note(s): TS: technostress.

Table 4.3 presents the model fit indices for the Technostress construct. The chi-square value of the model is 6.327 with 5 degrees of freedom, resulting in CMIN/DF of 1.265, which is well below the conventional threshold of 3, indicating a good model fit. The RMSEA value is 0.021, far below the recommended upper limit of 0.08, suggesting an excellent approximation of the model to the observed data. In addition, the GFI and AGFI values are both greater than 0.90, demonstrating a strong level of absolute fit. The incremental fit indices—NFI , IFI , TLI, and CFI—are all well above 0.90, indicating superior comparative fit. Overall, all fit indices meet or exceed the recommended standards, showing that the measurement model fits the empirical data very well. This result provides strong evidence for the structural validity of the Technostress construct within the overall measurement model.

Table 4.3 Model Fit Index of Technostress

Fit Indices	Acceptable Range	Result	Model Fit
CMIN		6.327	
DF		5	
CMIN/DF	<3	1.265	Good
RMSEA	<0.08	0.021	Good
GFI	>0.9	0.996	Good
AGFI	>0.9	0.987	Good
NFI	>0.9	0.996	Good
IFI	>0.9	0.999	Good
TLI	>0.9	0.998	Good
CFI	>0.9	0.999	Good

Table 4.4 presents the factor loadings, AVE and CR values for the Technostress construct. All standardized factor loadings ranged from 0.766 to 0.809, exceeding the recommended threshold of 0.6, indicating that each measurement item loads significantly on its corresponding latent construct.

Table 4.4 Factor Loadings, AVE, and CR for Technostress

Variables	Items	Factor loadings	AVE	CR
TS	TS1	0.773	0.619	0.890
	TS2	0.798		
	TS3	0.809		
	TS4	0.788		
	TS5	0.766		

* Note(s): CR = composite reliability; AVE = average variance extracted.

This suggests that all items contribute meaningfully to explaining the underlying Technostress factor. The AVE value for Technostress was 0.619, which is higher than the recommended minimum value of 0.50, demonstrating that the construct explains more than half of the variance in its observed indicators. This provides strong evidence of convergent validity for the Technostress construct. Additionally, the Composite Reliability (CR) was 0.890, surpassing the threshold value of 0.70, which indicates a high level of internal consistency and reliability among the measurement items. These results confirm that the Technostress construct exhibits satisfactory convergent validity and reliability, supporting its suitability for inclusion in the overall measurement model.

4.3.2 Confirmatory Factor Analysis Model of Role Overload

Role overload have 1 dimension and 5 measurement items. After confirmatory factor analysis, Figure 4.2, Table 4.5, and Table 4.6 were obtained.

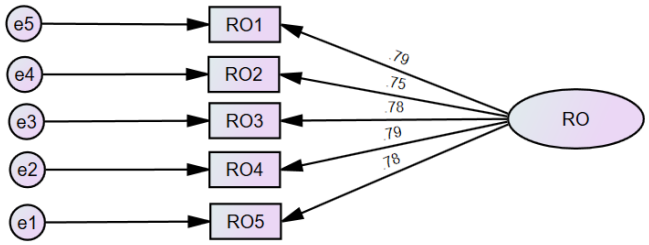

Figure 4.2 Confirmatory factor analysis model of role overload

* Note(s): RO: role overload.

Table 4.5 displays the model fit indices for the Role Overload construct. The chi-square value (CMIN = 2.910, df = 5) resulted in a CMIN/DF ratio of 0.582, which is well below the recommended threshold of 3, indicating an excellent fit between the model and the data. The RMSEA value suggesting an almost perfect approximation of the model to the observed data.In addition, the incremental and absolute fit indices all exceeded the recommended cut-off value of 0.90. Although the IFI and TLI values slightly exceeded 1, this is due to rounding errors in the computation and indicates an exceptionally good model fit rather than a problem with the model itself.These demonstrated that the measurement model for Role Overload exhibited an excellent level of fit and strongly supports the construct's validity.

Table 4.5 Model Fit Index of Role Overload

Fit Indices	Acceptable Range	Result	Model Fit
CMIN		2.910	
DF		5	
CMIN/DF	<3	0.582	Good
RMSEA	<0.08	0.000	Good
GFI	>0.9	0.998	Good
AGFI	>0.9	0.994	Good
NFI	>0.9	0.998	Good
IFI	>0.9	1.001	Good
TLI	>0.9	1.003	Good
CFI	>0.9	1.000	Good

Table 4.6 presents the factor loadings, Average Variance Extracted (AVE), and Composite Reliability (CR) values for the Role Overload construct. All standardized factor loadings range from 0.748 to 0.789, exceeding the recommended minimum of 0.6, indicating that each item loads significantly on its intended construct. The AVE value is 0.603, which is above the threshold of 0.50, demonstrating satisfactory convergent validity. Furthermore, the Composite Reliability (CR) is 0.883, surpassing the 0.70 criterion, indicating strong internal consistency among the measurement items. These

results confirm that the Role Overload construct has good reliability and convergent validity.

Table 4.6 Factor Loadings, AVE, and CR for Role Overload

Variables	Items	Factor loadings	AVE	CR
RO	RO1	0.789	0.603	0.883
	RO2	0.748		
	RO3	0.781		
	RO4	0.788		
	RO5	0.775		

* Note(s): CR = composite reliability; AVE = average variance extracted.

4.3.3 Confirmatory Factor Analysis Model of Resilience

Resilience have 1 dimension and 10 measurement items. After confirmatory factor analysis, Figure 4.3, Table 4.7, and Table 4.8 were obtained.

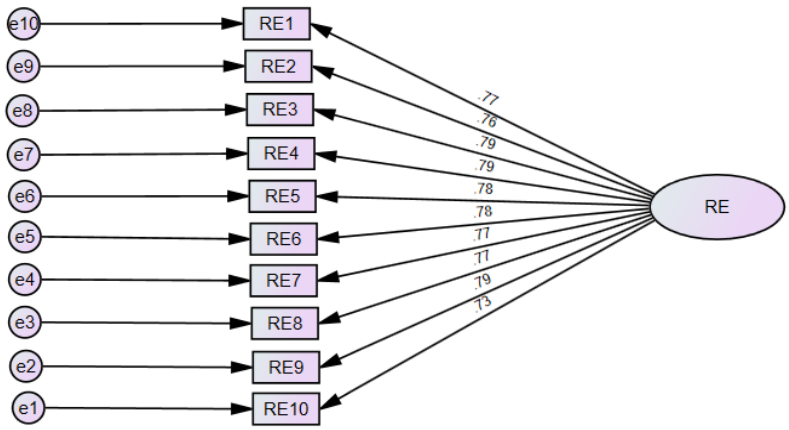

Figure 4.3 Confirmatory factor analysis model of resilience

*Note: RE: Resilience

The Resilience measurement model shows an excellent fit, as shown in Table 4.7. The chi-square to degrees-of-freedom ratio is 1.049, well below the <3 guideline. RMSEA=0.009 indicates negligible approximation error. Absolute fit indices are high, and incremental indices approach unity, with values at 1.000 attributable to rounding. These support the Resilience construct's strong model–data correspondence.

Table 4.7 Model Fit Index of Resilience

Fit Indices	Acceptable Range	Result	Model Fit
CMIN		36.716	
DF		35	
CMIN/DF	<3	1.049	Good
RMSEA	<0.08	0.009	Good
GFI	>0.9	0.988	Good
AGFI	>0.9	0.981	Good
NFI	>0.9	0.990	Good
IFI	>0.9	1.000	Good
TLI	>0.9	0.999	Good
CFI	>0.9	1.000	Good

Table 4.8 presents the factor loadings, Average Variance Extracted (AVE), and Composite Reliability (CR) values for the Resilience construct. All standardized loadings fall within 0.730–0.793, exceeding the 0.50 benchmark and indicating that each item contributes meaningfully to the latent construct. The AVE = 0.606 surpasses the 0.50 criterion, evidencing solid convergent validity. The CR = 0.939 reflects excellent internal consistency. These confirm that the Resilience measure demonstrates strong reliability and convergent validity.

Table 4.8 Factor Loadings, AVE, and CR for Resilience

Variables	Items	Factor loadings	AVE	CR
RE	RE1	0.768	0.600	0.937
	RE2	0.762		
	RE3	0.792		
	RE4	0.793		
	RE5	0.780		
	RE6	0.783		
	RE7	0.774		
	RE8	0.766		
	RE9	0.793		
	RE10	0.730		

* Note(s): CR = composite reliability; AVE = average variance extracted.

4.3.4 Confirmatory Factor Analysis Model of Career Future Time Perspective

Career future time perspective (CFTP) have 9 measurement items. After confirmatory factor analysis, Figure 4.4, Table 4.9, and Table 4.10 were obtained.

As Table 4.9 shown, the CFTP measurement model exhibits strong fit. The chi-square/df ratio is 1.603, within the <3 guideline, and RMSEA=0.032 indicates minimal approximation error. Absolute fit indices are high, and incremental indices are near unity. These support excellent correspondence between the model and the observed data.

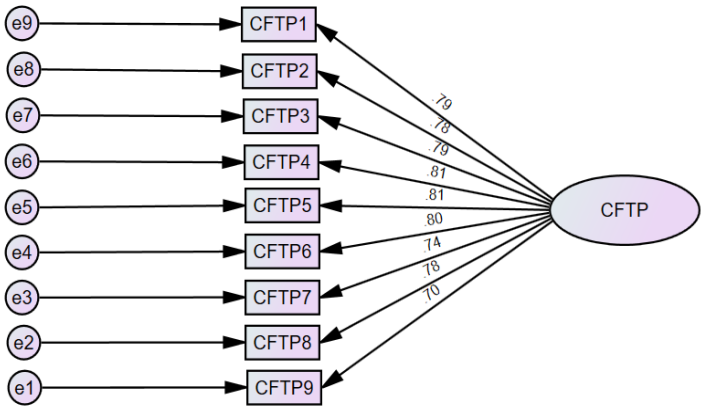

Figure 4.4 Confirmatory factor analysis model of career future time perspective

* Note(s): CFTP: career future time perspective.

Table 4.9 Model Fit Index of Career Future Time Perspectives

Fit Indices	Acceptable Range	Result	Model Fit
CMIN		43.280	
DF		27	
CMIN/DF	<3	1.603	Good
RMSEA	<0.08	0.032	Good
GFI	>0.9	0.984	Good
AGFI	>0.9	0.973	Good
NFI	>0.9	0.987	Good
IFI	>0.9	0.995	Good
TLI	>0.9	0.994	Good
CFI	>0.9	0.995	Good

Table 4.10 reports standardized factor loadings, AVE, and CR for the CFTP construct.

Table 4.10 Factor Loadings, AVE, and CR for Career Future Time Perspective

Variables	Items	Factor loadings	AVE	CR
Career Future	CFTP1	0.794	0.608	0.933
Time Perspective	CFTP2	0.782		
	CFTP3	0.795		
	CFTP4	0.809		
	CFTP5	0.808		
	CFTP6	0.801		
	CFTP7	0.743		
	CFTP8	0.778		
	CFTP9	0.704		

4.3.5 Confirmatory Factor Analysis Model of Innovation Climate

Innovation climate (IC) have 4 measurement items. After confirmatory factor analysis, Figure 4.5, Table 4.11, and Table 4.12 were obtained.

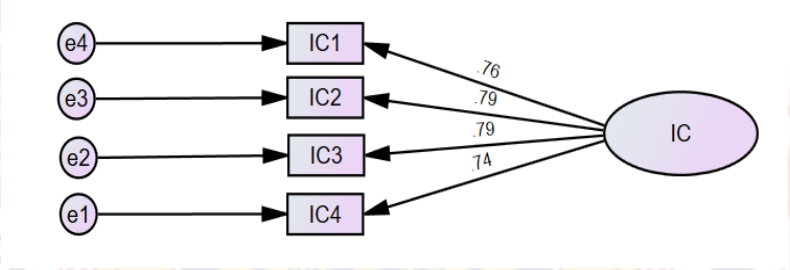

Figure 4.5 Confirmatory factor analysis model of innovation climate

* Note(s): IC: Innovation Climate

As shown in Table 4.11, The Innovation Climate measurement model shows an excellent fit. The chi-square/df ratio is 0.729, well under the <3 guideline. RMSEA=0.000 indicates negligible approximation error. Absolute fit indices are very high, and incremental indices are essentially unity. Values slightly above 1 for IFI and TLI are a known rounding artifact in near-perfect fits, especially with low degrees of freedom. The results strongly support the construct validity of the innovation climate measure.

Table 4.11 Model Fit Index of Innovation Climate

Fit Indices	Acceptable Range	Result	Model Fit
CMIN		1.458	
DF		2	
CMIN/DF	<3	0.729	Good
RMSEA	<0.08	0.000	Good
GFI	>0.9	0.999	Good
AGFI	>0.9	0.994	Good
NFI	>0.9	0.999	Good
IFI	>0.9	1.001	Good
TLI	>0.9	1.002	Good
CFI	>0.9	1.000	Good

Table 4.12 showed that all standardized factor loadings for innovation climate range from 0.744 to 0.793, exceeding the conventional 0.60 benchmark and indicating that each item contributes meaningfully to the construct. The AVE = 0.599 surpasses the 0.50 criterion, supporting satisfactory convergent validity. The CR = 0.856 is well above the 0.70 threshold, evidencing good internal consistency. These results indicated that the Innovation Climate measure demonstrates solid reliability and convergent validity.

Table 4.12 Factor Loadings, AVE, and CR for Innovation Climate

Variables	Items	Factor loadings	AVE	CR
Innovation Climate	IC1	0.764	0.599	0.856
	IC2	0.793		
	IC3	0.793		
	IC4	0.744		

* Note(s): CR = composite reliability; AVE = average variance extracted.

4.3.6 Confirmatory Factor Analysis Model of Emotional Exhaustion

To evaluate the construct validity of Emotional Exhaustion (EE), a confirmatory factor analysis (CFA) was conducted using nine measurement items (EE1-EE9). The model results are presented in Figure 4.6, while the goodness-of-fit indices are summarized in Table 4.13, and factor loadings with reliability indicators are listed in Table 4.14.

The model demonstrated a good overall fit to the data. The chi-square value produced a ratio of CMIN/DF = 2.098, which is within the acceptable range (<3). Other fit indices also met the recommended standards. All indices exceeded the commonly accepted threshold of 0.90, indicating that the single-factor model for Emotional Exhaustion fits the observed data well.

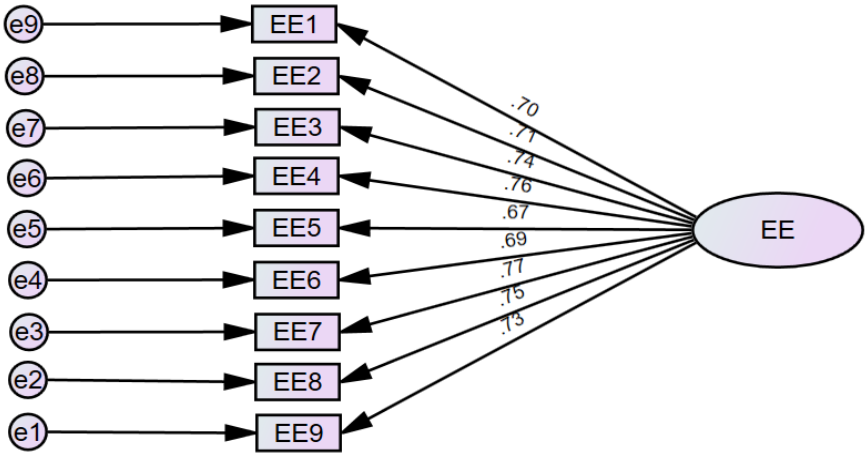

Figure 4.6 Confirmatory factor analysis model of emotional exhaustion

* Note(s): EE: emotional exhaustion.

Table 4.13 Model Fit Index of Emotional Exhaustion

Fit Indices	Acceptable Range	Result	Model Fit
CMIN		56.645	
DF		27	
CMIN/DF	<3	2.098	Good
RMSEA	<0.08	0.044	Good
GFI	>0.9	0.980	Good
AGFI	>0.9	0.966	Good
NFI	>0.9	0.978	Good
IFI	>0.9	0.988	Good
TLI	>0.9	0.984	Good
CFI	>0.9	0.988	Good

As shown in Table 4.14, the standardized factor loadings ranged from 0.672 to 0.765, all above the recommended level of 0.60, showing that each item was strongly associated with the latent construct. The Average Variance Extracted (AVE) was 0.525, which is higher than the 0.50 benchmark, suggesting that more than half of the variance in the items was explained by the construct. The Composite Reliability (CR) value was 0.908, well above the 0.70 threshold. The CFA results confirmed that the Emotional Exhaustion construct demonstrated good model fit, strong convergent validity, and high reliability. These results suggested that the measurement model is statistically sound and appropriate for inclusion in the subsequent structural model analysis.

Table 4.14 Factor Loadings, AVE, and CR for Emotional Exhaustion

Variables	Items	Factor loadings	AVE	CR
Emotional Exhaustion	EE1	0.700	0.525	0.908
	EE2	0.710		
	EE3	0.739		
	EE4	0.758		
	EE5	0.672		
	EE6	0.693		
	EE7	0.765		
	EE8	0.750		
	EE9	0.727		

* Note(s): CR = composite reliability; AVE = average variance extracted.

4.3.7 Confirmatory Factor Analysis Model of Intrinsic Motivation

A confirmatory factor analysis (CFA) was conducted to examine the construct validity of Intrinsic Motivation (IM), which included five measurement items (IM1–IM5). The results of the model fit are presented in Table 4.15, and the factor loadings, AVE, and CR values are shown in Table 4.16.

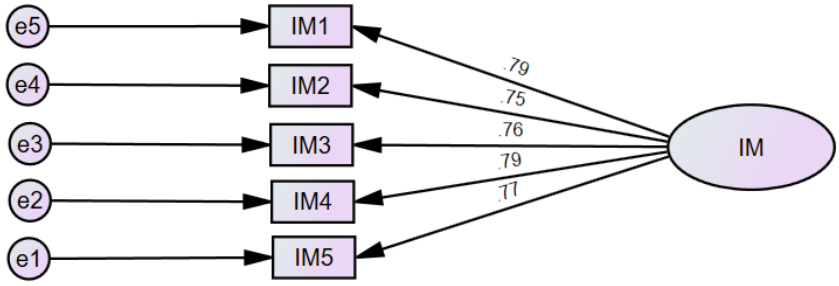

Figure 4.7 Confirmatory factor analysis model of intrinsic motivation

* Note(s): IM: intrinsic motivation.

The CFA results showed that the model fit the data extremely well, as shown in Table 4.16. The chi-square value (CMIN=3.051, DF=5) produced a ratio of CMIN/DF = 0.610, which was well below the recommended maximum of 3, indicating a very good fit. The RMSEA = 0.000, together with other fit indices all exceeded the threshold value of 0.90. These results suggested that the single-factor structure of Intrinsic Motivation fit the observed data very well and met the statistical standards for model adequacy.

Table 4.15 Model Fit Index of Intrinsic Motivation

Fit Indices	Acceptable Range	Result	Model Fit
CMIN		3.051	
DF		5	
CMIN/DF	<3	0.610	Good
RMSEA	<0.08	0.002	Good
GFI	>0.9	0.998	Good
AGFI	>0.9	0.994	Good
NFI	>0.9	0.998	Good
IFI	>0.9	0.988	Good
TLI	>0.9	0.984	Good
CFI	>0.9	0.985	Good

As shown in Table 4.16, all standardized factor loadings ranged from 0.752 to 0.794, which were above the recommended level of 0.60. This indicated that all items had strong relationships with the latent construct. The average variance extracted (AVE) value was 0.601, exceeding the minimum acceptable level of 0.50. The composite reliability

(CR) was 0.883, higher than the 0.70 threshold, confirming good internal consistency and measurement reliability for the intrinsic motivation scale. These findings indicated that the construct was statistically sound and suitable for inclusion in the subsequent structural model analysis.

Table 4.16 Factor Loadings, AVE, and CR for Intrinsic Motivation

Variables	Items	Factor loadings	AVE	CR
Intrinsic Motivation	IM1	0.794	0.601	0.883
	IM2	0.752		
	IM3	0.762		
	IM4	0.794		
	IM5	0.774		

* Note(s): CR = composite reliability; AVE = average variance extracted.

4.3.8 Confirmatory Factor Analysis Model of Innovative Work Behavior

A confirmatory factor analysis (CFA) was performed to test the construct validity of innovative work behavior (IWB), which included ten observed variables (IWB1-IWB10). The model fit statistics are summarized in Table 4.17, while the factor loadings, AVE, and CR values are presented in Table 4.18.

The results indicated that the model fitted the data well. The chi-square statistic yielded a ratio of CMIN/DF=1.316, which was within the acceptable range (<3). The RMSEA value was 0.023, suggesting a close fit to the data. Additionally, all other indices exceeded the recommended cutoff of 0.90. These results confirmed a well-fitting model.

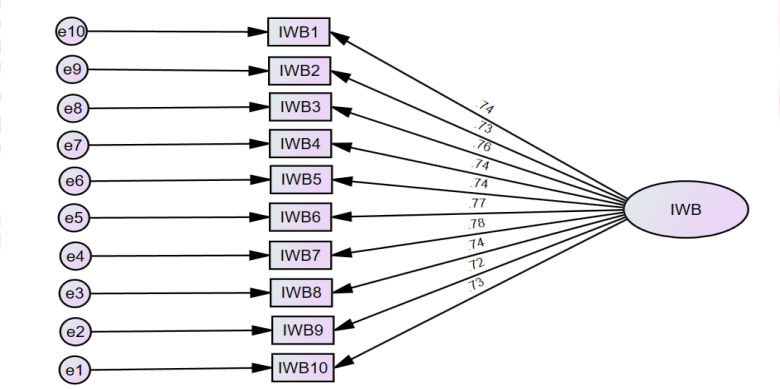

Figure 4.8 Confirmatory factor analysis model of innovative work behavior

* Note(s): IWB: innovative work behavior

Table 4.17 Model Fit Index of Innovative Work Behavior

Fit Indices	Acceptable Range	Result	Model Fit
CMIN		46.063	
DF		35	
CMIN/DF	<3	1.316	Good
RMSEA	<0.08	0.023	Good
GFI	>0.9	0.985	Good
AGFI	>0.9	0.976	Good
NFI	>0.9	0.986	Good
IFI	>0.9	0.997	Good
TLI	>0.9	0.996	Good
CFI	>0.9	0.997	Good

As displayed in Table 4.18, the standardized factor loadings ranged from 0.717 to 0.779, all above the 0.60 threshold, showing that each indicator was strongly associated with the latent variable. The AVE was 0.556, surpassing the 0.50 criterion and demonstrating good convergent validity. The CR was 0.926, which indicated excellent internal consistency among the items. These findings supported the construct's suitability for inclusion in the subsequent structural equation model.

Table 4.18 Factor Loadings, AVE, and CR for Innovative Work Behavior

Variables	Items	Factor loadings	AVE	CR
Innovative Work Behavior	IWB1	0.743	0.556	0.926
	IWB2	0.729		
	IWB3	0.764		
	IWB4	0.741		
	IWB5	0.739		
	IWB6	0.772		
	IWB7	0.779		
	IWB8	0.738		
	IWB9	0.717		
	IWB10	0.731		

* Note(s): CR = composite reliability; AVE = average variance extracted.

4.3.9 Confirmatory Factor Analysis Model of Overall Measurement Model

A confirmatory factor analysis (CFA) was conducted to examine the overall measurement model, which included eight latent variables and 57 observed indicators. The analysis results are presented in Figure 4.8, with the corresponding model fit indices summarized in Table 4.19. The CFA results showed that the overall measurement model fitted the data very well. The chi-square statistic yielded a ratio of CMIN/DF = 1.201, which was well below the recommended threshold of 3, suggesting a satisfactory fit. The RMSEA value was 0.019, further confirming the model's close fit. Other key indices also met the standard criteria: GFI = 0.905, AGFI = 0.896, NFI = 0.918, IFI = 0.985, TLI = 0.984, CFI = 0.985. Most indices exceeded the benchmark value of 0.90, and RMSEA were well below their respective cutoffs (0.08), demonstrating a strong overall model fit.

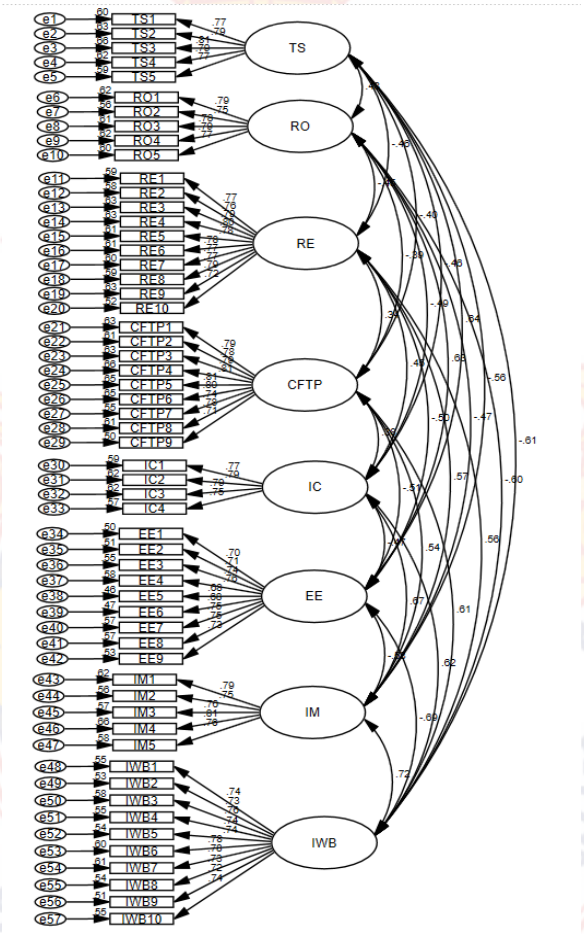

Figure 4.9 Confirmatory factor analysis model of overall measurement model

* Note(s): TS: technostress; RO: role overload; RE: resilience; CFTP: career future time perspective; IC: innovation climate; EE: emotional exhaustion; IM: intrinsic motivation; IWB: innovative work behavior.

Table 4.19 Model Fit Index of Overall Measurement Model

Fit Indices	Acceptable Range	Result	Model Fit
CMIN		1815.044	
DF		1511	
CMIN/DF	<3	1.201	Good
RMSEA	<0.08	0.019	Good
GFI	>0.9	0.905	Good
AGFI	>0.9	0.896	Good
NFI	>0.9	0.918	Good
IFI	>0.9	0.985	Good
TLI	>0.9	0.984	Good
CFI	>0.9	0.985	Good
SRMR	<0.05	0.033	Good

Table 4.20 presented the standardized factor loadings of all measurement items for the eight latent variables. As shown in the table, all standardized loadings ranged from 0.678 to 0.813, exceeding the commonly accepted minimum value of 0.60 (Hair et al., 2010). This result indicated that each observed item had a strong and significant relationship with its corresponding latent construct. The t-values (C.R.) for all items were greater than 1.96 and were significant at the $p < .001$ level (denoted by ***), confirming that all factor loadings were statistically significant. The standard errors were within acceptable ranges, suggesting stable parameter estimates. Among the constructs, the loading values of career future time perspective (CFTP) and intrinsic motivation (IM) were relatively high (mostly above 0.78), implying that these measurement items captured their respective latent variables well. Similarly, technostress (TS), resilience (RE), and innovative work behavior (IWB) also showed strong indicator reliability, with loadings consistently above 0.70. These results supported the convergent validity of the measurement model. The high and significant factor loadings indicated that the measurement items were appropriate indicators of their latent variables, providing a solid foundation for the subsequent SEM analysis.

Table 4.20 Standardized Factor Loading Table

Latent variables	**Items**	**Standardized loading**	**Standard error (S.E.)**	***t* (C.R.)**	***p***
TS	TS1	0.775	-	-	-
TS	TS2	0.793	0.050	19.934	***
TS	TS3	0.810	0.059	20.447	***
TS	TS4	0.790	0.055	19.598	***
TS	TS5	0.766	0.050	19.028	***
RO	RO1	0.790	-	-	-
RO	RO2	0.750	0.030	18.921	***
RO	RO3	0.782	0.032	19.874	***
RO	RO4	0.787	0.033	19.930	***
RO	RO5	0.773	0.036	19.451	***
RE	RE1	0.769	-	-	-
RE	RE2	0.761	0.051	19.447	***
RE	RE3	0.793	0.056	20.445	***
RE	RE4	0.796	0.062	20.547	***
RE	RE5	0.780	0.060	20.046	***
RE	RE6	0.782	0.059	20.138	***
RE	RE7	0.772	0.055	19.834	***
RE	RE8	0.771	0.060	19.785	***
RE	RE9	0.794	0.060	20.457	***
RE	RE10	0.720	0.049	18.293	***
CFTP	CFTP1	0.794	-	-	-
CFTP	CFTP2	0.779	0.044	20.765	***
CFTP	CFTP3	0.793	0.043	21.395	***
CFTP	CFTP4	0.810	0.039	21.925	***
CFTP	CFTP5	0.807	0.048	21.814	***
CFTP	CFTP6	0.805	0.040	21.656	***
CFTP	CFTP7	0.743	0.041	19.597	***
CFTP	CFTP8	0.778	0.043	20.757	***
CFTP	CFTP9	0.706	0.041	18.317	***

Table 4.20 (continued)

Latent variables	Items	Standardized loading	Standard error (S.E.)	*t* (C.R.)	*p*
IC	IC1	0.766	-	-	-
IC	IC2	0.787	0.053	18.694	***
IC	IC3	0.789	0.054	18.648	***
IC	IC4	0.753	0.053	17.866	***
EE	EE1	0.705	-	-	-
EE	EE2	0.712	0.060	16.204	***
EE	EE3	0.742	0.060	16.948	***
EE	EE4	0.760	0.070	17.330	***
EE	EE5	0.678	0.062	15.469	***
EE	EE6	0.682	0.061	15.640	***
EE	EE7	0.752	0.071	17.094	***
EE	EE8	0.753	0.060	17.159	***
EE	EE9	0.731	0.062	16.662	***
IM	IM1	0.789	-	-	-
IM	IM2	0.748	0.046	18.981	***
IM	IM3	0.757	0.046	19.294	***
IM	IM4	0.813	0.046	20.944	***
IM	IM5	0.764	0.046	19.437	***
IWB	IWB1	0.742	-	-	-
IWB	IWB2	0.727	0.059	17.718	***
IWB	IWB3	0.760	0.060	18.646	***
IWB	IWB4	0.744	0.057	18.170	***
IWB	IWB5	0.737	0.057	17.979	***
IWB	IWB6	0.775	0.053	19.002	***
IWB	IWB7	0.778	0.056	19.074	***
IWB	IWB8	0.735	0.059	17.954	***
IWB	IWB9	0.717	0.057	17.482	***
IWB	IWB10	0.739	0.056	18.079	***

* Note(s): S.E. = standard error; C.R. = critical ratio (t value). Standardized factor loadings were estimated using confirmatory factor analysis.From author's own work.

As shown in the tables above, the AVE values of these variables ranged from 0.525 to 0.619, all exceeding the recommended threshold of 0.50. This indicated that each construct explained more than half of the variance of its observed indicators, thereby demonstrating good convergent validity. The CR values ranged from 0.856 to 0.939, which were well above the acceptable cutoff value of 0.70. This confirmed that all constructs had strong internal consistency and reliable measurement properties. The results verified that the measurement model possessed both strong convergent validity and high reliability, ensuring that the eight latent constructs were measured consistently and accurately across all observed variables.

4.3.10 Correlation Analysis and Discrimination Validity

Table 4.21 presented the results of the Pearson correlation analysis and the square roots of the AVE for all constructs. According to the Fornell-Larcker criterion, discriminant validity is established when the square root of each construct's AVE is greater than its correlations with other constructs. As shown in the table, all diagonal values ranged from 0.725 to 0.787, and each of them was higher than the corresponding inter-construct correlation coefficients in the same row and column. This result indicated that each latent variable shared more variance with its own indicators than with any other construct, thereby satisfying the requirement for discriminant validity. In addition, most correlation coefficients were moderate and statistically significant at the $p < .01$ level, suggesting that while the constructs were related in meaningful ways, they remained empirically distinct. The results confirmed that the measurement model demonstrated adequate discriminant validity, complementing the earlier evidence of strong convergent validity and reliability.

Table 4.21 Pearson Correlation and Discriminant Validity Analysis

Variables	TS	RO	RE	CFTP	IC	EE	IM	IWB
TS	**0.787**							
RO	.424**	**0.777**						
RE	-.417**	-.414**	**0.778**					
CFTP	-.376**	-.361**	.328**	**0.780**				
IC	-.407**	-.424**	.412**	.358**	**0.774**			
EE	.615**	.592**	-.488**	-.523**	-.434**	**0.725**		
IM	-.525**	-.420**	.545**	.513**	.572**	-.525**	**0.775**	
IWB	-.573**	-.560**	.548**	.573**	.566**	-.688**	.683**	**0.746**

* Note(s): N=581, **: p<0.01, and the diagonal brackets are the square root of AVE value. TS = Technostress; RO = Role overload; RE = Resilience; CFTP = Career future time perspective; IC = Innovation climate; EE = Emotional exhaustion; IM = Intrinsic motivation; IWB = Innovative work behavior.

As shown in Table 4.22, to further examine discriminant validity, the eight-factor model was compared with a series of theoretically plausible alternative models in which conceptually related constructs were combined. All alternative models showed substantially poorer fit, as indicated by higher χ^2/df values, lower CFI and TLI values, and higher RMSEA values. Chi-square difference tests revealed that each alternative model fit the data significantly worse than the baseline model ($\Delta\chi^2$ ranged from 1025.376 to 4828.385 with Δdf ranging from 7 to 18, all $p < .001$). These results provide strong support for the discriminant validity of the constructs and further alleviate concerns regarding construct distinctiveness.

Table 4.22 Model Fit Results of Confirmatory Factor Analyses

Model	X^2/DF	CFI	TLI	RMSEA	Model comparison	Δx^2	Δdf
1. Eight Factors: TS, RO, RE, CFTP, IC , EE, IM, IWB (baseline model)	1.191	0.986	0.985	0.018	—	—	—
2. Seven Factors: TS+ RO, RE, CFTP, IC , EE, IM, IWB	1.861	0.936	0.933	0.039	2vs1	1025.376	7

Table 4.22 (continued)

Model	X^2/DF	CFI	TLI	RMSEA	Model comparison	Δx²	Δdf
3. Seven Factors: TS, RO, RE+ CFTP, IC , EE, IM, IWB	3.318	0.841	0.833	0.061	3vs1	2963.238	7
4. Six Factors: TS+RO, RE+CFTP, IC , EE, IM, IWB	3.798	0.791	0.781	0.069	4vs1	3988.503	13
5. Five Factors: TS+RO, RE+CFTP+ IC , EE, IM, IWB	4.335	0.750	0.751	0.076	5vs1	4828.385	18
6. Single Factor: TS+RO+RE +CFTP+IC+EE+ IM+IWB	13.792	—	—	0.149	—	—	—

* Note(s): Δ reflects the variation from the measurement model, χ^2/df = chi-square divided by degrees of freedom; RMSEA = Root Mean Square Error of Approximation, CFI = Comparative Fit Index, TLI = Tucker–Lewis Index. TS = Technostress; RO = Role overload; RE = Resilience; CFTP = Career future time perspective; IC = Innovation climate; EE = Emotional exhaustion; IM = Intrinsic motivation; IWB = Innovative work behavior.

The results of the confirmatory factor analyses demonstrated that the measurement model had good overall fit, high reliability, and both convergent and discriminant validity. Therefore, the constructs were considered suitable for subsequent SEM to test the hypothesized relationships.

4.3.11 Common Method Bias Test

Common method bias (CMB) can potentially introduce bias into the collected data in questionnaire-based research. If the variance explained by a single factor obtained through exploratory factor analysis does not exceed 50%, the risk of serious common method bias is reduced (Podsakoff et al., 2003). This study used the Harman single-factor method and found that the first factor explained 23.287% of the variance, which is below the critical threshold 50%, indicating that common method bias is unlikely to be severe in this sample, but it cannot be completely ruled out given the reliance on self-reported, single-source data.

4.4 Test of Hypotheses

Based on existing literature and theoretical foundations, this study constructed a structural equation model (SEM) with innovative work behavior (IWB) of higher vocational teachers. The model takes IWB as the dependent variable and selects seven latent variables as influencing factors, and combines theoretical logic to construct multiple direct and indirect path relationships. The specific model is as shown in Figure 4.10.

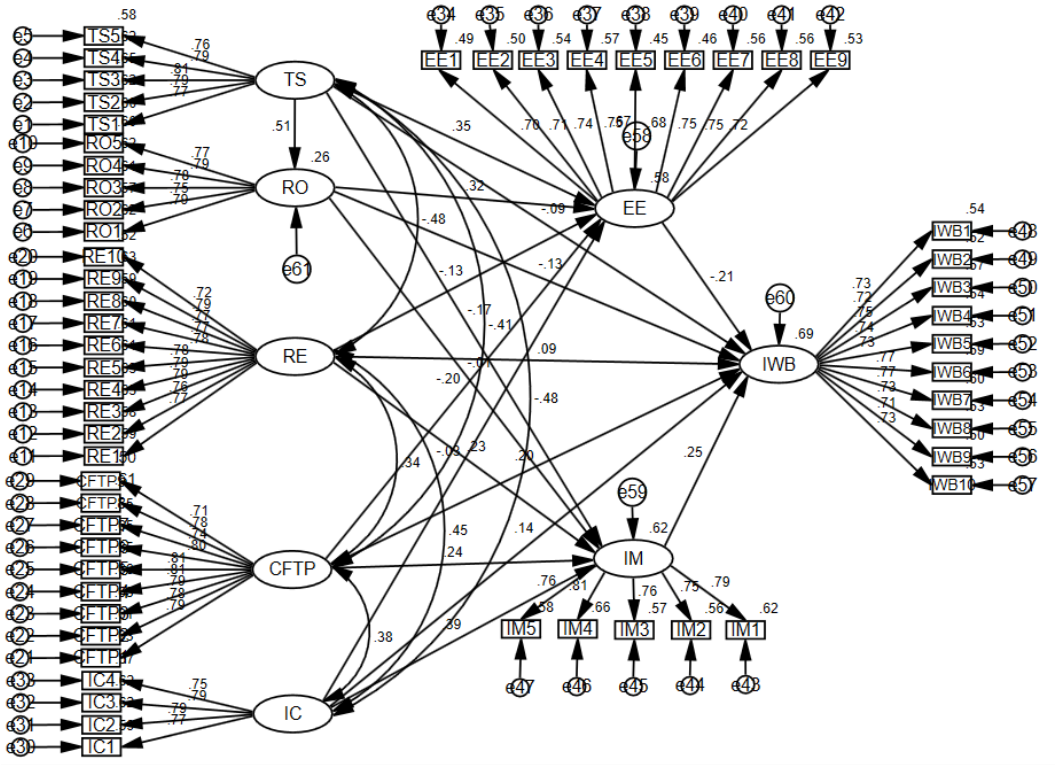

Figure 4.10 Structural equation model results

4.4.1 Model Fit

The overall model fit indices support a satisfactory correspondence between model and data (Table 4.23). The chi-square to degrees-of-freedom ratio (χ^2/df) is 1.252, below the conventional 3.0 benchmark for good fit. The RMSEA is 0.021, indicative of close fit under common guidelines, and the SRMR is 0.051, slightly above the strict 0.05 cut-off yet well within the generally accepted <0.08 range. Incremental and comparative indices are consistently high—GFI = 0.902, NFI = 0.914, IFI = 0.981, CFI = 0.981, TLI = 0.980—all exceeding the 0.90 threshold typically interpreted as good fit. Although AGFI = 0.893 falls marginally short of 0.90, taken together with the very small RMSEA and favorable χ^2/df the evidence warrants an overall positive fit assessment. Recognizing the sensitivity

of χ^2 to sample size, fit is evaluated using a multiple-index approach rather than any single statistic.

Table 4.23 Overall Model Fit Indices (SEM)

Fit Indices	Acceptable Range	Result	Model Fit
CMIN		1897.017	
DF		1515	
CMIN/DF	<3	1.252	Good
GFI	>0.9	0.902	Good
AGFI	>0.9	0.893	Acceptable
RMSEA	<0.08	0.021	Good
IFI	>0.9	0.981	Good
NFI	>0.9	0.914	Good
TLI	>0.9	0.980	Good
CFI	>0.9	0.981	Good
SRMR	<0.05	0.051	Acceptable

*Note(s): CMIN = chi-square; DF = degrees of freedom; GFI = goodness-of-fit index; AGFI = adjusted goodness-of-fit index; RMSEA = root mean square error of approximation; IFI = incremental fit index; NFI = normed fit index; TLI = Tucker–Lewis index; CFI = comparative fit index; SRMR = standardized root mean square residual.

4.4.2 Direct Effects

Given the satisfactory overall model fit (Table 4.24), the structural model was estimated in AMOS using maximum likelihood to test the direct relations among technostress (TS), role overload (RO), resilience (RE), career future time perspective (CFTP), innovation climate (IC), emotional exhaustion (EE), intrinsic motivation (IM), and innovative work behavior (IWB). Maximum likelihood estimation was applied to assess the hypothesized direct paths. Standardized and unstandardized estimates, standard errors (S.E.), critical ratios (C.R.), and p-values were evaluated. The results indicated that the structural model demonstrated satisfactory explanatory power, explaining 69.2% of the variance in innovative work behavior (IWB), 62.1% in intrinsic motivation (IM), 58.5% in emotional exhaustion (EE). All reported coefficients and significance levels are presented in Table 4.28.

Technostress had a significant positive influence on emotional exhaustion (EE) (β=0.347, p < .001), providing support for H6, and a significant negative impact on intrinsic motivation (IM) (β=−0.175, p < .001), supporting H13. Moreover, technostress negatively impacted innovative work behavior (IWB) (β=−0.091, p = .039), confirming H1. The results also showed that technostress (TS) had a significant positive effect on role overload (RO) (β= 0.510, p < .001), supporting H20. This path represented the largest coefficient among the demand-related relationships, suggesting that technostress is closely related to teachers' perceptions of role overload. Role overload (RO) exhibited a significant positive effect on emotional exhaustion (EE) (β= 0.322, p < .001), supporting H7, and a significant negative effect on innovative work behavior (IWB) (β=−0.128, p = .002), supporting H2. However, its effect on intrinsic motivation was not significant (β=−0.009, p=0.826), indicating that H14 was not supported.

Resilience (RE) showed a significant negative relationship with emotional exhaustion (EE) (β=−0.129, p = .001), providing support for H15, and a significant positive relationship with intrinsic motivation (IM) (β=0.228, p < 0.001), supporting H8. In addition, resilience positively affected innovative work behavior (IWB) (β= 0.091, p = .014), confirming H3. Career future time perspective (CFTP) exhibited a significant negative effect on emotional exhaustion (EE) (β=−0.203, p < .001), supporting H16, and significant positive effects on intrinsic motivation (IM) (β=0.242, p < .001) and innovative work behavior (IWB) (β= 0.201, p < .001), providing support for H9 and H4 respectively. Innovation climate (IC) was found to significantly enhance intrinsic motivation (IM) (β= 0.386, p < .001;), confirming H10, and to positively influence innovative work behavior (IWB) (β=0.145, p = .001), supporting H5. The IC→IM path had the strongest coefficient among the resource-related predictors of motivation, highlighting the salience of organizational context for intrinsic motivation. However, the path from innovation climate to emotional exhaustion (EE) was not significant (β=−0.029, p = .502), indicating that H17 was not supported.

Emotional exhaustion (EE) demonstrated a significant negative effect on innovative work behavior (IWB) (β=−0.214, p < .001), thus supporting H11. In contrast, intrinsic motivation (IM) had a significant positive effect on innovative work behavior (IWB) (β= 0.250, p < .001), providing support for H12. These results indicated that both

motivational and strain-related states are significantly associated with IWB in the hypothesized relationships.

The results above indicated that most hypothesized direct relationships were statistically significant and consistent with theoretical expectations. Specifically, technostress and role overload, representing job demands, are associated with greater emotional exhaustion and with lower innovative work behavior. Technostress is also linked to lower intrinsic motivation, whereas the direct association between role overload and intrinsic motivation is not statistically significant. Resilience and career future time perspective, as personal resources, exerted positive effects on intrinsic motivation and innovative work behavior while reducing emotional exhaustion. Similarly, innovation climate, as an organizational resource, enhanced intrinsic motivation and innovative work behavior, though its direct effect on emotional exhaustion was not significant. Both emotional exhaustion and intrinsic motivation served as predictors of innovative work behavior, the former negatively and the latter positively. Overall, sixteen of the eighteen direct hypotheses (H1-H17, H20) were supported, while H14 and H17 were not. These results establish a solid empirical foundation for subsequent testing of the mediating mechanisms.

Table 4.24 Standardized Direct Effects with 95% Confidence Intervals

Hypothesis	Path	Estimate (β)	S.E.	C.R.	*p*	Results
H1	TS→IWB	-0.091	0.037	-2.060	0.039	Supported
H2	RO→IWB	-0.128	0.039	-3.166	0.002	Supported
H3	RE→IWB	0.091	0.056	2.459	0.014	Supported
H4	CFTP→IWB	0.201	0.028	5.371	<.001	Supported
H5	IC→IWB	0.145	0.038	3.268	0.001	Supported
H6	TS→EE	0.347	0.024	7.170	<.001	Supported
H7	RO→EE	0.322	0.026	7.157	<.001	Supported
H8	RE→IM	0.228	0.078	5.593	<.001	Supported
H9	CFTP→IM	0.242	0.036	6.274	<.001	Supported
H10	IC→IM	0.386	0.050	8.356	<.001	Supported
H11	EE→IWB	-0.214	0.081	-4.363	<.001	Supported
H12	IM→IWB	0.250	0.043	4.664	<.001	Supported

Table 4.24 (continued)

Hypothesis	Path	Estimate (β)	S.E.	C.R.	*p*	Results
H13	TS→IM	-0.175	0.048	-3.868	<.001	Supported
H14	RO→IM	-0.009	0.051	-0.220	0.826	Not-supported
H15	RE→EE	-0.129	0.037	-3.204	0.001	Supported
H16	CFTP→EE	-0.203	0.017	-5.236	<0.001	Supported
H17	IC→EE	-0.029	0.022	-0.672	0.502	Not-supported
H20	TS→RO	0.510	0.041	10.627	<.001	Supported

* Note(s): TS = Technostress; RO = Role overload; RE = Resilience; CFTP = Career future time perspective; IC = Innovation climate; EE = Emotional exhaustion; IM = Intrinsic motivation; IWB = Innovative work behavior. Estimates are standardized coefficients. S.E. = standard error; C.R. = critical ratio. β= standardized coefficient.

4.4.3 Indirect Effects

To assess the mediating roles of emotional exhaustion and intrinsic motivation in the associations between the five independent variables and innovative work behavior, bias-corrected bootstrap mediation analyses were conducted based on 5,000 resamples. An indirect effect was considered statistically significant if its 95% confidence interval did not include zero. The results were shown in Table 4.25.

For technostress, two significant indirect effects on innovative work behavior were identified. The indirect effect through emotional exhaustion was β= -0.075 (SE=0.018, 95% CI [-0.116, -0.042]), and the indirect effect through intrinsic motivation was β = -0.044 (SE = 0.015, 95% CI [-0.084, -0.020]). Both confidence intervals excluded zero, indicating that technostress affected innovative work behavior via increased emotional exhaustion and reduced intrinsic motivation, thereby supporting H18a and H19d. Notably, the indirect effect via emotional exhaustion was larger in magnitude than the indirect effect via intrinsic motivation.

In the case of role overload, the indirect effect on innovative work behavior through emotional exhaustion was statistically significant (β = -0.069, SE = 0.018, 95% CI [-0.111, -0.038]), supporting H18b. However, the indirect effect through intrinsic motivation was not significant (β = -0.002, SE=0.011, 95% CI [-0.024, 0.018]), as the confidence interval included zero. Therefore, H19e was not supported. Thus, the effect of role overload on

innovative work behavior was transmitted primarily through emotional exhaustion rather than intrinsic motivation.

Resilience demonstrated significant indirect effects on innovative work behavior through both mediators. The indirect effect via emotional exhaustion was β = 0.028 (SE = 0.011, 95% CI [0.011, 0.054]), and the effect via intrinsic motivation was β = 0.057 (SE = 0.018, 95% CI [0.028, 0.097]). As both confidence intervals excluded zero, H18c and H19a were supported. The indirect effect via intrinsic motivation was larger than that via emotional exhaustion, suggesting a comparatively stronger motivational pathway for resilience.

Career future time perspective also exhibited significant indirect effects through both emotional exhaustion and intrinsic motivation. The indirect effect via emotional exhaustion was β = 0.044 (SE = 0.012, 95% CI [0.023, 0.074]), and the indirect effect via intrinsic motivation was β = 0.061 (SE = 0.017, 95% CI [0.031, 0.100]). These results provide support for H18d and H19b. Comparing the two pathways, the indirect effect through intrinsic motivation was somewhat larger than that through emotional exhaustion. In contrast, innovative climate showed a significant indirect effect on innovative work behavior only through intrinsic motivation (β= 0.097, SE = 0.025, 95% CI [0.053, 0.152]), supporting H19c. The indirect effect via emotional exhaustion was not significant (β= 0.006, SE = 0.009, 95% CI [-0.010, 0.024]), thus H18e was not supported.

Table 4.25 Standardized Indirect and Total Effects with 95% Confidence Intervals

Pathway	**Indirect Effect (*β*)**	**95% confidence interval**		***p***	**Total Effect (*β*)**	**95% confidence interval**		***p***	**Test Conclusion**
		LLCI	**ULCI**			**LLCI**	**ULCI**		
TS→EE→IWB	-0.075	-0.116	-0.042	***	-0.209	-0.292	-0.122	***	Partial Mediation
TS→IM→IWB	-0.044	-0.084	-0.020	***	-0.209	-0.292	-0.122	***	Partial Mediation
RO→EE→IWB	-0.069	-0.111	-0.038	***	-0.199	-0.283	-0.298	***	Partial Mediation
RO→IM→IWB	-0.002	-0.024	0.018	0.802	-0.199	-0.283	-0.298	***	No Mediation

Table 4.25 (continued)

Pathway	Indirect Effect (β)	95% confidence interval		p	Total Effect (β)	95% confidence interval		p	Test Conclusion
		LLCI	ULCI			LLCI	ULCI		
RE→EE→IWB	0.028	0.011	0.054	***	0.176	0.101	0.250	***	Partial Mediation
RE→IM→IWB	0.057	0.028	0.097	***	0.176	0.101	0.250	***	Partial Mediation
CFTP→EE→IWB	0.044	0.023	0.074	***	0.305	0.233	0.375	***	Partial Mediation
CFTP→IM→IWB	0.061	0.031	0.100	***	0.305	0.233	0.375	***	Partial Mediation
IC→EE→IWB	0.006	-0.010	0.024	0.407	0.248	0.168	0.330	***	No Mediation
IC→IM→IWB	0.097	0.053	0.152	***	0.248	0.168	0.330	***	Partial Mediation

* Note(s): $p < 0.001$. Effects are standardized. EE = Emotional exhaustion; IM = Intrinsic motivation; TS = Technostress; RO = Role overload; RE=Resilience; CFTP= Career future time perspective; IC = Innovative climate.

As shown above, most supported mediation patterns were partial mediation. Partial mediation is indicated when the indirect effect is statistically different from zero, while the direct effect remains after accounting for the mediators. This suggests that the mediators explain only part of the mechanism linking the predictor to the outcome, and that other mediating processes may also be operating (Hayes, 2018). Therefore, the results indicated that emotional exhaustion and intrinsic motivation explain only part of the effects of the predictors on IWB. The remaining direct effects implied that additional mediating mechanisms may also be operating but were not modeled in the present study, for example through individuals' cognitive appraisal of demands, supportive social-contextual conditions, or self-regulatory coping efforts.

In summary, emotional exhaustion significantly mediated the effects of technostress, role overload, resilience, and career future time perspective on IWB (supporting H18a-H18d), but not the effect of innovation climate (H18e not supported). Intrinsic motivation significantly mediated the effects of resilience, career future time

perspective, innovation climate, and technostress on IWB (supporting H19a-H19d), but not the effect of role overload (H19e not supported). The present findings reveal two distinct psychological pathways through which the predictors influence innovative work behavior. Emotional exhaustion appears to mediate the effects of stress-inducing conditions (e.g. technostress, role overload), aligning with a resource depletion process. In contrast, intrinsic motivation mediates the effects of positive individual and contextual resources (e.g. resilience, career future time perspective, and innovative climate), consistent with a motivation-enhancing mechanism.

The final research framework is shown in Figure 4.11, based on the hypothesis verification process.

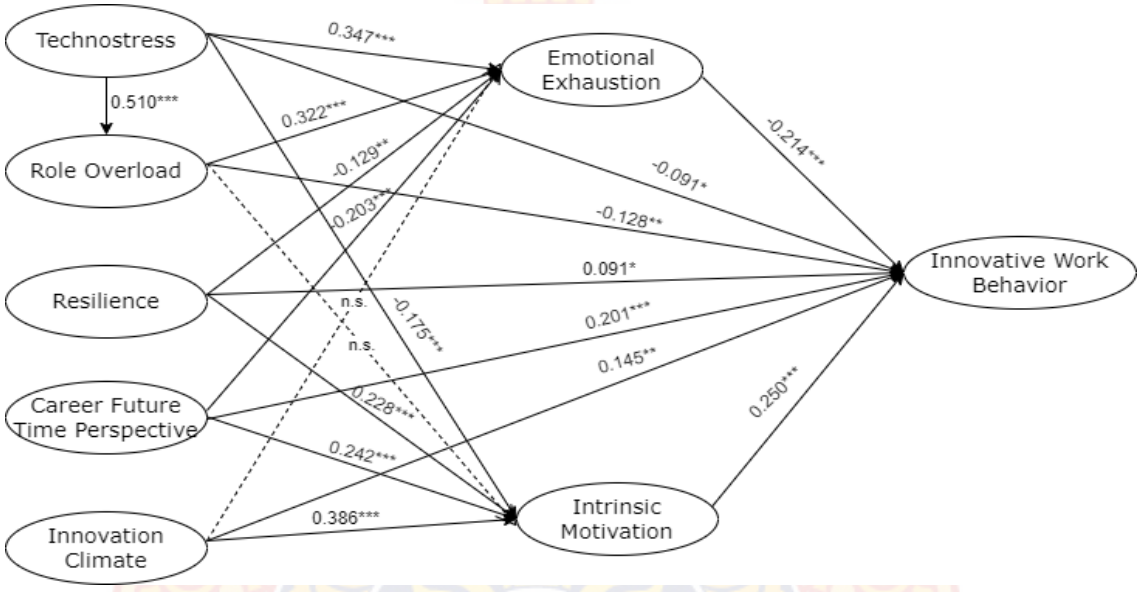

Figure 4.11 Structural path model of the hypothesized relationships.

The hypothesis verification results are shown in Table 4.26 below.

Table 4.26 Summary of Hypothesis Test Results

Hypotheses	Research hypothesis	Results
H1	Technostress has a negative effect on innovative work behavior.	Supported
H2	Role overload has a negative effect on innovative work behavior.	Supported

Table 4.26 (continued)

Hypotheses	Research hypothesis	Results
H3	Resilience has a positive effect on innovative work behavior.	Supported
H4	Career future time perspective has a positive effect on innovative work behavior.	Supported
H5	Innovation climate has a positive effect on innovative work behavior.	Supported
H6	Technostress has a positive effect on emotional exhaustion.	Supported
H7	Role overload has a positive effect on emotional exhaustion.	Supported
H8	Resilience has a positive effect on intrinsic motivation.	Supported
H9	Career future time perspective has a positive effect on intrinsic motivation.	Supported
H10	Innovation climate has a positive effect on intrinsic motivation.	Supported
H11	Emotional exhaustion has a negative effect on innovative work behavior.	Supported
H12	Intrinsic motivation has a positive effect on innovative work behavior.	Supported
H13	Technostress has a negative effect on intrinsic motivation.	Supported
H14	Role overload has a negative effect on intrinsic motivation.	Not supported
H15	Resilience has a negative effect on emotional exhaustion.	Supported
H16	Career future time perspective has a negative effect on emotional exhaustion.	Supported
H17	Innovation climate has a negative effect on emotional exhaustion.	Not supported
H18a	Emotional exhaustion mediates the relationship between technostress and innovative work behavior.	Supported
H18b	Emotional exhaustion mediates the relationship between role overload and innovative work behavior.	Supported

Table 4.26 (continued)

Hypotheses	Research hypothesis	Results
H18c	Emotional exhaustion mediates the relationship between resilience and innovative work behavior.	Supported
H18d	Emotional exhaustion mediates the relationship between career future time perspective and innovative work behavior.	Supported
H18e	Emotional exhaustion mediates the relationship between innovative climate and innovative work behavior.	Not supported
H19a	Intrinsic motivation mediates the relationship between resilience and innovative work behavior.	Supported
H19b	Intrinsic motivation mediates the relationship between career future time perspective and innovative work behavior.	Supported
H19c	Intrinsic motivation mediates the relationship between innovation climate and innovative work behavior.	Supported
H19d	Intrinsic motivation mediates the relationship between technostress and employees' innovative work behavior.	Supported
H1 9e	Intrinsic motivation mediates the relationship between role overload and employees' innovative work behavior.	Not supported
H20	Technostress has a positive effect on role overload.	Supported

4.5 Conclusion

This chapter presented the empirical findings of the study based on questionnaire data analyzed using SPSS 26.0 and AMOS 26.0. Descriptive statistics, correlation analysis, and confirmatory factor analysis were conducted to examine the characteristics of the data and to establish the reliability and validity of the measurement model. Structural equation modeling was subsequently applied to test the hypothesized relationships among the study variables. Building on the proposed theoretical framework, the study systematically examined the direct and indirect relationships among job demands, job resources, psychological mechanisms, and innovative work behavior. Overall, these

findings provide robust empirical support for the proposed theoretical framework and form a solid basis for the discussion in the following chapter.

Part of the empirical findings reported in this chapter has been peer-reviewed and published in an indexed academic journal, African Educational Research Journal (Vol. 14, No. 1, pp. 39–54, doi:10.5281/zenodo.18348200), further demonstrating the academic rigor and scholarly contribution of this research. Overall, this chapter consolidates the core empirical outcomes of the study and provides a solid foundation for the subsequent discussion and conclusion.

CHAPTER 5
DISCUSSION AND CONCLUSION

This section is directly aligned with the objectives established in Chapter 1. Specifically, Research Objective 1 aimed to examine the influence of technostress, role overload, resilience, career future time perspective, and innovation climate on teachers' innovative work behavior in higher vocational colleges, while Research Objective 2 sought to verify the mediating roles of emotional exhaustion and intrinsic motivation in these relationships. Therefore, this chapter interprets the findings in relation to these two objectives, clarifies how the empirical results answer the research questions, and demonstrates how the study contributes to a deeper understanding of the mechanisms shaping teachers' innovative work behavior in the context of higher vocational education. This chapter consists of five sections: discussion, theoretical implications, practical implications, limitations of this study, and implications for future research.

5.1 Discussion of the Main Hypotheses

5.1.1 The Effects of Job Demands on Teachers' IWB

The findings of this study indicated that technostress was negatively associated with innovative work behavior among vocational college teachers in China, thereby supporting H1. This pattern is consistent with prior research suggesting that technostress may constrain innovation by depleting psychological resources, weakening cognitive control, and reducing individuals' capacity or willingness to engage in discretionary, effortful activities such as experimentation and implementation of new ideas (Hamid, 2024; Zhang, 2023). From a social cognitive perspective, technostress has also been linked to diminished self-efficacy, which may undermine confidence in handling complex technology-related challenges and, in turn, reduce innovation-oriented initiative (Zhang, 2023). In addition, technostress may indirectly inhibit innovation by disrupting knowledge sharing and collaborative learning processes that often facilitate idea generation and refinement (Song et al., 2023).

A contextual interpretation is that, for Chinese vocational college teachers, technology is frequently experienced as an externally imposed work requirement rather than a core component of professional identity. New systems can introduce additional burdens such as steep learning curves, troubleshooting, and administrative data reporting (Kupang et al.2024). When such demands are coupled with inadequate support, they may consume cognitive and temporal resources that would otherwise be available for pedagogical experimentation and innovation, and may also increase fatigue and frustration.

At the same time, evidence from other contexts suggests that the technostress-innovation relationship is not uniform. Forza et al. (2023), for example, reported that moderate levels of technostress were positively related to innovation among Indonesian technology employees and freelancers. Relatedly, the notion of techno-eustress emphasizes that some technology-related demands can be experienced as constructive and growth-oriented, thereby supporting engagement and innovative performance (Khan & Shamsi, 2022; Tarafdar et al., 2019). These findings are not necessarily inconsistent with the present results; rather, they implied that the consequences of technostress depend on appraisal and resource conditions. When technology-related demands are moderate and enabling resources such as training, technical assistance, and a supportive innovation climate are available, technology pressure may be more likely to be experienced as challenge-like and to facilitate learning and adaptability (Tarafdar et al., 2019; Nastjuk et al., 2024). In contrast, the negative association observed in this study likely reflects conditions in which technostress is experienced as relatively excessive or insufficiently supported, highlighting boundary conditions involving both organizational resources and individual differences (Chou & Chou, 2021; Yang et al., 2025).

Moreover, teachers are unlikely to experience technology demands in the same way. Responses to technology pressures may vary with digital familiarity and confidence, which can differ across cohorts and career stages. For instance, teachers with greater exposure to digital tools—often more common among younger cohorts (e.g., Generation Y/Z)—may perceive certain technology-related demands as more manageable, whereas less digitally confident teachers may be more likely to appraise the same demands as hindrances (Tzafilkou et al., 2023). This competence-related heterogeneity provides a theoretically grounded explanation for variability in effect magnitudes across contexts and

samples, and it warrants further examination in future research. Therefore, the results suggested that technostress is best understood as context-dependent and person-dependent. In the present sample, the overall negative association likely represents an average pattern in which technology demands frequently co-occur with heavy administrative requirements and limited support, making them more likely to be experienced as hindrance-like demands that constrain innovative work behavior.

Additionally, the results indicated that role overload was negatively associated with innovative work behavior among higher vocational college teachers in China, thereby supporting H2. This pattern is consistent with recent COR-informed evidence showing that role overload tends to operate as a hindrance-like demand that elevates psychological strain and undermines performance when demands exceed available resources (Tang & Vandenberghe, 2021). Under such conditions, overload is likely to crowd out teachers' time and cognitive bandwidth for discretionary, effortful activities such as idea generation, experimentation, and implementation—key components of innovative work behavior. This interpretation aligns with contemporary evidence that hindrance stressors impair performance directly and indirectly via strain processes (Pindek et al., 2024).

Importantly, the implications of role overload are not uniform but depend on resource and appraisal conditions. In contexts with stronger job resources, including information control, team control, and supportive conditions, role overload may be less uniformly detrimental and may function as a challenge-like demand when resources facilitate coping and goal attainment (Lattrich & Büttgen, 2020). In educational settings, however, overload is often intertwined with non-instructional administrative tasks that intensify perceived resource scarcity; recent evidence from China highlights the persistence of extra-administrative workload and its links with emotional exhaustion among teachers (Zhu & Wang, 2024). When overload accumulates in the absence of compensatory resources such as protected time, administrative support, or appropriate rewards, it is more likely to be appraised as hindrance-like and thus negatively associated with innovation.

This context-based interpretation helps explain why our findings differ from those reported in other occupational settings. According to Clarke and Higgs (2020), there was a positive association between role overload and innovative work behavior among junior doctors, which may reflect resource-rich conditions such as higher autonomy and stronger

professional control that facilitate challenge appraisals. Overall, our results suggested that role overload is most likely to constrain teacher innovation when it co-occurs with resource scarcity and strain, whereas more supportive resource conditions may alter how overload is experienced and its downstream implications.

5.1.2 The Effects of Job Resources on IWB

The findings also highlight the crucial role of job resources in fostering teachers' IWB. The present study revealed that resilience had a significant positive effect on innovative work behavior among vocational college teachers, supporting H3. This indicated that individuals with higher resilience levels are more likely to engage in innovative thinking, experimentation, and solution-seeking, even when faced with uncertainty or adversity. This finding was consistent with numerous previous studies. For example, it was found by Uppathampracha (2022) that a significant positive association between employee resilience and IWB in the banking sector. Similarly, according to Reddy and Chan (2023), resilient knowledge workers tend to exhibit greater levels of innovative work behavior. In a study of employees at Islamic banks in Indonesia, sustained innovation efforts were found to be supported by resilience through strengthening individuals' capacity to cope with challenges and setbacks (Suhandiah et al., 2023). Similarly, innovative behaviors were shown to be effectively fostered through organizational efforts aimed at enhancing employee resilience (Nassani et al., 2024). Among professional homemakers, the ability to "bounce back" from difficulties and persist in pursuing innovation was also attributed to resilience (Puspa et al., 2023).

These findings reinforced the notion that resilience served as a core psychological resource that empowers individuals to remain adaptive, open to new ideas, and emotionally stable when encountering stress, failure, or criticism—conditions often inherent to innovation processes. Resilient individuals were more inclined to perceive difficulties as opportunities for growth rather than insurmountable obstacles. As such, they are more willing to take risks, propose novel solutions, and persist toward innovative goals with determination. This resonated with the innovation demands placed on vocational teachers during education reform and pedagogical transformation. The findings also supported the theoretical framework of positive organizational behavior (POB), as proposed by Luthans (2002), which emphasizes the role of measurable, developable, and manageable psychological capacities such as resilience in improving individual and organizational

performance. By empirically validating the link between resilience and IWB in the vocational education context, this study expanded the applicability of POB theory and highlighted the potential of resilience as a psychological capital that can be cultivated to promote innovation in educational settings.

The findings of this study also demonstrated a significant positive effect of career future time perspective on innovative work behavior among higher vocational college teachers. While prior research such as Park et al. (2021) emphasized moderating role of career future time perspective between negative emotions and innovative work behavior, the direct predictive power of career future time perspective on IWB was less explored. This study filled that gap by confirming that individuals who perceive greater opportunities and time in their career future are more inclined to engage in innovation-related behaviors, particularly in the educational context.This result was aligned with previous studies on general future time perspective. For instance, innovative tendencies were found to be more likely to be exhibited by employees with stronger future orientation across the banking, healthcare, and consulting sectors (Mrisho et al., 2023; Li et al., 2025). The present study advanced this understanding by establishing the direct role of career-specific future perspective in shaping teachers' innovation.

Theoretically, this relationship can be understood through socioemotional selectivity theory (SST). According to SST, individuals with an open-ended time horizon were more focused on long-term goals such as knowledge acquisition and self-development. For vocational teachers, a future-focused mindset encourages proactive engagement with pedagogical reform and emerging challenges. From a motivational standpoint, those who anticipate a meaningful and evolving career future are more likely to take initiative, experiment with new ideas, and sustain innovation efforts despite setbacks. This reflected that future-directed goals increase the perceived instrumentality of present actions, enhancing behavioral activation.

Moreover, the findings of this study confirmed that innovation climate had a significant and positive effect on innovative work behavior among vocational college teachers, supporting H5. This conclusion was well-supported by prior empirical research, which consistently identifies innovation climate—defined as the shared perception of organizational support for innovation—as a critical antecedent of IWB (Lecic et al., 2023; Srirahayu et al., 2023). For example, IWB among Malaysian managers was found to be

significantly enhanced by an organizational culture that supports innovation (Shanker et al., 2017). Similarly, a strong positive effect of innovation climate on IWB was observed in Turkey's ICT sector (Onhon, 2019), and comparable findings were reported within Uganda's local government institutions (Musenze et al., 2024).

A supportive innovation climate encourages open communication, risk-taking, idea generation, and provides necessary resources, thereby creating a psychologically safe environment. In such contexts, individuals are less afraid of failure or ridicule and are more willing to engage in innovation-related activities. This environment not only reduces fear of repercussions but also fosters autonomy, which empowers individuals to take ownership of their ideas and work processes. As a result, individuals are more likely to engage in extra-role behaviors such as IWB. This study added to the existing literature by validating these effects within the context of vocational education, where innovative work behavior may manifest through novel teaching methods, curriculum design, practical training models, and industry collaboration approaches. Despite contextual differences, the core principle remains consistent: a strong innovation climate enables and motivates innovation.

5.1.3 The Effects of Job Demands on Emotional Exhaustion and Intrinsic Motivation

This study found that technostress significantly contributed to emotional exhaustion among vocational college teachers, supporting H6. This result was consistent with a growing body of literature emphasizing the psychological burden of digital work demands. Prior research had consistently shown that technostress is positively associated with emotional fatigue across diverse occupational settings, including coaching professionals (Michalik & Schermuly, 2023), maritime employees (Li et al., 2025), and teachers (Califf & Brooks, 2020). These studies confirmed that sustained exposure to technological stressors can erode emotional resilience and lead to exhaustion.

The job demands–resources (JD-R) theory offers a useful lens for interpreting this relationship. Technostress embodies a set of job demands—such as techno-overload, techno-invasion, techno-complexity, and techno-uncertainty—that require continuous cognitive and emotional investment. Over time, this depletes individual resources, producing feelings of fatigue, frustration, and psychological strain. For instance, techno-overload and techno-complexity were identified as key drivers of negative emotional

states, including anxiety and discouragement (Sarabadani et al., 2020). The present study reinforced these patterns within the vocational education context, where rapid digitalization may place additional pressure on teachers to adapt, often without sufficient support or training. These findings highlighted the need for institutional responses that mitigate the emotional toll of technology use in teaching—through supportive infrastructure, professional development, and clear expectations regarding digital engagement.

Moreover, the results of this study confirmed a significant positive relationship between role overload and emotional exhaustion among vocational college teachers, supporting H7. This finding aligned with a substantial body of empirical research demonstrating that role overload functions as a key predictor of emotional exhaustion or burnout across various occupational settings. For instance, emotional exhaustion among employees was found to be significantly increased by role overload (Kacmar et al., 2020), and a similar effect was reported among supervisors (Rafique, 2022). Among special education teachers in Saudi Arabia, a direct and significant impact of role overload on emotional exhaustion was also indicated, largely attributable to overwhelming workloads such as excessive student numbers, coordination responsibilities, and administrative burdens (Alyamy & Cheong, 2020). These findings resonated strongly with the teaching profession, particularly in the vocational education context. Higher vocational college teachers are often required to juggle multiple demands simultaneously—ranging from instructional delivery and student mentoring to research obligations, administrative duties, and digital teaching adaptation. When these demands exceed teachers' available time, energy, or capacity, role overload emerges as a powerful stressor that depletes emotional resources.

The conservation of resources (COR) theory offered a compelling explanation for this dynamic. According to COR theory, stress arises when individuals perceive a threat to their resources, experience actual resource loss, or fail to gain adequate returns after resource investment. Role overload reflects a situation where resources are consumed rapidly and are difficult to replenish, eventually leading to emotional exhaustion—characterized by fatigue, emotional depletion, and psychological strain. It was further argued that role overload is predominantly depleting and often elicits reactions ranging from mild anxiety to more severe emotional distress (Tang & Vandenberghe, 2021).

Consistent with hypothesis 13, this study found that technostress has a significant negative impact on vocational college teachers' intrinsic motivation. This result aligns with existing literature highlighting the detrimental effects of technostress on employees' psychological and motivational states. Empirical evidence from various contexts supports this finding. It was reported by Hessari and Nategh (2022) that a significant negative correlation between technostress and work motivation among engineering professionals. Similarly, motivation for online teaching among higher education faculty was found to be reduced by technostress (Boyer-Davis, 2023). Collectively, these studies indicated that heightened technostress can erode individuals' willingness to engage in meaningful work. Moreover, research has consistently linked technostress with broader negative outcomes such as burnout, reduced job satisfaction, diminished organizational commitment, decreased productivity, and increased turnover intentions (Jena, 2015; Salo et al., 2019). As these negative states accumulate, they undermine intrinsic motivation by diminishing enjoyment, interest, and engagement with work tasks.

This relationship can be theoretically explained using Conservation of Resources (COR) Theory, which posits that individuals seek to preserve and protect their limited resources. Technostress, characterized by techno-overload, techno-invasion, techno-complexity, techno-insecurity, and techno-uncertainty, imposes continuous cognitive and emotional demands. For vocational teachers, this may include pressure to be constantly available, difficulties mastering new technologies, or anxiety about obsolescence. As resources are drained by these stressors, teachers may struggle to find satisfaction or meaning in their work, thereby weakening their intrinsic motivation. This study extends prior research by confirming the negative impact of technostress on motivational states within the vocational education context and underscores the importance of organizational strategies to alleviate technostress and sustain teachers' intrinsic drive.

Contrary to hypothesis 14, this study found no significant relationship between role overload and intrinsic motivation among vocational college teachers. This result challenges the assumption rooted in conservation of resources (COR) theory, which posits that role overload—as a key job demand—depletes individuals' psychological resources and undermines their basic psychological needs, thereby reducing intrinsic motivation. However, similar nonsignificant findings have been reported in previous literature. For instance, no significant negative relationship between role overload and basic

psychological need satisfaction among Malaysian teachers was found, which indirectly supported the result of the present study (Yap, 2010). Among professional chefs, intrinsic motivation was also observed to remain stable under high workload conditions, provided that a sense of career satisfaction was experienced (Daşkın et al., 2023). These findings suggest that a positive perception of one's profession may serve as an internal buffer, enabling motivation to be sustained despite demanding workloads. Interestingly, psychological well-being among young Nigerian employees was found to be positively predicted by role overload (Onuoha & Attah, 2023). They argued that younger workers may view heavy workloads as opportunities for personal growth and achievement rather than as stressors, highlighting a potential reinterpretation of role overload as a challenge rather than a hindrance.

In the vocational education context, this reframing may also apply. Vocational college teachers are often accustomed to high-intensity, multitasking work environments, and may derive a sense of accomplishment from handling complex responsibilities. Their unique job characteristics, professional culture, and institutional expectations could shape a more adaptive response to role overload. Furthermore, the impact of role overload on intrinsic motivation may be moderated by cognitive appraisal, individual traits, or organizational factors—diluting its expected negative effect. This unexpected finding invites further exploration into the psychological mechanisms through which role overload operates and offers a new perspective for understanding how vocational educators interpret and respond to demanding roles.

5.1.4 The Effects of Job Resources on Emotional Exhaustion and Intrinsic Motivation

This study confirmed a significant positive relationship between resilience and intrinsic motivation among higher vocational college teachers, supporting H8. These findings were supported by prior empirical studies across different contexts. For instance, Park et al. (2023), in a study of medical students, found that resilience positively influenced intrinsic motivation, which in turn affected psychological well-being and academic stress. Their findings established a significant positive correlation between these two constructs, consistent with our results. Similarly, self-determined forms of motivation—including intrinsic motivation—were found to be positively associated with resilience among volleyball players, underscoring the broader relevance of this relationship (Trigueros et

al., 2020). In the vocational education context, teachers often face multiple challenges such as practice-oriented teaching, industry collaboration, rapid shifts in curriculum aligned with market demands, and intensive student support duties. Under such pressures, resilience becomes a critical psychological resource that enables teachers to remain engaged, passionate, and motivated in their work. Teachers with high resilience are more likely to maintain a positive outlook, persevere through setbacks such as under-resourced environments or weak student foundations, and derive personal satisfaction from overcoming such challenges. This ongoing sense of achievement can, in turn, strengthen their intrinsic motivation. This mechanism resembles what Park et al. (2023) observed in medical students—namely, that resilience plays a buffering and motivational role in high-pressure settings. In addition, a conceptual interlinkage between resilience and motivation was emphasized, with the potential for mutual influence to be exerted directly or indirectly (Özbey et al., 2023). In line with these perspectives, the current findings suggest a resilience-driven motivation pathway. That is, resilient teachers are more likely to sustain their sense of purpose and professional commitment, which enhances their intrinsic enjoyment and engagement in teaching. These findings extend the theoretical understanding of motivation by emphasizing resilience as a foundational enabler of intrinsic drive, particularly in high-demand educational environments like vocational colleges.

Moreover, this study found that career future time perspective significantly and positively influences intrinsic motivation among vocational college teachers, supporting H9. This result aligns with emerging empirical findings in the literature. Notably, despite an initial hypothesis that a negative association would exist between occupational future time perspective and intrinsic motivation—on the grounds that intrinsic motivation is present-focused whereas future-oriented thinking may shift attention elsewhere—a significant positive correlation between the two was ultimately reported (Van Pelt, 2022). Our study extends this finding by showing that career future time perspective, as a domain-specific manifestation of future time perspective in the career context, positively predicts intrinsic motivation in the teaching profession. Career future time perspective emphasizes individuals' valuation of their future careers, the perceived link between current actions and future outcomes, and their expectations of future success. Conceptually, it is closely aligned with occupational future time perspective in that both reflect an individual's

cognitive orientation toward career-related futures. When these future goals are inherently meaningful—such as striving for autonomy, mastery, or social contribution—they can reinforce intrinsic interest in current activities. This is consistent with Zhao et al. (2025), who found a moderate positive relationship between generalized future time perspective and intrinsic learning motivation among nursing students.

For vocational teachers, if their current teaching and professional efforts are perceived as integral to achieving future personally meaningful goals—such as becoming an expert educator, shaping student success, or realizing educational ideals—then their future-oriented thinking will likely strengthen intrinsic interest and persistence in their work. Our findings thus offer new empirical support for the positive relationship between career future time perspective and intrinsic motivation, expanding the theoretical and practical understanding of motivational dynamics in the vocational education sector.

This study also found that innovation climate significantly and positively influences intrinsic motivation among higher vocational college teachers, supporting H10. This result is strongly supported by prior empirical studies across various professional and educational contexts, highlighting the critical role of a supportive organizational environment in fostering intrinsic drive. For instance, a significant positive correlation between innovation climate and achievement motivation—an established form of intrinsic motivation—was found among nursing professionals, providing direct evidence of this relationship (Fu et al., 2025). Similarly, the effect of innovation climate and innovation orientation on innovative work behavior was shown to be mediated by intrinsic motivation, underscoring innovation climate as an important antecedent of intrinsic drive (Xu et al., 2022). Within the education sector, intrinsic motivation and creativity among public and private school teachers were found to be predicted by school innovation climate (Fidan & Oztürk, 2015). In addition, innovative work behavior among university faculty was found to be significantly predicted by a supportive organizational climate, with a mediating role being played by intrinsic motivation (Awan & Ahmad, 2023). Collectively, these findings affirm the generalizability of innovation climate as a driver of intrinsic motivation across professional and cultural settings.

Theoretically, a strong innovation climate—marked by managerial support, tolerance for failure, resource availability, and collaborative openness—creates conditions that satisfy core psychological needs as defined by self-determination theory (SDT):

autonomy, competence, and relatedness. In such environments, vocational teachers are more likely to perceive their teaching and research tasks as engaging, meaningful, and self-directed. This leads to greater intrinsic interest and motivation to innovate. The findings from this study thus extend existing theory by validating the SDT framework within the context of vocational education. They also provide practical implications for educational institutions: fostering a climate of innovation is not only critical for encouraging innovative work behavior, but also for sustaining the intrinsic motivation that underlies long-term professional engagement and excellence.

In line with hypothesis 15, the study found a significant negative relationship between resilience and emotional exhaustion among vocational college teachers. This findings are consistent with a growing body of empirical evidence highlighting resilience as a key protective factor against emotional exhaustion. For example, Jeong and Song (2022) found that higher levels of resilience were associated with lower levels of emotional exhaustion among nurses during the COVID-19 pandemic in South Korea. Similarly, Choi et al. (2018) reported a significant negative correlation between resilience and emotional exhaustion in a cross-sectional study of Korean nurses, suggesting that resilience may serve a buffering function against psychological strain. Further supporting this view, Dehghanizadeh et al. (2023) demonstrated that resilience indirectly reduced emotional exhaustion through its negative impact on job stress in Iranian frontline healthcare workers. In the higher education context, emotional exhaustion was found to be managed more effectively by resilient online educators in South Africa through the setting of work-life boundaries, the adaptation of pedagogical approaches, and the creative use of technology rather than the replication of traditional methods (Scheepers & van den Berg, 2025). Together, these studies reinforce the role of resilience in protecting individuals from burnout in high-stress environments.

From a theoretical perspective, COR Theory explains this mechanism well: when individuals face resource threats or losses, they experience stress and emotional depletion. Resilience, as a key personal resource, enhances individuals' capacity to cope with adversity, recover from strain, and preserve emotional energy. Similarly, the job demands–resources (JD-R) Model highlights how personal resources like resilience can buffer the negative impact of job demands on well-being. Thus, the current findings affirm that resilience plays a vital role in mitigating emotional exhaustion among vocational college

teachers, underscoring its value as a psychological resource in demanding educational contexts.

Consistent with hypothesis 16, this study found that career future time perspective has a significant negative effect on emotional exhaustion among higher vocational college teachers in China. This result aligns with the general literature on future time perspective and extends its application to the vocational education context. Although prior research on the direct relationship between career future time perspective and emotional exhaustion is limited, related studies have consistently demonstrated that general future time perspective negatively predicts burnout in various domains. For example, in academic settings, lower levels of academic burnout were reported by Chinese university students with higher future time perspective, with this association being mediated by increased engagement (Hong, 2025). Similarly, a significant negative correlation between future time perspective and learning burnout was confirmed in a large sample of college students (Yang et al., 2023). In occupational contexts, job burnout among Chinese clinical nurses was found to be significantly reduced by future time perspective (Xie et al., 2024). Likewise, athlete burnout among Chinese adolescent athletes was found to be negatively predicted by future time perspective (Yi et al., 2025). These studies suggest that in professions requiring long-term commitment and consistent effort, future time perspective functions as a motivational and cognitive resource that buffers against emotional exhaustion.

In this study, career future time perspective serves as a contextualized form of future time perspective, focusing specifically on how individuals perceive their future within their career trajectory—such as their belief in career growth, meaning, and opportunities. This future-oriented mindset allows teachers to reframe present challenges (e.g., heavy workloads, emotional demands) as temporary obstacles rather than hopeless conditions, thereby reducing the psychological strain that leads to exhaustion. From a theoretical standpoint, this finding supports the conservation of resources (COR) theory, which posits that individuals with strong psychological resources are better equipped to prevent or mitigate resource depletion. A strong sense of career future thus serves as a protective cognitive-emotional resource, helping vocational educators navigate stress while maintaining emotional balance.This study provides valuable empirical evidence for the role of career future time perspective in preventing emotional exhaustion, offering practical insights for improving teacher well-being in vocational education settings.

The findings of this study do not support H17, which hypothesized that innovation climate would have a negative effect on emotional exhaustion. This result stands in contrast to existing literature, which generally suggests that a positive organizational climate or work resources act as a buffer against emotional exhaustion. For example, the negative impact of leadership on emotional exhaustion was found to be exacerbated under a high team innovation climate (Huang et al., 2024). Similarly, burnout was shown to be significantly reduced by an academic fairness climate—a form of positive organizational climate (Zhang et al., 2024). Furthermore, a negative correlation between psychosocial safety climate and emotional exhaustion was confirmed in the healthcare sector (Zadow et al., 2023). These studies collectively suggest that a positive work environment can help alleviate emotional exhaustion.

However, in the case of vocational college teachers, this study found that there was no significant relationship between the innovation climate and emotional exhaustion, indicating that H17 was not supported in this context. This result is not entirely unique, as Koch and Adler (2018) in their longitudinal study also found that certain work conditions did not produce the expected differential effects on emotional exhaustion or innovation, contradicting their hypothesis. This suggests that the relationship between organizational factors and employee mental health may be more complex than anticipated, and not all positive work conditions universally reduce emotional exhaustion.Moreover, while prior studies have focused on the impact of innovation climate on innovative work behavior, fewer have examined its direct effect on emotional exhaustion. This highlights the possibility that the impact of innovation climate on emotional exhaustion may not be as straightforward or direct.

The lack of significant findings in this study could be due to several factors. First, compared to high-tech industries, research and development teams, or traditional service sectors, innovation activities in vocational colleges tend to focus more on teaching methods, curriculum design, and school-enterprise cooperation models rather than disruptive technological innovations. This type of innovation may not generate the same emotional impact as in other fields. For vocational college teachers, innovation is likely seen as part of their routine teaching responsibilities rather than an additional source of stress, potentially diminishing its effect on emotional exhaustion. Additionally, the emotional exhaustion of vocational teachers may be driven more by fundamental work

pressures—such as workload, interpersonal relationships, or career development—than by an "innovation climate."

5.1.5 The Mediating Effect of Emotional Exhaustion

This study found that emotional exhaustion significantly and negatively predicts innovative work behavior (IWB) among higher vocational college teachers, supporting H11. Empirical evidence supports this conclusion. For example, IWB was found to be negatively predicted by emotional exhaustion, as emotionally depleted employees tend to disengage from work and reduce their participation in innovation-related tasks (Xie et al., 2024). When emotional resources are drained by hindrance stressors, effort may be withdrawn, thereby weakening innovation-related engagement and outcomes. Similarly, job anxiety—manifested through low mood, despair, and emotional fatigue—was shown to be induced by workplace incivility and exclusion, which in turn was associated with diminished IWB (Samma et al., 2020).

However, contrasting evidence was found in the study by Saputra and Rozyanti (2022), who reported a significant positive relationship between emotional exhaustion and IWB among Millennial and Gen Z employees. They argued that for younger workers who actively seek challenges and aim to exceed expectations, exhaustion might act as a stimulus for creative problem-solving and innovation. This inconsistency could be explained by demographic and contextual differences—such as age, occupation, and cultural background. Vocational college teachers, in contrast to younger knowledge workers, may not perceive exhaustion as a challenge but rather as a signal of resource depletion, prompting them to conserve energy by withdrawing from innovation.

The findings of this study align well with conservation of resources theory (COR), which posits that individuals strive to protect their existing resources when they are threatened or lost. Emotional exhaustion, characterized by depleted psychological and physical energy, may lead teachers to perceive innovation activities as additional demands requiring effort they cannot afford. As a result, they may disengage from IWB to conserve remaining resources.The results also resonate with the energy depletion process described in the job demands-resources (JD-R) Model. According to this model, high job demands—such as workload, changing instructional practices, and limited support—consume personal resources and lead to burnout and emotional exhaustion. When demands outstrip

available resources, individuals are less likely to engage in cognitively and emotionally taxing activities like innovation.

The results of this study reveal that emotional exhaustion significantly mediates the relationship between technostress and innovative work behavior supporting H18a, which aligns with the job demands-resources (JD-R) theory. According to this theory, job demands such as technostress deplete individual resources, leading to negative work outcomes. Previous research supports this mechanism, with studies such as Zhang et al. (2022) showing that technostress, through job exhaustion, impacts negative behaviors like knowledge hiding, which contradict innovation. Similar findings by Saputra and Rozyanti (2022), and Wang et al. (2023), further confirm that exhaustion mediates the relationship between stress and various work outcomes. In the context of vocational college teachers, the high-pressure environment created by digital transformation and multiple teaching responsibilities intensifies technostress, leading to emotional exhaustion, which in turn stifles innovation. This study provides strong empirical evidence for the mediating role of emotional exhaustion in the relationship between technostress and innovative work behavior.

Additionally, the results of this study revealed that emotional exhaustion significantly mediates the relationship between role overload and innovative work behavior, supporting H18b. This finding aligns with both JD-R theory and COR theory, which suggest that excessive work demands deplete individual resources, negatively affecting proactive work behaviors such as innovation. Emotional exhaustion was also examined as a mediator between role overload and health outcomes among civil servants (Huang et al., 2021). This study further validates the mediating role of emotional exhaustion in the context of role overload, especially considering that role overload is often categorized as a hindrance stressor, which aligns with the findings of Xie et al. (2024), where emotional exhaustion acted as a mediator in the relationship between hindrance stress and innovative work behavior. These findings emphasize that role overload depletes resources, leading to emotional exhaustion, which in turn reduces individuals' ability and willingness to engage in innovative behaviors. Additionally, other studies, such as Samma et al. (2020) and Mehmood et al. (2023), highlight that negative psychological states, including emotional exhaustion, serve as mediators in the relationship between work

stressors and innovation, reinforcing the importance of emotional exhaustion as a key mechanism.

Consistent with H18c, the results of this study showed that emotional exhaustion mediates the relationship between resilience and innovative work behavior. The results are consistent with previous literature. For instance, innovative work behavior was found to be negatively predicted by emotional exhaustion, which was also identified as a key mediator between hindering stressors and innovation (Xie et al., 2024). In addition, the relationship between workplace stressors and innovation was shown to be mediated by negative psychological states such as emotional exhaustion (Mehmood et al., 2023). These findings reinforce the idea that emotional exhaustion plays a significant mediating role in the pathway from stressors to reduced innovative work behavior. This finding contributes new empirical evidence for understanding how resilience, as a critical personal resource, influences innovative work behavior by emotional exhaustion.

The results of this study also support H18d, indicating that emotional exhaustion mediates the relationship between career future time perspective and innovative work behavior. This finding is consistent with prior research that has identified emotional exhaustion as a mediator. For example, a significant mediating role of academic burnout between future time perspective and academic achievement was identified (Hong, 2025). While academic achievement differs from innovative work behavior, the underlying theoretical logic—that a positive time perspective reduces burnout to promote positive outcomes—provides important support for our conclusions.

This study confirms the mediating role of emotional exhaustion between career future time perspective and innovative work behavior, filling a gap in the existing literature. When individuals possess a positive career future time perspective, they tend to have hope and plans for their professional development, which becomes a critical psychological resource. This forward-looking attitude allows them to better cope with current work challenges, protecting their emotional resources and reducing the risk of emotional exhaustion. When emotional exhaustion levels are low, individuals have more psychological energy, cognitive resources, and a positive mindset, making them more willing to engage in innovative activities that require creativity and exploration. Conversely, high levels of emotional exhaustion deplete these valuable resources, making it more difficult to engage in innovation. Thus, career future time perspective influences

emotional exhaustion, which in turn indirectly affects innovative work behavior, forming a clear psychological pathway. This aligns with the conservation of resources (COR) theory, positioning career future time perspective as a key psychological resource that helps vocational college teachers accumulate and protect emotional resources, preventing emotional exhaustion and fostering innovative work behavior.

However, the results of this study do not support H18e which showed that emotional exhaustion does not mediate the relationship between innovative climate and innovative work behavior. This finding contrasts with some existing literature that suggests emotional exhaustion (or burnout) often serves as a key psychological mechanism linking work environment factors to employee behavioral outcomes. For example, the effect of the work environment on researchers' innovative performance was found to be fully mediated by academic fairness climate through work burnout (a form of emotional exhaustion), underscoring emotional well-being as a critical mechanism linking positive organizational climate to innovation outcomes (Zhang et al., 2024). One possible explanation is that the innovative climate may directly activate positive resources within individuals, such as enhancing their sense of professional value, passion, and achievement motivation, rather than working through the reduction of negative emotions like emotional exhaustion. This indicates that, in the context of vocational colleges, the influence of innovative climate on innovative work behavior may be more focused on positive activation mechanisms, rather than alleviating negative psychological states.

5.1.6 The Mediating Effect of Intrinsic Motivation

This study demonstrated that intrinsic motivation significantly and positively predicts innovative work behavior (IWB) among vocational college teachers, supporting H12. Several prior studies have reported similar conclusions. A strong positive relationship between intrinsic motivation and IWB was found among employees in the Dutch Ministry of Defence (Buijs, 2022). A comparable positive effect was also confirmed in a sample of employees in Jakarta (Nilasari et al., 2022). In addition, motivation—particularly intrinsic motivation—was emphasized as a key predictor of IWB in a prior review (Siregar et al., 2019), and the psychological mechanisms through which intrinsic motivation fosters workplace innovation were further highlighted (Alshahrani et al., 2025). Within the education sector, innovative teaching behaviors were found to be more likely to be enacted by teachers reporting higher levels of intrinsic motivation (Bawuro et al.,

2019; Prasetyo & Purwoto, 2024). These findings support the cross-contextual relevance of intrinsic motivation as a driver of IWB, including in the context of vocational education.

Teachers who find meaning, enjoyment, and satisfaction in their work are more inclined to explore new ideas, experiment with novel teaching methods, and seek creative strategies to meet students' diverse learning needs. Such internally driven engagement goes beyond fulfilling routine teaching tasks—it encourages proactive, future-oriented thinking and continuous pedagogical improvement. By confirming the positive effect of intrinsic motivation on IWB in the vocational education context, this study contributes valuable empirical evidence to the existing literature and offers practical insight for educational administrators.

This study found that intrinsic motivation significantly mediates the relationship between resilience and innovative work behavior among vocational college teachers, supporting H19a. While this path has been rarely directly tested in existing literature, several studies provide strong theoretical support and indirect evidence to help understand how resilience stimulates intrinsic motivation, thereby enhancing innovative work behavior. From an individual psychological mechanism perspective, the relationship between autonomy and innovative work behavior was highlighted as being mediated by resilience (Suhandiah et al., 2023). Although this study did not directly examine intrinsic motivation, autonomy is a core component of intrinsic motivation in Self-Determination Theory. Therefore, their findings can be seen as indirect support for our path, suggesting that the motivational tendencies stimulated by resilience possess intrinsic properties, guiding individuals to exhibit more innovative behaviors at work.

Additionally, Wang et al. (2024) explored the impact of prosocial motivation on innovative work behavior and found that prosocial motivation, as a form of intrinsic motivation, is a key driver for individuals to engage in and execute innovative tasks. Given the context of our study, highly resilient teachers are likely to maintain their intrinsic interest in the task and prosocial motivation, even when facing uncertainty and failure in the innovation process. This sustained motivation helps them remain committed to innovation activities. This study thus extends existing research on the mechanisms of intrinsic motivation by positioning resilience as a precursor of intrinsic motivation. It emphasizes the role of individual resources in promoting innovative work behavior, expanding the boundaries of current research on intrinsic motivation. While Wang et al.

(2024) and Liu et al. (2024) focused more on organizational or leadership factors that stimulate intrinsic motivation to enhance innovation performance, this study emphasizes the role of individual-level resources. Specifically, resilience, as a stable positive psychological trait, enhances intrinsic motivation in vocational college teachers when facing work stress and innovation challenges, ultimately promoting innovative work behavior. Therefore, this study offers new insights and empirical support for understanding the drivers of innovation in the educational context.

This study provided empirical evidence that intrinsic motivation mediates the relationship between career future time perspective and innovative work behavior among vocational college teachers, supporting H19b. This finding is significant as it addresses a gap in the existing literature, as no previous studies have directly examined this mediating path. The findings also aligned with some studies that examine the mediating role of intrinsic motivation. Intrinsic motivation is widely recognized as a key driver of individual innovation and performance. For instance, Shi et al. (2023) found that intrinsic motivation partially mediates the relationship between age and proactive work behavior. Since innovative work behavior is typically considered a proactive behavior, this finding provides useful support for our results. Similarly, Saeed et al. (2019) highlighted the interaction between intrinsic motivation and psychological empowerment in the relationship between transformational leadership and innovative work behavior. This further reinforces the role of intrinsic motivation as a critical mechanism linking positive psychological traits to work behaviors. These studies emphasize the central role of intrinsic motivation in transforming various positive inputs into innovative outputs. Notably, our findings closely align with a study of nursing students by Nilasari et al. (2022), which found that intrinsic learning motivation significantly mediated the relationship between future time perspective and classroom non-participation behavior. While the study sample and outcome variable differ, the core mechanism—future time perspective influencing behavior through intrinsic motivation—closely matches our findings.

The core mechanism suggested by self-determination theory (Ryan & Deci, 2020) posits that when an individual's basic psychological needs—autonomy, competence, and relatedness—are fulfilled, intrinsic motivation is triggered. This study extended self-determination theory by highlighting the role of career future time perspective as a psychological resource that fosters a future-oriented perspective, thus increasing teachers'

intrinsic motivation and, subsequently, their engagement in innovative behaviors. Teachers with a high career future time perspective are likely to set long-term career goals and invest effort toward achieving them. This future orientation encourages teachers to engage in tasks that challenge their creativity and innovative potential. Our findings aligned with Andre (2018), who emphasized that future time perspective significantly influences work outcomes by motivating individuals to pursue long-term career goals. This study fills an important gap in the research literature by directly testing the mediation of intrinsic motivation in the relationship between career future time perspective and innovative work behavior, thereby providing new empirical evidence for understanding the psychological mechanisms behind innovation in educational contexts.

Consistent with H19c, this study revealed that intrinsic motivation mediates the relationship between innovation climate and innovative work behavior among higher vocational college teachers. This finding was supported by several existing empirical studies. Many studies have shown that intrinsic motivation serves as a key mediator between various antecedents and innovative work behavior. For example, Awan and Ahmad (2024) explicitly stated that intrinsic (and extrinsic) motivation partially mediates the relationship between organizational climate and university teachers' innovative work behavior. Wang et al. (2024) found that intrinsic motivation plays a significant mediating role between high-performance work systems and innovation performance, suggesting that high-performance work systems enhance innovation performance by stimulating and reinforcing intrinsic motivation. Similarly, Afsar and Umrani (2020), although focusing on "learning motivation," emphasized its close connection to intrinsic motivation and found that learning motivation partially mediates the relationship between transformational leadership and innovative work behavior. These studies collectively highlighted the role of intrinsic motivation as a core psychological mechanism that translates external situational support into internal drive, thereby promoting innovation. In the context of vocational college teachers, this implied that schools can stimulate teachers' intrinsic motivation by optimizing teaching autonomy and providing innovation resources, which in turn promotes their innovative work behavior. This study offered important insights into how organizational contexts can foster innovative behaviors through individuals' internal psychological mechanisms, specifically by leveraging intrinsic motivation as a critical factor in the innovation process.

This study revealed that intrinsic motivation mediates the relationship between technostress and innovative work behavior among higher vocational college teachers, supporting H19d. Previous research has widely pointed out that technostress, as a disruptive stressor, negatively impacts employees' work motivation. For example, Hessari and Nategh (2024) found a significant negative impact of technostress on work motivation among engineers in Iran. Similarly, Boyer-Davis et al. (2022) in their survey of higher education teachers also found that technostress negatively influences teachers' online teaching motivation, emphasizing that "the greater the technostress experienced by teachers, the lower their motivation for online teaching."

Vocational college teachers, when facing issues like technological complexity, techno- invasion, techno-overload, and techno-uncertainty, may feel frustrated, anxious, and overwhelmed, which weakens their intrinsic motivation derived from interest and enjoyment. Prasetyo and Purwoto (2024) clearly demonstrated that intrinsic motivation mediates the relationship between work autonomy and innovative work behavior, with intrinsic motivation positively affecting innovative work behavior. Moreover, Khan and Shamsi (2021), although focusing more on "work engagement" than the specific role of "intrinsic motivation," found that work engagement, as a mediating variable, positively influences innovative work behavior. While few studies have explored the mediating role of intrinsic motivation between technostress and innovative work behavior, especially within the specific context of vocational college teachers, this study confirms the mediating role of intrinsic motivation. It clarifies the micro-mechanism through which technostress, by impacting individuals' psychological states, ultimately influences their behavioral outcomes.

However, the empirical results did not support H19e which indicated that intrinsic motivation does not mediate the relationship between role overload and teachers' innovative work behavior, which contrasts with the widely accepted notion in existing literature that intrinsic motivation is a key psychological mechanism driving innovative behavior. For instance, Hur et al. (2016) found that workplace incivility reduces employees' intrinsic motivation through increased emotional exhaustion, which in turn suppresses creativity. This could reflect the complexity and variability of the mechanism in specific contexts. One possible explanation is that the relationship between role overload and intrinsic motivation may not be linear and could be influenced by moderating

factors such as work engagement and organizational support. It was found by Montani et al. that the relationship between work overload and innovative work behavior follows an inverted U-shape, where a certain level of work overload can lead to higher innovation due to increased work engagement rather than intrinsic motivation. In the context of vocational college teachers, they may rely more on a sense of professional responsibility and work engagement to meet work demands, rather than being driven by intrinsic motivation to engage in innovative behaviors.

Furthermore, role overload is a stressor with both challenging and hindering attributes, and its effect on individuals can vary depending on subjective perception. When teachers perceive role overload as a challenge, it may trigger positive motivation and innovation; however, if they view it as a hindrance, it may lead to burnout, emotional exhaustion, and other negative outcomes, thus suppressing innovative tendencies. In the context of this study, vocational college teachers may experience more negative stress due to role conflict and resource scarcity, which weakens the role of intrinsic motivation. Additionally, under high levels of work pressure, intrinsic motivation itself may be insufficiently activated to support sustained innovative work behavior. In contrast, external resources such as increased organizational support, enhancing the meaning and value of work, and boosting work engagement may be more effective in mitigating the negative impact of role overload and promoting innovation. Therefore, while intrinsic motivation is widely regarded as a key mechanism for innovation behavior in existing research, its mediating role may not offer sufficient explanatory power in the context of role overload among vocational college teachers. Future research could explore other potential mediating pathways and moderating mechanisms.

5.1.7 The Effect of Technostress on Role Overload

The results of this study clearly indicated that technostress has a significant positive effect on role overload among vocational college teachers, supporting H20. Specifically, when teachers face higher levels of technostress, their experience of role overload also increases. This finding was consistent with the view that technostress is an emerging work stressor. Abidi et al. (2025) noted that information and communication overload significantly increases the workload of knowledge workers, potentially affecting their innovative work behavior. This suggest that the new demands and challenges posed by technology application indeed translate into an increased sense of task load and blurred

role boundaries. This suggests that teachers, particularly under technostress, are especially susceptible to experiencing role overload.

5.2 Implication to Theories

This study investigates the influencing factors of innovative work behavior among teachers in Chinese higher vocational colleges, and empirically examines the job demands-resources (JD-R) model and the conservation of resources (COR) theory. This section elaborates on the theoretical contributions of the study from the perspectives of the two overarching theoretical frameworks—JD-R and COR—and discusses their broader implications for academia and practice.

5.2.1 Implications to Job Demands-Resources Model

The job demands-resources model, as a dual-path framework for understanding employee work outcomes, provides a solid theoretical foundation for this study. By introducing technostress and role overload as job demands, and resilience, career future time perspective, and innovation climate as job resources, this study systematically tests and extends the JD-R model through the mediating effects of emotional exhaustion and intrinsic motivation.

First, this study robustly confirms the dual-path mechanism of the JD-R model. In the health impairment path, the results clearly support the hypotheses that technostress and role overload significantly and positively predict emotional exhaustion, which in turn significantly and negatively influences innovative work behavior. More importantly, the significant mediating effects of emotional exhaustion are confirmed. These findings clearly illustrate how job demands, by continuously depleting teachers' psychological and emotional resources, ultimately suppress their willingness and behavior to innovate. In the motivational path, the findings also support that resilience, career future time perspective, and innovation climate, as job resources, significantly and positively predict intrinsic motivation, which subsequently facilitates teachers' innovative work behavior. The mediating role of intrinsic motivation is also supported. Collectively, these findings confirm how job resources can stimulate teachers' internal drive, thereby enhancing their innovative engagement through a positive cycle.

Second, this study significantly extends and refines the application boundaries and theoretical content of the JD-R model. By conceptualizing career future time perspective

as a personal resource, this study enriches the understanding of personal resources within the JD-R model. This future-oriented perspective is integrated into the motivational path of the JD-R model. The study reveals how career future time perspective functions as a resource by enhancing intrinsic motivation to promote teachers' innovative work behavior. This provides a new perspective for understanding how individuals cope with work pressure and achieve positive outcomes through a positive outlook toward the future.

Technostress and role overload are identified in this study as direct negative predictors of innovative work behavior. In contrast to some studies that suggest moderate stress may act as a "challenge stressor" and stimulate innovation (Clarke and Higgs, 2020), this study finds that, among teachers in Chinese vocational colleges, these stressors are more often perceived as "hindrance stressors." This is mainly attributed to the steep learning curve, system failures, and additional administrative data-related burdens associated with technological change, along with a lack of adequate support systems and professional autonomy. This contextual variation highlights that within the JD-R model, the same job demands may be perceived differently depending on occupational and cultural contexts, leading to distinct mechanisms of influence.

While validating the JD-R model, this study also reveals boundaries that necessitate revision and deeper understanding, particularly in the context of Chinese vocational college teachers. These unexpected results provide a more nuanced perspective on how job stress and resources affect teachers' motivation and well-being. A notable finding is that role overload does not significantly negatively affect intrinsic motivation (H14 not supported). This contradicted the JD-R model's usual assumption that job demands deplete resources and reduce intrinsic motivation. This unexpected result may stem from the specific professional culture of teachers in Chinese vocational colleges, where individuals may be accustomed to high-intensity, multitasking work environments and perceive overload as a normal part of their career. In this context, teachers may derive a sense of achievement and professional identity from successfully managing complex responsibilities, thereby maintaining their intrinsic motivation. Moreover, some teachers may even interpret heavy workloads as opportunities for personal growth and self-actualization, rather than merely as stressors. This positive cognitive appraisal may mitigate the negative effects of role overload on intrinsic motivation. This finding suggested that the JD-R model should more deeply integrate factors such as individual

cognitive appraisal, cultural context, and occupational characteristics to better explain the mechanism through which job demands influence motivation.

Another challenge lies in the finding that innovation climate does not significantly reduce emotional exhaustion. This contrasts with the JD-R model's typical prediction that job resources alleviate negative outcomes. The findings suggested that the resources provided by innovation climate, such as tolerance for failure and opportunities for communication, do not directly address the core sources of emotional exhaustion for teachers in Chinese vocational colleges. In this context, innovation activities are often focused on teaching methods, curriculum design, or school-enterprise collaboration models, rather than disruptive technological innovations. Teachers may perceive innovation as an integral part of their daily teaching duties, rather than an additional activity requiring significant emotional investment. As a result, the support and space provided by innovation climate may not effectively reduce emotional depletion caused by substantial workloads, pressure from teaching reforms, administrative burdens, or bottlenecks in career development. Emotional exhaustion may be more strongly driven by these fundamental and chronic sources of stress. Furthermore, the impact of innovation climate may be more related to positive activation mechanisms, such as enhancing teachers' sense of professional value, enthusiasm, and achievement motivation, rather than simply reducing negative emotions to lower emotional exhaustion. This finding highlights the need for the JD-R model to more carefully consider the types of resources, contextual specificity, and their associations with different dimensions of health outcomes when explaining the relationship between resources and the health impairment path. Not all positive working conditions can universally alleviate emotional exhaustion.

5.2.2 Implications to Conservation of Resources Theory

The findings of this study provide rich empirical support for conservation of resources theory and extend it within a specific context. Firstly, this study provides contextual evidence for the resource loss spiral. The direct negative effects of technostress and role overload on innovative work behavior (IWB) , as well as their significant positive prediction of emotional exhaustion, are highly consistent with COR theory's "loss dominance principle". When teachers face complex teaching technologies and excessive responsibilities, their cognitive, emotional, and time resources are rapidly consumed. When resource depletion exceeds coping capacity, teachers prioritize routine tasks to

protect remaining resources, reducing investment in resource-intensive innovative activities, thereby inhibiting innovative work behavior and ultimately falling into a "resource loss spiral". This study finds that the context of vocational college teachers, such as rigid institutional structures and persistent role accumulation, makes these stressors more likely to be perceived as threats of resource depletion rather than challenges.

Secondly, this study strengthens the explanatory power of the resource accumulation and resource caravan principles. The direct positive effects of resilience, career future time perspective, and innovation climate on IWB, as well as their positive impact on intrinsic motivation, all support the COR theory's view on how resource accumulation promotes positive outcomes. Teachers with more resources (high resilience, optimistic about career future, and in a supportive innovative environment) are better able to cope with challenges and are more willing to invest in innovation, thus entering a "resource gain spiral". Career future time perspective is confirmed in this study as a key psychological resource that enables teachers to view career development from a long-term perspective, treating current efforts as an investment in future resource accumulation, and thus being more willing to engage in innovation even when facing short-term pressures. This not only extends COR theory's understanding of specific types and mechanisms of personal resources but also provides empirical support for the "resource caravan principle". This principle emphasizes that resources do not function in isolation but are interconnected and mutually reinforcing. For example, a teacher's resilience helps them not give up easily when facing technical problems, while an innovative climate provides technical support and room for trial and error; together, they form a stable "resource caravan" system, synergistically promoting innovation .

However, this study also challenges some universal assumptions of COR theory. Similarly, the non-significant impact of role overload on intrinsic motivation challenges the universality of COR theory, which posits that stressors lead to resource depletion and thus reduced motivation. However, this study found no significant negative effect of role overload on intrinsic motivation, which may imply that, in certain contexts, individuals' cognitive appraisal of job demands may be more complex. Vocational college teachers may perceive overload as part of their professional responsibility, or derive a sense of achievement and professional satisfaction from overcoming challenges, thereby maintaining intrinsic motivation. This ‘cognitive reframing’ allows them to maintain or

even enhance intrinsic motivation, rather than simply entering a resource protection mode. This suggests that COR theory needs to explore the ‘cognitive reframing’ role of individuals concerning resource depletion more deeply, rather than merely focusing on objective resource loss .

Furthermore, the non-significant impact of innovation climate on emotional exhaustion also contradicts the COR theory's expectation that resources can alleviate stress. COR theory posits that resources are essential elements for coping with stress, achieving goals, and maintaining well-being, and that a resource gain spiral can produce long-term positive effects. Therefore, innovation climate, as an organizational resource, should alleviate emotional exhaustion by providing support and helping teachers accumulate resources. However, this study found that the resources provided by an innovation climate (e.g., room for trial and error, opportunities for communication) did not directly act on the most core sources of emotional exhaustion for these teachers, such as heavy teaching loads or administrative burdens. Emotional exhaustion may be seen more as an independent phenomenon driven by deeper work structures or personal factors. This suggests that COR theory, when explaining the impact of organizational resources on negative emotions, needs to differentiate the specific effects of different types of resources on various dimensions of emotional responses, and consider the nature of the primary stressors in the context.

Therefore, this study systematically examined and extended the JD-R model and COR theory by introducing variables such as technostress, role overload, resilience, career future time perspective, and innovation climate within the context of Chinese vocational college teachers. The study not only verified the applicability of these two major theories in this specific occupational and cultural context but also identified some unique roles or unexpected results of key variables in the path relationships. These findings indicate that the influence mechanisms of job demands and resources are not immutable but are affected by occupational culture, individual cognitive appraisal, and the fit between resources and stressors. This study not only enriches the application boundaries and connotations of JD-R and COR theories but also provides an important empirical basis and theoretical enlightenment for a more precise understanding of these theories in diverse contexts in the future.

5.3 Implication to Practitioners

This study provides clear and actionable guidance for a wide range of stakeholders—including institutional leaders in higher vocational college, frontline teachers, policymakers, and professional associations—who seek to enhance innovative work behavior (IWB) among teachers.

To begin with, higher vocational colleges must make the reduction of technostress a central component of their innovation strategies. Technostress not only directly suppresses innovative behavior but also indirectly increases emotional exhaustion and role overload, depleting the cognitive and emotional resources essential for innovation. Colleges should offer tiered, on-demand technical training, deploy dedicated technical support teams, and promote peer-based support networks to reduce technological uncertainty and frustration—particularly during transitions to digital or AI-driven teaching environments. One actionable option would be to establish a digital ease and innovation lab, and a digital support response team to provide rapid troubleshooting when teachers encounter technological problems in teaching and instructional design. In addition, colleges could organize monthly technology sandbox workshops, in which teachers are encouraged to experiment with new digital tools without performance evaluation or formal assessment pressure. This can be further supported through peer-led micro-training sessions, allowing digitally competent faculty members to share practical knowledge with colleagues in a collegial and low-threat setting. Additionally, setting clear expectations for the use of educational technology and maintaining boundaries between work and personal life can prevent technology-related stress from spilling over, thereby conserving teachers' psychological energy for meaningful innovation.

Addressing role overload is equally important to restore teachers' capacity for innovative engagement. The findings show that excessive demands across administrative, instructional, research, and industry-collaboration responsibilities significantly increase emotional exhaustion and reduce teachers' ability to innovate. Colleges should conduct systematic audits of work tasks to eliminate repetitive, low-value duties and restructure workload distribution to ensure a fair balance between teaching and non-teaching responsibilities. In contexts that emphasize school-industry collaboration, institutions must assess the resource demands placed on teachers and provide compensatory support to prevent external engagements from becoming hidden sources of stress. Granting

teachers more autonomy and flexibility in managing their tasks will enable them to preserve cognitive space for creative thinking and experimentation. A more concrete intervention would be the implementation of a workload rebalancing and cognitive space initiative. Such an initiative could begin with an annual task audit review aimed at identifying redundant administrative duties, repeated reporting requirements, and low-value procedural tasks that can be simplified or removed. Another especially valuable strategy would be to introduce innovation sabbatical weeks or other forms of protected creative time, during which teachers can focus specifically on course redesign, industry-oriented pedagogical experimentation, or interdisciplinary collaboration.

At the individual level, enhancing teachers' psychological resources, particularly resilience and career future time perspective, is essential for sustaining innovation over time. Resilience acts as an internal buffer against resource loss, helping teachers remain emotionally stable and committed in the face of stress and uncertainty. Colleges are advised to integrate structured resilience-building programs into professional development, including workshops on cognitive reframing, emotion regulation, and adaptive recovery from failure. To achieve this, colleges could establish a resilience and adaptive leadership bootcamp. This may include psychological capital development training, scenario-based adaptive teaching simulations, emotional regulation coaching sessions, and failure-sharing innovation forums in which teachers discuss unsuccessful innovation attempts and the lessons derived from them.

Career future time perspective helps teachers align present tasks with long-term professional goals, fostering purposeful innovation. This can be supported through personalized career counseling, the visualization of career pathways, and promotion systems that clearly link innovative contributions to career advancement. In this respect, a career vision accelerator program could be developed to strengthen teacher' awareness of future-oriented career opportunities. This program may include structured career planning workshops, the creation of long-term innovation-based promotion pathways, mentorship matching with industry experts, and the development of five-year innovation career roadmaps for faculty members. The practical significance of such measures is that they can reframe innovation from an additional burden into a meaningful investment in future growth.

From an organizational standpoint, cultivating a supportive innovation climate is a critical driver of teacher innovation. The study finds that a climate conducive to innovation not only promotes innovative behavior directly but also enhances intrinsic motivation, which acts as a mediating force. Accordingly, higher vocational colleges should create institutional conditions that normalize experimentation, tolerate failure, and reward proactive teaching practices. This could include establishing teaching innovation grants, interdisciplinary collaboration labs, and low-risk pilot platforms for pedagogical experimentation. One useful approach would be to adopt an intrinsic motivation cultivation framework within departments. This may involve autonomy-based teaching reform, innovation idea incubator meetings, and a peer recognition system for creative experimentation. These mechanisms are valuable because intrinsic motivation is strengthened when teachers feel they have discretion in how they teach, when their ideas are seriously discussed, and when even small-scale experimentation is appreciated by colleagues.

Higher vocational colleges should adopt a dual-path strategy that simultaneously prevents emotional exhaustion and stimulates intrinsic motivation. Emotional risk can be addressed through proactive measures such as mental health screening, confidential counseling, and flexible workload policies. At the same time, intrinsic motivation should be cultivated by embedding meaning, autonomy, and opportunities for competence-building into teaching and research processes. Strategies such as growth-oriented feedback, process-based performance evaluation, and task variety can help sustain motivation even under increasing job demands.

Teachers themselves should also be encouraged to develop self-awareness around resource management and actively engage with institutional support systems. Monitoring personal levels of technostress and workload, participating in resilience and career planning programs, and aligning present tasks with long-term aspirations are key strategies. By leveraging institutional platforms such as interdisciplinary research groups, curriculum reform pilots, and professional exchange forums, teachers can co-develop innovation capacity while broadening their professional influence.

At the policy level, education policymakers should reduce non-instructional burdens on teachers, introduce targeted innovation grants, and align policy frameworks with the innovation needs of industry. Psychological adaptation programs should also be

institutionalized to help teachers navigate the fast-changing technological landscape in higher vocational education, enhancing their adaptability and long-term innovation potential.

Professional associations should act as integrators of innovation and representatives of teacher interests. They can provide standardized technical training, offer modular innovation workshops, and establish cross-institutional collaboration networks. At the same time, they should advocate for the reduction of role overload and promote the inclusion of intrinsic motivation as a core indicator in professional development frameworks.

The enhancement of innovative work behavior among teachers in vocational education requires coordinated efforts across individual, institutional, and systemic levels. Only by reducing resource depletion and amplifying the mobilization of resources can higher vocational colleges build a sustainable ecosystem of innovation—transforming teachers from task executors into strategic innovators.

5.4 Limitation of the Study and Implications of Future Research

While the present study offers a theoretically grounded and empirically validated model of innovative work behavior among higher vocational college teachers in China, several limitations should be noted, each of which opens promising directions for future inquiry.

5.4.1 Limitations of the Study

While this study provides a theoretically grounded and empirically supported model of innovative work behavior among higher vocational college teachers in China, several limitations should be acknowledged. First, the sample was geographically concentrated in Heilongjiang Province. The socio-economic context, education system, and policy environment of this region may differ from other regions or national settings, limiting the generalizability of the findings.

Second, the use of a cross-sectional research design and self-report questionnaires presents common methodological challenges. Since data were collected at a single point in time, it is difficult to determine causal relationships between variables or track how they change over time. Additionally, the cross-sectional design cannot assess temporal dynamics implied by COR loss or gain spirals. Thus, this study interpret the results as

associations consistent with resource loss or gain processes rather than evidence of spirals. Furthermore, variables like emotional exhaustion and intrinsic motivation are sensitive to daily experiences and personal states. Capturing them through self-assessments may introduce bias, even though measures were taken to reduce such risks—such as anonymity and standard procedures to test for common method bias. Nevertheless, the possibility of subjective reporting errors cannot be entirely ruled out.

Third, the theoretical model, while based on well-established frameworks such as the JD-R model and COR theory, still simplifies complex psychological and organizational processes. Important variables, such as leadership support, job autonomy, digital competence, technology self-efficacy, and performance feedback, were not included in the model, nor were personal traits like self-efficacy, value alignment, or personality traits. These omissions may limit the explanatory power and validity of the model.

5.4.2 Implications of Future Research

In response to these limitations, several suggestions are offered for future research. Firstly, building on these limitations, several directions are proposed for future research. First, future studies should aim to broaden the contextual and educational scope by including samples from diverse provinces, economic regions, and institutional types across China, as well as from international settings. Such comparative research could test the robustness of the proposed mechanisms across different cultural, policy, and organizational environments (Filatotchev, 2022). Moreover, extending the inquiry to teachers in other education sectors—such as primary, secondary, or general higher education—may reveal whether innovation-related processes operate similarly across institutional boundaries.

Second, future research should adopt longitudinal designs to explore causal sequences and the temporal evolution of key constructs (Vogl, 2023). In addition, mixed-methods approaches—such as combining quantitative surveys with interviews, focus groups, or case studies—would enrich the explanatory depth by capturing teachers' subjective experiences, cognitive evaluations, and behavioral strategies, especially in relation to non-significant or unexpected findings.

Third, future studies should consider adopting multi-source data collection to improve objectivity and validity (Polas, 2025). Combining self-reports with manager evaluations, peer assessments, or actual teaching performance indicators would help

construct a more comprehensive and accurate measure of innovative work behavior. For psychological constructs such as motivation and exhaustion, methods like daily diary studies or experience sampling can offer greater temporal resolution and ecological validity.

Fourth, future studies could improve the theoretical model by including other factors that might influence or change the relationships found. For example, leadership style, job satisfaction, individual personality traits, or the availability of resources may help explain when and why job stress influences innovation. Future research could investigate whether low, moderate, and high levels of job demands generate differential effects on workplace behaviors, as well as whether such effects are nonlinear, threshold-based, or interactive in nature.

5.5 Conclusion

This study integrates the JD-R model and COR theory to construct a theoretical model incorporating key variables such as technostress, role overload, resilience, career future time perspective, innovation climate, emotional exhaustion, intrinsic motivation and innovative work behavior. Using quantitative methods, this study systematically examines the innovative work behavior of higher vocational college teachers in China. The model demonstrates good fit, with most hypotheses supported, and the validation results exhibit strong explanatory power.

Compared with existing research, this study presents several notable innovations: this study introduces career future time perspective as a personal resource variable and validate its role in positively predicting innovative work behavior by enhancing intrinsic motivation and mitigating emotional exhaustion. Additionally, this study systematically integrates the dual mediating mechanisms of emotional exhaustion and intrinsic motivation, revealing the interactive mechanisms of resource depletion and motivation pathways in the formation of teachers' innovative work behavior. Furthermore, the findings demonstrate that technostress and role overload function as hindrance stressors that significantly undermine innovative work behavior among teachers in higher vocational colleges.

Therefore, this study empirically tests and extends the JD-R and COR theories in the context of higher vocational education, clarifies the mechanisms and mediating paths

of key variables, enriches theoretical understanding, and provides empirical evidence and practical strategies for promoting teachers' innovative work behavior under high-pressure educational environments. Future research may introduce longitudinal data, multi-source data, and contextual moderating variables to further expand the model's applicability and explanatory depth.



BIBLIOGRAPHY

Abdou, A. H. et al. Work stress, work–family conflict, and psychological distress among resort employees: A JD-R model and spillover theory perspectives. *Frontiers in Psychology*, 2024;15, 1326181. https://doi.org/10.3389/fpsyg.2024.1326181.

Abidi, O., Safi, M., Sarhan, H., & Bhagat, R. (2025). Creative self-efficacy and innovative behaviour amidst the digital deluge: Unravelling their nexus with autonomy and workplace civility. *International Journal of Productivity and Performance Management*, 74(8), 2883–2907. https://doi.org/10.1108/IJPPM-05-2024-0319.

Abubakar, A. M., Foroutan, T., & Megdadi, K. J. (2019). An integrative review: High-performance work systems, psychological capital and future time perspective. *International Journal of Organizational Analysis*, 27(4), 1093-1110. https://doi.org/10.1108/IJOA-12-2017-1302.

Adams, R. M. (2021). What Is, and what is in Itself: A Systematic Ontology. Oxford University Press.

Afsar, B., & Umrani, W. A. (2020). Transformational leadership and innovative work behavior: The role of motivation to learn, task complexity and innovation climate. *European Journal of Innovation Management*, 23(3), 402–428. https://doi.org/10.1108/EJIM-12-2018-0257.

Afsar, B., Al-Ghazali, B. M., Cheema, S., & Javed, F. (2021). Cultural intelligence and innovative work behavior: The role of work engagement and interpersonal trust. *European Journal of Innovation Managemen*t, 24(4), 1082–1109. https://doi.org/10.1108/EJIM-01-2020-0008.

Aguinis, H., Ramani, R. S., & Alabduljader, N. (2018). Best-practice recommendations for producers, evaluators, and users of methodological literature reviews. *Organizational Research Methods*, 21(1), 19-32. https://doi.org/10.1177/1094428117706402.

Ahmad Nizam, S. N. E. S., Mohamad Saber, J., Salim, A., Zaidi, N. A., & Bahari, K. A. (2024). Examining the impact of job demand resource theory variables on burnout among hotel employees in Kuala Lumpur. *Journal of Tourism, Hospitality and Culinary Arts*, 16(1), 489-513. https://ir.uitm.edu.my/id/eprint/97776/.

Ahmad, N., Alias, F. A., Hamat, M., & Mohamed, S. A. (2024). Reliability analysis: Application of Cronbach's alpha in research instruments. In Pioneering the future: Delving into e-learning's landscape [E-book] (Vol. 8, pp. 114–119). Universiti Teknologi MARA Cawangan Pulau Pinang. https://appspenang.uitm.edu.my/sigcs/.

Ahmad, S., Lensink, R., & Mueller, A. (2022). Boosting survey response rates by announcing undefined lottery prizes in invitation email subject lines: Evidence from a global randomized controlled trial. *Survey Research Methods*, 16(2), 165–206. https://doi.org/10.18148/srm/2022.v16i2.7651.

Ahmad, Z., Khalid, F., Aljanabi, H. M., Alshahrani, M. M. R., Jahlan, I., Bakariman, S. S., Kehlini, M. A., Aljanabi, A. M., & Shahbal, S. (2024). Occupational stress, job performance and role overload among nurses working in the healthcare sector: A mediational model. *Kurdish Studies*, 12(1), 2883–2894. https://doi.org/10.58262/ks.v12i1.206.

Ahmadin, M. (2022). Social research methods: Qualitative and quantitative approaches. *Journal of Social and Cultural Studies*, 6(1), 104–113. https://ejournal.tebarscience.com/index.php/JKSB/article/view/103.

Akar, N., Yörük, T., Subaşı, K., & Valeri, M. (2024). The individual, organizational and social contexts of teleworking and technostress during COVID-19 pandemic: A holistic analysis based on JD-R model. *Journal of Mehmet Akif Ersoy University Economics and Administrative Sciences Faculty*, 11(3), 1074–1094. https://doi.org/10.30798/makuiibf.1443319.

Aldabbas, H., Pinnington, A. H., & Lahrech, A. (2022). Encouraging more creativity in organizations: The importance of employees' intrinsic motivation and work engagement. *Journal of Organizational Effectiveness: People and Performance*, 9(2), 2337. https://doi.org/10.1108/IJOA-11-2021-3038.

Aldabbas, H., Pinnington, A., Lahrech, A., & Blaique, L. (2025). Extrinsic rewards for employee creativity? The role of perceived organisational support, work engagement, and intrinsic motivation. *International Journal of Innovation Science*, 17(2), 237–260. https://doi.org/10.1108/IJIS 08 2022 0165.

Alenezi, M. (2023). Digital learning and digital institution in higher education. *Education Sciences*, 13(1), 88. https://doi.org/10.3390/educsci13010088.

AlEssa, H. S., & Durugbo, C. M. (2022). Systematic review of innovative work behavior concepts and contributions. *Management Review Quarterly*, 72(4), 1171–1208. https://doi.org/10.1007/s11301 021 00224 x.

AlGerafi, M. A. M., Zhou, Y., Ouibibi, M., & Wijaya, T. T. (2023). Unlocking the potential: A comprehensive evaluation of augmented reality and virtual reality in education. *Electronics*, 12(18), Article 3953. https://doi.org/10.3390/electronics 12183953.

Ali, A., Abbas, S. F., Khattak, M. S., Arfeen, M. I., Chaudhary, M. A. I., & Yousaf, L. (2022). Mediating role of employees' intrinsic motivation and psychological safety in the relationship between abusive supervision and innovative work behavior: An empirical test in IT sector of Pakistan. *Cogent Business & Management*, 9(1). https://doi.org/10.1080/23311975.2022.2039087.

Ali, F., Nisar, Q. A., & Nasir, S. (2023). Do emotions matter in digitized workplace? Technostress and employees' emotional well-being during the pandemic. *Kybernetes*, 52(12), 6122–6143. https://doi.org/10.1108/K-10-2021-1000.

Ali, I. M. (2024). A guide for positivist research paradigm: From philosophy to methodology. *Idealogy Journal*, 9(2). https://doi.org/10.24191/idealogy.v9i2.596.

Alizadeh Kaghazchi, K., & Atan, T. (2025). Reflection of innovative climate on corporate social responsibility, mediating role of individual creativity. *Sustainability*, 17(14), 6565. https://doi.org/10.3390/su17146565.

Almessabi, A. (2025). The role of principals' leadership behaviors in stimulating teachers' innovative work behavior: A correlational study. *Educational Administration: Theory and Practice*, 31(1), 686–706. https://doi.org/10.53555/kuey.v31i1.9882.

Alonso, R. K., Velez, A., Diego Mantecón, M. Á., & Heredia Oliva, E. (2025). Blended learning in higher education for the development of intrinsic motivation: A systematic review. *Cogent Education*, 12(1), 2487572. https://doi.org/10.1080/ 2331186X.2025.2487572.

Alshahrani, M. A., Yaqub, M. Z., Ali, M., El Hakimi, I., & Salam, M. A. Could entrepreneurial leadership promote employees' innovative work behavior? The roles of intrinsic motivation, creative self-efficacy and firms' innovation climate. *International Journal of Innovation Science*, 2025. doi:10.1108/IJIS-08-2024-0211.

Alvarez-Risco, A., Del-Aguila-Arcentales, S., Yáñez, J. A., Rosen, M. A., & Mejia, C. R. (2021). Influence of technostress on academic performance of university medicine students in Peru during the COVID-19 pandemic. *Sustainability*, 13(16), 8949. https://doi.org/10.3390/su1316894.

Alyamy, K. F., & Cheong, L. S. (2020). Role ambiguity, conflict and overload as predictors of emotional exhaustion: The mediation effect of teaching satisfaction and affective commitment. *International Journal of Education, Psychology and Counseling*, 5(36), 37–55. https://doi.org/10.35631/IJEPC.536004.

Amabile, T. M. (1988). A model of creativity and innovation in organizations. *Research in Organizational Behavior*, 10, 123–167. https://doi.org/10.1016/S0191-3085 (08)60128-3.

American Psychological Association (2017). Ethical principles of psychologists and code of conduct (2002, amended effective January 1, 2017). https://www.apa.org/ethics/ code.

Andre, L., Van Vianen, A. E., Peetsma, T. T., & Oort, F. J. (2018). Motivational power of future time perspective: Meta-analyses in education, work, and health. *PLOS ONE*, 13(1), e0190492. https://doi.org/10.1371/journal.pone.0190492.

Anzarwati, E. (2021). The influence of transformational leadership, distributive justice, and intrinsic motivation on innovative work behaviour. *Journal of Community Empowerment*, 2(2). https://doi.org/10.55314/jcoment.v2i2.241.

Apenteng, B. A., Boakye, K. G., & Opoku, S. T. (2022). A moderated moderation analysis of perceived adaptivity and organizational support for innovation in the relationship between role overload and emotional exhaustion. *Health Care Management Review*, 47(3), 245–253. https://doi.org/10.1097/HMR.0000000000 000328.

Arini, D. U., Hardani, & Rusmalia. (2024). Factor analysis of innovative work behavior in IT employees with millennial generation characteristics. *Journal of Syntax Literate*, 9(11), 6739–6751. https://doi.org/10.36418/syntax-literate.v9i11.50116.

Aslam, M. Z., Fateh, A., Omar, S., & Nazri, M. (2022). The role of initiative climate as a resource caravan passageway in developing proactive service performance. *Asia-Pacific Journal of Business Administration*, 14(4), 691–705. https://doi.org/10. 1108/APJBA-09-2021-0454.

Awan, K., & Ahmad, G. (2024). Organizational climate and innovative work behaviour: The mediating role of workload and teaching motivation. *Pakistan Journal of Psychological Research*, 39(4), 723–746. https://doi.org/10.33824/PJPR.2024.39.4.39.

Axelrad, H., Drizin, R., Malul, M., & Rosenboim, M. (2022). Does future time perspective predict motivation to learn? *International Journal of School & Educational Psychology*, 10(1), 94–104. https://doi.org/10.1080/21683603.2020.1813667.

Ayoub, A. E. A. H., Almahamid, S. M., & Al Salah, L. F. (2023). Innovative work behavior scale: Development and validation of psychometric properties in higher education in the GCC countries. *European Journal of Innovation Management*, 26(1), 119–133. https://doi.org/10.1108/EJIM-04-2021-0176.

Baatz, J., & Wirzberger, M. (2025). Resilience as a professional competence: A new way towards healthy teachers? *Social Psychology of Education*, 28(56). https://doi.org/10.1007/s11218-024-10010-8.

Bail, C., Harth, V., & Mache, S. (2023). Digitalization in urology—A multimethod study of the relationships between physicians' technostress, burnout, work engagement and job satisfaction. *Healthcare*, 11(11), 2255. https://doi.org/10.3390/healthcare11112255.

Bailey, D. (2022). Emerging technologies at work: Policy ideas to address negative consequences for work, workers, and society. *ILR Review*, 75(3), 527–551. https://doi.org/10.1177/00197939221076747.

Baird, H. M., Webb, T. L., Sirois, F. M., & Gibson-Miller, J. (2021). Understanding the effects of time perspective: A meta-analysis testing a self-regulatory framework. *Psychological Bulletin*, 147(3), 233–264. https://doi.org/10.1037/bul0000308.

Bajec, B. (2018). Relationship between time perspective and job satisfaction. *International Journal of Human Resources Development and Management*, 18(1), 145–165. https://doi.org/10.1504/IJHRDM.2018.10013654.

Bakker, A. B., & de Vries, J. D. (2021). Job demands–resources theory and self-regulation: New explanations and remedies for job burnout. *Anxiety, Stress, & Coping*, 34(1), 1-21. https://doi.org/10.1080/10615806.2020.1797695.

Bakker, A. B., Demerouti, E., & Sanz-Vergel, A. (2023). Job demands–resources theory: Ten years later. *Annual Review of Organizational Psychology and Organizational Behavior*, 10(1), 25–53. https://doi.org/10.1146/annurev-orgpsych-120920-053933.

Bakker, A. B., Demerouti, E., & Sanz-Vergel, A. I. (2014). Burnout and work engagement: The JD–R approach. *Annual Review of Organizational Psychology and Organizational Behavior*, 1(1), 389–411. https://doi.org/10.1146/annurev-orgpsych-031413-091235.

Bakker, A. B., Petrou, P., Op den Kamp, E. M., & Tims, M. (2020). Proactive vitality management, work engagement, and creativity: The role of goal orientation. *Applied Psychology*, 69(2), 351–378. https://doi.org/10.1111/apps.12210.

Ballangan, M. G., Carantes, F. T., & Yanes, P. S. Jr. (2024). Unpacking technostress: A systematic review on its effects and mitigation. *Cognizance Journal of Multidisciplinary Studies*, 4(4), 11–21. https://doi.org/10.47760/cognizance.2024.v04i04.002.

Bani-Melhem, S., Quratulain, S., & Al-Hawari, M. A. (2021). Does employee resilience exacerbate the effects of abusive supervision? A study of frontline employees' self-esteem, turnover intention, and innovative work behaviors. *Journal of Hospitality Marketing & Management*, 30(5), 611–629. https://doi.org/10.1080/19368623.2021.1902422.

Bao, X. (2021). The impact of role overload on the health of college teachers: Evidence from China. *Journal of Modern Education Studies*, 37(2), 45–52. https://doi.org/10.29259/jmes.37.2.45-52.

Bardoel, E. A., & Drago, R. (2021). Acceptance and strategic resilience: An application of conservation of resources theory. *Group & Organization Management*, 46(4), 657–691. https://doi.org/10.1177/10596011211002847.

Baruani, T. H., Li, X., & Binghai, S. (2021). Teachers' resilience against stress: A review on ways and its impacts towards the teaching profession. *Asian Journal of Education and Social Studies*, 20(4), 28–41. https://doi.org/10.9734/ajess/2021/v20i430310.

Bawuro, F. A., Shamsuddin, A., Wahab, E., & Usman, H. (2019). Mediating role of meaningful work in the relationship between intrinsic motivation and innovative work behaviour. *International Journal of Scientific & Technology Research*, 8(9), 2277–8616.

Bayram Yilmaz, & Tore, E. (2025, February 12). The mediating role of self efficacy in the effect of school principals' transformational leadership characteristics on teachers' innovative work behavior. *Leadership and Policy in Schools*. https://doi.org/10.1080/15700763.2025.2462741

Beer, P., & Mulder, R. H. (2020). The effects of technological developments on work and their implications for continuous vocational education and training: A systematic review. *Frontiers in Psychology*, 11. https://doi.org/10.3389/fpsyg.2020.00918.

Benk, O., & Kenek, G. (2022). The effect of organizational justice on emotional exhaustion: The case of health employees. *Yönetim Bilimleri Dergisi/Journal of Administrative Sciences*, 22(53), 992–1016. https://doi.org/10.35408/comuybd.1406939.

Bentler, P. M. (1990). Comparative fit indexes in structural models. *Psychological Bulletin*, 107(2), 238–246. https://doi.org/10.1037/0033-2909.107.2.238.

Bentler, P. M., & Bonett, D. G. (1980). Significance tests and goodness of fit in the analysis of covariance structures. *Psychological Bulletin*, 88(3), 588–606. https://doi.org/10.1037/0033-2909.88.3.588.

Bergeman, C. S., & Nelson, N. A. (2024). Building a dynamic adaptational process theory of resilience (ADAPTOR): Stress exposure, reserve capacity, adaptation, and consequence. *American Psychologist*, 79(8), 1063–1075. https://doi.org/10.1037/amp0001280.

Bickerton, G. R., & Miner, M. (2023). Conservation of resources theory and spirituality at work: When a resource is not always a resource. *Psychology of Religion and Spirituality*, 15(2), 241–252. https://doi.org/10.1037/rel0000536.

Bidi, S. B., Bhat, V., Chandra, S. R., Dmello, V. J., Weesie, E., & Gil, M. T. (2024). Decoding occupational well-being of teachers: Does psychological capital and coping mechanism impact perceived stress? *Work, Industrial & Organizational Psychology*. https://doi.org/10.1080/23311908.2024.2409505.

Birdi, K., Leach, D., & Magadley, W. (2016). The relationship of individual capabilities and environmental support with different facets of designers' innovative work behavior. *Journal of Product Innovation Management*, 33(1), 19–35. https://doi.org/10.1111/jpim.12250.

Bollen, K. A. (1989). Structural equations with latent variables. Wiley.

Bonanno, G. A., Chen, S., Bagrodia, R., & Galatzer Levy, I. R. (2024). Resilience and disaster: Flexible adaptation in the face of uncertain threat. *Annual Review of Psychology*, 75(1), 573–599. https://doi.org/10.1146/annurev psych 011123 024224.

Borst, R. T. (2022). Stressed versus motivated public employees: A systematic review of the motivation and stress literatures through a contextualized job demands-resources model. In Research handbook on motivation in public administration (pp. 354–376).

Bos-Nehles, A., Renkema, M., & Janssen, M. (2017). HRM and innovative work behaviour: A systematic literature review. *Personnel Review*, 46(7), 1228–1253. https://doi.org/10.1108/PR-09-2016-0257.

Bourlakis, M., Nisar, T. M., & Prabhakar, G. (2023). How technostress may affect employee performance in educational work environments. *Technological Forecasting and Social Change*, 193, Article 122674. https://doi.org/10.1016/j.techfore.2023.122674.

Boyer Davis, S., & Berry, K. (2022). Technostress creators in higher education during the COVID 19 pandemic: A comparison of faculty perceptions and experiences. *Journal of Higher Education Theory and Practice*, 22(10). https://doi.org/10.33423/jhetp.v22i10.5383.

Boyer-Davis, S., Berry, K., & Cooper (2023), A.The effect of technostress on the motivation to teach online in higher education before and during the COVID-19 pandemic: Perceptions of business faculty. *International Journal for Business Education*, 165(1), Article 5. doi:10.30707/IJBE165.1.1690384197.882912.

Brod, C. (1984). Technostress: The human cost of the computer revolution. *Addison Wesley Publishing Company*.

Brown, S. (2015). Resilience at work: How to succeed no matter what life throws at you. *American Psychological Association*.

Browne, M. W., & Cudeck, R. (1993). Alternative ways of assessing model fit. In K. A. Bollen & J. S. Long (Eds.), Testing structural equation models (pp. 136–162). Sage Publications.

Brühl, V. (2024). The economic rise of China: An integrated analysis of China's growth drivers (No. 720). *CFS Working Paper Series*. Available at https://www.ifw-kiel.de/publications/cfs-working-paper-series/wp-series/detail/the-economic-rise-of-china-an-integrated-analysis-of-chinas-growth-drivers-720/.

Brunetto, Y., Kominis, G., & Ashton Sayers, J. (2024). Authentic leadership, psychological capital, acceptance of change, and innovative work behaviour in non profit organisations. *Australian Journal of Public Administration*, 83(1), 69–87. https:// doi.org/10.1111/1467 8500.12412.

Buchanan, I. (2018). A dictionary of critical theory. Oxford University Press.

Buenadicha-Mateos, M., Sánchez-Hernández, M. I., & González-López, Ó. R. (2022). Analysis of the emotional exhaustion derived from techno-stress in the next generation of qualified employees. *Frontiers in Psychology*, 13, 792606. https:// doi.org/10.3389/fpsyg.2022.792606.

Bühler, M. M., Jelinek, T., & Nübel, K. (2022). Training and preparing tomorrow's workforce for the Fourth Industrial Revolution. *Education Sciences*, 12(11), 782. https://doi.org/10.3390/educsci12110782.

Buijs, R. (2022). The impact of organizational innovation support, employee intrinsic motivation and big five personality traits on employee innovative work behavior. *Journal of Business Research*, 12(3), 295-303.

Burns, M., Bally, J., Burles, M., Holtslander, L., & Peacock, S. (2022). Constructivist grounded theory or interpretive phenomenology? Methodological choices within specific study contexts. *International Journal of Qualitative Methods*, 21, 160940 69221077758.

Cai, M., Wang, M., & Cheng, J. (2024). The effect of servant leadership on work engagement: The role of employee resilience and organizational support. *Behavioral Sciences*, 14(4), 300. https://doi.org/10.3390/bs14040300.

Cai, Y. (2024). The role of the school innovative climate in the relationship between proactive personality and creative behavior among students from Chinese normal colleges. *Humanities and Social Sciences Communications*, 11, Article 1662. https://doi.org/10.1057/s41599 024 04212 w.

Cai, Y., & Tang, R. (2021). School support for teacher innovation: Mediating effects of teacher self efficacy and moderating effects of trust. *Thinking Skills and Creativity*, 41, Article 100854. https://doi.org/10.1016/j.tsc.2021.100854.

Califf, C. B., & Brooks, S. (2020). An empirical study of techno-stressors, literacy facilitation, burnout, and turnover intention as experienced by K-12 teachers. *Computers & Education*, 157, Article 103971. https://doi.org/10.1016/j.compedu. 2020.103971.

Callista, F., & Hastuti, R. (2023). Relationship of role stress, technostress, and performance at high school teachers in West Jakarta. *Journal of Communication in Scientific Inquiry (JCSI)*, 5(2), 107–117. https://doi.org/10.58915/jcsi.v5i2.1097.

Campbell, S., Greenwood, M., Prior, S., Shearer, T., Walkem, K., Young, S., Bywaters, D., & Walker, K. (2020). Purposive sampling: Complex or simple? *Research Methods in Medicine & Health Sciences*, 1(2), 65–72. https://doi.org/10.1177/ 2632084320929586.

Campbell-Sills, L., & Stein, M. B. (2007). Psychometric analysis and refinement of the Connor–Davidson Resilience Scale (CD-RISC): Validation of a 10-item measure of resilience. *Journal of Traumatic Stress*, 20(6), 1019–1028. https://doi.org/10.10 02/jts.20271.

Caniëls, M. C. J., Hatak, I., Kuijpers, K. J. C., & de Weerd-Nederhof, P. C. (2022). Trait resilience instigates innovative behaviour at work? A cross-lagged study. *Creativity and Innovation Management*, 31(1), https://doi.org/10.1111/caim.12 486.

Cao, C., Shang, L., & Meng, Q. (2020). Applying the job demands-resources model to exploring predictors of innovative teaching among university teachers. *Teaching and Teacher Education*, 89, 103009. https://doi.org/10.1016/j.tate.2019.103009.

Cao, M., Zhao, S., Ma, Y., & Lv, H. (2024). Breaking the negative cycle of age and proactive behavior: The role of job variety and future time perspective. *Asia Pacific Journal of Human Resources*, 62(3), e12410. https://doi.org/10.1111/1744-7941.12410.

Carpenter, T. P., & Law, K. C. (2021). Optimizing the scientific study of suicide with open and transparent research practices. *Suicide and Life-Threatening Behavior*, 51(1), 36-46. https://doi.org/10.1111/sltb.12625.

Carstensen, L. L. (2021). Socioemotional selectivity theory: The role of perceived endings in human motivation. *The Gerontologist*, 61(8), 1188-1196. https://doi.org/10.1093/geront/gnab074.

Catanzano, T., Deitte, L. A., Naeger, D. M., Morgan, D. E., Germaine, P., & Slanetz, P. J. (2022). Meeting faculty development needs: Review of current resources and opportunities for program development. *Academic Radiology*, 29(7), 1116–1123. https://doi.org/10.1016/j.acra.2021.08.021.

Chaaban, Y., Alkhateeb, H., Abu-Tineh, A., & Romanowski, M. (2023). Exploring teachers' perspectives on career development: Q methodology research. *Teaching and Teacher Education*, 122, 103987. https://doi.org/10.1016/j.tate.2022.103987.

Chandra, S., Shirish, A., & Srivastava, S. C. (2019). Does technostress inhibit employee innovation? Examining the linear and curvilinear influence of technostress creators. *Communications of the Association for Information Systems*, 44(1), Article 19, 299–331. https://doi.org/10.17705/1CAIS.04419.

Chang, P.-C., Zhang, W., Cai, Q., & Guo, H. (2024). Does AI-driven technostress promote or hinder employees' artificial intelligence adoption intention? A moderated mediation model of affective reactions and technical self-efficacy. *Psychology Research and Behavior Management*, 17, 413–427. https://doi.org/10.2147/PRBM.S441444.

Charmaz, K. (2017). Constructing grounded theory (2nd ed.). Sage Publications.

Chen, C. H., Cheng, J. M., & Lin, C. T. (2016). Exploring the relationship between innovation-oriented organizational culture and innovative work behavior: The moderating effect of employees' learning orientation. *Journal of Business Research*, 69(7), 2487–2494. https://doi.org/10.1016/j.jbusres.2016.02.019.

Chen, C., & Pongtornkulpanich, A. (2024). Motivation, knowledge sharing, and innovative work behaviors of university teachers. *Journal of System and Management Sciences*, 14(4), 86–104. https://doi.org/10.33168/JSMS.2024.0406.

Chen, G., Wang, J., Huang, Q., Sang, L., Yan, J., Chen, R., Cheng, J., Wang, L., Zhang, D., & Ding, H. (2024). Social support, psychological capital, multidimensional job burnout, and turnover intention of primary medical staff: A path analysis drawing on conservation of resources theory. *Human Resources for Health*, 22(1), 42. https://doi.org/10.1186/s12960-024-00915-y.

Chen, J., Leung, W. S., & Evans, K. P. (2016). Are employee-friendly workplaces conducive to innovation? *Journal of Corporate Finance*, 40, 61–79. https://doi.org/10.1016/j.jcorpfin.2016.07.002.

Chen, L., & Du, Y. (2023). The impact of role overload on job crafting from the perspective of construal level theory. *Personnel Review*, 52(8), 1957–1974. https://doi.org/10.1108/PR-03-2021-0179.

Chen, L., Li, M., & Zhao, Q. (2021). Challenges and influencing factors of teacher innovation in vocational education in China's resource-based regions. *Journal of Vocational Education Research*, 18(3), 77-92. https://doi.org/10.53555/kuey.v30i5.4222.

Chen, Q., & Li, Z. (2024). Exploring the impact of workload variation on job burnout among teachers in higher vocational colleges: A job demand resource theory perspective. *Educational Administration: Theory and Practice*, 30(5), 7678-7685. https://doi.org/10.53555/kuey.v30i5.4222.

Chen, S. (2024). Intrinsic motivation and innovative teaching practices among teachers in Beijing colleges and universities. *Uniglobal Journal of Social Sciences and Humanities*, 3(2), 37–47. https://doi.org/10.53797/ujssh.v3i2.5.2024.

Chen, T., Kim, T.-Y., Gong, Y., & Liang, Y. (2024). Competence drives interest or vice versa? Untangling the bidirectional relationships between creative self-efficacy and intrinsic motivation for creativity in shaping employee creativity. *Journal of Management Studies*, 0(0), 1–xx. https://doi.org/10.1111/joms.13072.

Chen, W. J. (2021). An Investigation Of Job Burnout And Motivation Factors In China Higher Vocational College (Doctoral dissertation, UTAR).

Chen, X., Huang, Z., & Lin, W. (2022). The effect of emotion regulation on happiness and resilience of university students: The chain mediating role of learning motivation and target positioning. *Frontiers in Psychology*, 13, Article 1029655. https://doi.org/10.3389/fpsyg.2022.1029655.

Chen, Y., & Yin, Y. (2017, May). Research on Mechanism of Innovation Climate in College on College Student's innovative work behavior The Mediating Effects of Intrinsic Incentives. In 3rd International Conference on Arts, Design and Contemporary Education (ICADCE 2017) (pp. 914-917). Atlantis Press.

Chen, Y., Zhang, J., Liu, C. E., Liu, T., & He, W. (2021). Work-related identity discrepancy and employee innovation behavior: The role of intrinsic motivation and self-construal. *Chinese Management Studies*, 15(5), 1143–1156. https://doi.org/10.1108/CMS-02-2020-0330.

Cheng, J., Li, K., & Cao, T. (2023). How transformational leaders promote employees' feedback-seeking behaviors: The role of intrinsic motivation and its boundary conditions. *Sustainability*, 15(22), 15713.https://doi.org/10.3390/su152215713.

Cheung, G. W., Cooper-Thomas, H. D., Lau, R. S., & Wang, L. C. (2024). Reporting reliability, convergent and discriminant validity with structural equation modeling: A review and best-practice recommendations. *Asia Pacific Journal of Management*, 41(2), 745-783. https://doi.org/10.1007/s10490-024-09963-3.

Chiang, F.-K., Shang, X., & Qiao, L. (2022). Augmented reality in vocational training: A systematic review of research and applications. *Computers in Human Behavior*, 129, 107125. https://doi.org/10.1016/j.chb.2021.107125.

China Education Online. (2023, September 5). 2023 National Vocational Education Teachers' Status Survey Report Released. Available at : https://news.eol.cn/yaowen/202309/t20230905_2459514.shtml.

China University Rankings. (2024, May 24). China University Rankings Official Website. Retrieved from https://www.cnur.com/gsgz/1631.html.

Chiu, H. H. (2017). Employees' intrinsic and extrinsic motivations in innovation implementation: The moderation role of managers' persuasive and assertive strategies. *Journal of Change Management*. https://doi.org/10.1080/14697017.2017.1407353.

Choi, B. S., Kim, J. S., Lee, D. W., Paik, J. W., Lee, B. C., Lee, J. W., Lee, H. S., & Lee, H.-Y. (2018). Factors associated with emotional exhaustion in South Korean nurses: A cross-sectional study. *Psychiatry Investigation*, 15(7), 670–676. https://doi.org/10.30773/pi.2017.12.31.

Chou, C. M., Shen, C. H., Hsiao, H. C., & Shen, T. C. (2019). Factors influencing teachers' innovative teaching behaviour with information and communication technology (ICT): The mediator role of organisational innovation climate. *Educational Psychology*, 39(1), 65-85. https://doi.org/10.1080/01443410.2018.1519879.

Chung, Y. W., Park, J. H., & Yun, J. K. (2022). Can role overload result in positive outcomes? The relationships between role overload, psychological empowerment, organizational-based self-esteem, and task performance. *Korean Journal of Business Administration*, 35(8), 1479–1502. https://doi.org/10.18032/kaaba.2022.35.8.1479.

Church, A. H., & Waclawski, J. (1998). Designing and using multirater surveys for organization development and change. Organization Development Journal, 16(4), 23–32.

Clarke, N., & Higgs, M. (2020). Political Skill and Role Overload as Antecedents of Innovative Work Behavior in the Public Sector. *Public Personnel Management*, 49(3), 444–469. https://doi.org/10.1177/0091026019863450.

Clarke, N., & Higgs, M. (2020). Political skill and role overload as antecedents of innovative work behavior in the public sector. *Public Personnel Management*, 49(3), 444–469. https://doi.org/10.1177/0091026019863450 EconBiz.

Coatman, L. W. (2022). Antecedents in Building Resilience: Extending Conservation of Resources Theory (Doctoral dissertation, The University of North Carolina at Charlotte).

Cohen, L. (2017). Research methods in education (8th ed.). Routledge.

Collie, R. J. (2023). Teacher well-being and turnover intentions: Investigating the roles of job resources and job demands. *British Journal of Educational Psychology*, 93(3), 712–726. https://doi.org/10.1111/bjep.12587.

Collier, W. G. (2022). Future time perspective and self-ratings of creativity. *ATSK Journal of Psychology*, 3(1), 17–24. Retrieved from https://atsk.website/atskjpsyv3i1a2/.

Consiglio, C., Massa, N., Sommovigo, V., & Fusco, L. (2023). Techno-stress creators, burnout and psychological health among remote workers during the pandemic: The moderating role of e-work self-efficacy. *International Journal of Environmental Research and Public Health*, 20(9), 7051. https://doi.org/10.3390/ijerph20097051.

Costa, P. T., & McCrae, R. R. (2008). The Revised NEO Personality Inventory (NEO-PI-R). In G. J. Boyle, G. Matthews, & D. H. Saklofske (Eds.), The SAGE Handbook of Personality Theory and Assessment: Volume 2 - Personality Measurement and Testing (pp. 179-198). SAGE Publications. https://doi.org/10.4135/9781849200479.n9.

Creswell, J. W. (2014). Research design: Qualitative, quantitative, and mixed methods approaches (4th ed.). Sage Publications.

Cui, L. (2025). Construction of big data technology training environment for vocational education based on edge computing technology. In AIFE '24: Proceedings of the 2024 International Conference on Artificial Intelligence and Future Education (pp. 375–381). https://doi.org/10.1145/3708394.3708458.

Danermark, B., Ekström, M., & Karlsson, J. C. (2019). Explaining society: Critical realism in the social sciences. Routledge.

Daşkın, M., Baldıran, Ş., & Pala, K. (2023). The Role of Career Satisfaction on Cooks' Intrinsic Motivation, Work Engagement and Perceived Role-Overload. *İşletme Araştırmaları Dergisi*, 15(2), 878-893. https://doi.org/10.20491/isd.2023.1790.

Daud, S. R., Rahim, A., Abdullah, M. S., Sehat, N. S., Sarkam, S. F., Abas, N., & Suhaime, I. L. (2024). A conceptual framework for the individual factors fostering the innovative work behaviour of STEM teachers. *Information Management and Business Review*, 16(1), 252-261. https://doi.org/10.22610/imbr.v16i1.4283.

De Clercq, D., & Pereira, R. (2019). Resilient employees are creative employees, when the workplace forces them to be. *Creativity and Innovation Management*, 28(3), 329–342. https://doi.org/10.1111/caim.12328.

De Jong, J., & Den Hartog, D. (2010). Measuring innovative work behaviour. *Creativity and Innovation Management*, 19(1), 23–36. https://doi.org/10.1111/j.1467 8691. 2010.00547.x.

Deci, E. L., Olafsen, A. H., & Ryan, R. M. (2017). Self determination theory in work organizations: The state of a science. *Annual Review of Organizational Psychology and Organizational Behavior*, 4(1), 19–43. https://doi.org/10.1146/annurevorgpsych 032516 113108.

Dehalwar, K., & Sharma, S. N. (2023). Fundamentals of research writing and uses of research methodologies. Edupedia Publications Pvt Ltd.

Dehghanizadeh, M., Jalali, F., & Badfar Chaleshtori, S. The effect of resilience and optimism on emotional exhaustion and job stress of nurses in the fighting against epidemics. *Journal of Health Management & Information Science*, 2023;10(2), 78–86. https://doi.org/10.30476/JHMI.2024.101085.1195.

Demerouti, E., & Bakker, A. B. (2023). Job demands-resources theory in times of crises: New propositions. *Organizational Psychology Review*, 13(3), 209–236. https://doi.org/10.1177/20413866221135022.

Demircioglu, M. A. (2023). The effects of innovation climate on employee job satisfaction and affective commitment: Findings from public organizations. *Review of Public Personnel Administration*, 43(1), 130–158. https://doi.org/10.1177/0734371X211043559.

Deng, Q., Zheng, B., & Chen, J. (2020). The relationship between personality traits, resilience, school support, and creative teaching in higher school physical education teachers. *Frontiers in Psychology*, 11, 568906. https://doi.org/10.3389/fpsyg.2020.568906.

DeVellis, R. F. (1991). Scale development: Theory and applications. Sage Publications.

DeVellis, R. F. (2017). Scale development: Theory and applications (4th ed.). Sage.

Dixit, A., & Upadhyay, Y. (2021). Role of JD-R model in upticking innovative work behaviour among higher education faculty. *RAUSP Management Journal*, 56, 156–169. https://doi.org/10.1108/RAUSP-03-2020-0060.

Dodanwala, T.C. and Shrestha, P. (2021), "Work–family conflict and job satisfaction among construction professionals: the mediating role of emotional exhaustion", On the Horizon, 29(2), 62-75. https://doi.org/10.1108/OTH-11-2020-0042.

Dong, X., Tian, Y., He, M., & Wang, T. When knowledge workers meet AI? The double-edged sword effects of AI adoption on innovative work behavior. *Journal of Knowledge Management*, 2025;29(1), 113–147. doi:10.1108/JKM-02-2024-0222.

Dörnyei, Z., & Ushioda, E. (2021). Teaching and researching motivation (3rd ed.). Routledge. https://doi.org/10.4324/9781351006743.

Dou, G., Yang, J., Yang, L., Liu, B., & Yuan, Y. (2022). Where there is pressure, there is motivation? The impact of challenge hindrance stressors on employees' innovation performance. *Frontiers in Psychology*, 13, Article 1020764. https://doi.org/10.3389/fpsyg.2022.1020764.

Du, T., & Chang, Y. C. (2023). Influence of organizational innovation climate on creativity and the mediating role of feedback-seeking behavior—A case study of university teachers in Hebei, China. *International Journal of Learning, Teaching and Educational Research*, 22(4), 87-103.

Dubey, U. K. B., & Kothari, D. P. (2022). Research methodology: Techniques and trends (1st ed.). Chapman and Hall/CRC. https://doi.org/10.1201/9781315167138.

DUxbury, L., Stevenson, M., & Higgins, C. (2018). Too much to do, too little time: Role overload and stress in a multi role environment. *International Journal of Stress Management*, 25(3), 250–266. https://doi.org/10.1037/str0000078.

Edú Valsania, S., Laguía, A., & Moriano, J. A. (2022). Burnout: A review of theory and measurement. *International Journal of Environmental Research and Public Health*, 19(3), 1780. https://doi.org/10.3390/ijerph19031780.

El Kiassi, J., & Jahidi, R. (2023). Technostress: A concept analysis. *International Journal of Accounting, Finance, Auditing, Management and Economics*, 4(3 1), 154–169. https://doi.org/10.5281/zenodo.8002337.

Elahi, N. S., Rasheed, M. A., Jamshed, S., & Bajwa, S. U. (2024). Resilience as a shield: Self-efficacy and well-being in the face of exploitative leadership. *International Journal of Productivity and Performance Management*. https://www.emerald.com/insight/1741-0401.htm.

El-Sayed, N. (2022). The role of psychological resilience in reducing psychological stress among teachers. *Journal of Education and Health Promotion*, 11(1), 290. https://doi.org/10.4103/jehp.jehp_1835_21.

Ertaş, B. D., & Pekmezci, F. B. (2025). Career motivation and job satisfaction in Türkiye: Mediating role of teacher innovativeness and instructional practice. *The Asia Pacific Education Researcher*, 34(1), 193–207. https://doi.org/10.1007/s4029902400724 w.

Eslami, G., Hashemian, S. M., Khorakian, A., & Adibzadeh, M. (2023). How role overload affects female teachers' work-life balance crafting behaviours: A coexistence collective moderation model. *International Journal of Management in Education*, 18(1), 46–69. https://doi.org/10.1504/IJMIE.2024.135185.

Etikan, I., Musa, S. A., & Alkassim, R. S. (2016). Comparison of convenience sampling and purposive sampling. *American Journal of Theoretical and Applied Statistics*, 5(1), 1–4. https://doi.org/10.11648/j.ajtas.20160501.11.

European Parliament & Council. (2016). General Data Protection Regulation (GDPR). Retrieved from https://gdpr-info.eu

Fadli, F., Astuti, S. I. D., & Rukiyati, R. (2020). Techno-resilience for teachers: Concepts and action. *TEM Journal*, 9(2), 820–825. https://doi.org/10.18421/TEM92-53.

Faiz Rasool, S., Almas, T., Afzal, F., & Mohelska, H. (2024). Inclusion of JD-R theory perspective to enhance employee engagement. *Sage Open*, 14(1), 21582440231 220207. https://doi.org/10.1177/21582440231220207.

Fajri, A., & Agbo, A. A. (2024, November). A systematic literature review of innovative work behavior in conservation of resources theory. *Economics and Business International Conference Proceeding*, 1(2), 605-615.

Fasbender, U., Wöhrmann, A. M., Wang, M., & Klehe, U. C. (2019). Is the future still open? The mediating role of occupational future time perspective in the effects of career adaptability and aging experience on late career planning. *Journal of Vocational Behavior*, 111, 24–38. https://doi.org/10.1016/j.jvb.2018.12.005.

Feng, J., Zhang, Y., Liu, X., Zhang, L., & Han, X. (2018). Just the right amount of ethics inspires creativity: A cross level investigation of ethical leadership, intrinsic motivation, and employee creativity. *Journal of Business Ethics*, 153(3), 645–658. https://doi.org/10.1007/s10551 016 34449.

Fernández-Fernández, M., Martínez-Navalón, J.-G., Gelashvili, V., & Prado Román, C. (2023). The impact of teleworking technostress on satisfaction, anxiety and performance. *Heliyon*, 9(6), e17201. https://doi.org/10.1016/j.heliyon.2023.e17 201.

Ferreira, P., & Gomes, S. (2021). The role of resilience in reducing burnout: A study with healthcare workers during the COVID-19 pandemic. *Social Sciences*, 10(9), 317. https://doi.org/10.3390/socsci10090317.

Fey, S., & Kock, A. (2022). Meeting challenges with resilience – How innovation projects deal with adversity. *International Journal of Project Management*, 40(8), 941-950. https://doi.org/10.1016/j.ijproman.2022.10.006.

Fidan, T., & Oztürk, I. (2015). The relationship of the creativity of public and private school teachers to their intrinsic motivation and the school climate for innovation. *Procedia - Social and Behavioral Sciences*, 195, 905–914. https://doi.org/10.1016/j.sbspro.2015.06.370.

Field, A. (2018). Discovering statistics using IBM SPSS statistics (5th ed.). SAGE Publications.

Filatotchev, I., Ireland, R. D., & Stahl, G. K. (2022). Contextualizing management research: An open systems perspective. *Journal of Management Studies*, 59(4), 1036–1056. https://doi.org/10.1111/joms.12754.

Finch, W. H. (2020). Using fit statistic differences to determine the optimal number of factors to retain in an exploratory factor analysis. *Educational and Psychological Measurement*, 80(2), 217–241. https://doi.org/10.1177/0013164419865769.

Fischer, C., Malycha, C. P., & Schafmann, E. (2019). The influence of intrinsic motivation and synergistic extrinsic motivators on creativity and innovation. *Frontiers in Psychology*, 10, Article 137. https://doi.org/10.3389/fpsyg.2019.00137.

Fischer, H. E., Boone, W. J., & Neumann, K. (2023). Quantitative research designs and approaches. In Handbook of research on science education (pp. 28-59). Routledge.

Fischer, T., & Riedl, R. (2022). On the stress potential of an organisational climate of innovation: A survey study in Germany. *Behaviour & Information Technology*, 41(4), 805-826. https://doi.org/10.1080/0144929X.2020.1855519.

Fishbach, A., & Woolley, K. (2022). The structure of intrinsic motivation. *Annual Review of Organizational Psychology and Organizational Behavior*, 9(1), 339-363. https://doi.org/10.1146/annurev-orgpsych-012620-022119.

Flores-Builes, R., Caballer-Miedes, A., & Mateu-Pérez, R. (2022). Resilience in teachers: Validation of the Spanish version of the CD-RISC10 scale in early childhood, primary, and special education teachers. I*nternational Journal of Environmental Research and Public Health*, 19(11), 11020. https://doi.org/10.3390/ijerph19111020.

Forza, A. G., & Nugroho, S. P. (2023) The influence of remote work on innovative work behavior with work–life balance and technostress as moderating variables. *Proceedings of the International Conference on Digital Advance Tourism, Management and Technology*, 1(1), 457–466. https://doi.org/10.56910/ictmt.v1i1.89.

Fu, X., Xia, L., Chen, L., Fan, Y., Qin, H., & Chen, L. (2025) Organizational innovation climate and nurses' innovation behavior in a specialized oncology hospital: The chain mediation of achievement motivation and creative self-efficacy. *BMC Nursing*, 24, 951. https://doi.org/10.1186/s12912-025-03595-8.

Fuchs, C. (2021). What is critical theory? In Foundations of Critical Theory (pp. 17-51). Routledge.

Fujimura, J. H. (2024). On methods, ontologies, and representation in the sociology of science: Where do we stand? In Social Organization and Social Process (pp. 207-248). Routledge.

Fullerton, D. J., Zhang, L. M., & Kleitman, S. (2021). An integrative process model of resilience in an academic context: Resilience resources, coping strategies, and positive adaptation. *PLOS ONE*, 16(2), e0246000. https://doi.org/10.1371/journal.pone.0246000.

Gagné, M., Deci, E. L., & Ryan, R. M. (2018). Self-determination theory applied to work motivation and organizational behavior. In The SAGE handbook of industrial, work & organizational psychology: Organizational psychology (Vol. 2, pp. 97-121). SAGE.

Galanakis, M. D., & Tsitouri, E. (2022). Positive psychology in the working environment. Job demands-resources theory, work engagement and burnout: A systematic literature review. *Frontiers in Psychology*, 13, Article 1022102. https://doi.org/10.3389/fpsyg.2022.1022102.

Gannon, M. J., Taheri, B., & Azer, J. (2022). Contemporary research paradigms and philosophies. In Contemporary research methods in hospitality and tourism (pp. 5-19). Emerald Publishing Limited.

García-Arroyo, J. A., & Segovia, A. O. (2019). Work overload and emotional exhaustion in university teachers: Moderating effects of coping styles. *Universitas Psychologica*, 18(2), 1-12. https://doi.org/10.11144/Javeriana.upsy18-2.waaet.

Gawali, R. B. (2023). Research methodology and statistical methods. *Academic Guru Publishing House*.

Gelaidan, H. M., Al Fadil, N., & Abdullah, M. (2024). Teachers' innovative behavior in higher education: Examining the impact of leadership and motivation. *Educational Psychology*, 44(1), 85–101. https://doi.org/10.1080/01443410.2024.1840227.

Ghanad, A. (2023). An overview of quantitative research methods. *International Journal of Multidisciplinary Research and Analysis*, 6(08), 3794-3803. https://doi.org/10.47191/ijmra/v6i8.17.

Ghanbaripour, A. N., Talebian, N., Miller, D., Tumpa, R. J., Zhang, W., Golmoradi, M., & Skitmore, M. (2024). A Systematic Review of the Impact of Emerging Technologies on Student Learning, Engagement, and Employability in Built Environment Education. *Buildings*, 14(9), 2769. https://doi.org/10.3390/Buildings14092769.

Ghosh, L., & Ravichandran, R. (2024). Emerging technologies in vocational education and training. *Journal of Digital Learning and Education*, 4(1), 41-49. https://doi.org/10.1080/26322414.2024.1911950.

Giauque, D., & Weissbrodt, R. (2021). Job demands-resources model: Toward an institutional reading. In Research handbook on HRM in the public sector (pp. 218-231). Edward Elgar Publishing.

Giroux, H. A. (2023). Critical theory and educational practice. In The Critical Pedagogy Reader (pp. 50-74). Routledge.

Gkontelos, A., Vaiopoulou, J., & Stamovlasis, D. (2023). Teachers' innovative work behavior as a function of self-efficacy, burnout, and irrational beliefs: A structural equation model. *European Journal of Investigation in Health, Psychology and Education*, 13(2), 403–418. https://doi.org/10.3390/ejihpe13020030.

Golzar, J., Noor, S., & Tajik, O. (2022). Convenience sampling. *International Journal of Education & Language Studies*, 1(2), 72–77. https://doi.org/10.22034/ijels.2022.162981.

Gong, Z., Sun, F., & Li, X. (2021). Perceived overqualification, emotional exhaustion, and creativity: A moderated-mediation model based on effort–reward imbalance theory. *International Journal of Environmental Research and Public Health*, 18(21), 11367. https://doi.org/10.3390/ijerph182111367.

Granziera, H., Collie, R., & Martin, A. (2021). Understanding teacher wellbeing through job demands-resources theory. In C. F. Mansfield (Ed.), Cultivating teacher resilience (pp. 229–244). Springer. https://doi.org/10.1007/978-981-15-5963-1_14.

Grover, S. L., Teo, S. T., Pick, D., Roche, M., & Newton, C. J. (2018). Psychological capital as a personal resource in the JD-R model. *Personnel Review*, 47(4), 968–984. https://doi.org/10.1108/PR-05-2017-0151.

Grygorenko, Z., & Naydonova, G. (2023). The concept of "resilience": History of formation and approaches to definition. *Public Administration and Law Review*, (2), 76–88. https://doi.org/10.36690/2674-5216-2023-2-76-88.

Gu, Q. (2018). Reconceptualising teacher resilience: A social-ecological approach to understanding teachers' professional worlds. In Resilience in Education: Concepts, Contexts and Connections (pp. 13–33). https://doi.org/10.1007/978-3-319-76690-4_2

Guo, L., Cheng, K., & Luo, J. (2021). The effect of exploitative leadership on knowledge hiding: a conservation of resources perspective. Leadership & Organization Development Journal, 42(1), 83-98.ion of conservation of resources theory. *Group & Organization Management*, 46(4), 657-691. https://doi.org/10.1108/LODJ-12-2019-0467.

Hai, S., & Park, I. J. (2024). How and when does the career future time perspective motivate service performance? *The International Journal of Human Resource Management*, 35(6), 1193–1224. https://doi.org/10.1080/09585192.2023.2266678.

Hair, J. F., Black, W. C., Babin, B. J., & Anderson, R. E. (2009). Multivariate data analysis (7th ed.). Pearson Prentice Hall.

Hair, J. F., Hult, G. T. M., Ringle, C. M., & Sarstedt, M. (2018). A primer on partial least squares structural equation modeling (PLS-SEM) (2nd ed.). SAGE Publications. https://doi.org/10.1007/978-3-319-71691-6.

Hair, J. F., Risher, J. J., Sarstedt, M., & Ringle, C. M. (2019). When to use and how to report the results of PLS-SEM. *European Business Review*, 31(1), 2-24.

Hakanen, J. J., Bakker, A. B., & Turunen, J. (2021). The relative importance of various job resources for work engagement: A concurrent and follow-up dominance analysis. *Journal of Organizational Effectiveness: People and Performance*, 27(3), 233–249. https://doi.org/10.1108/JOEPP-10-2020-0264.

Hamid, M. (2024). Does technostress moderate between intention to use ICT and innovative behavior: Exploring antecedents of digital mindset. *Journal of Digitovation and Information System*, 4(1), 48–61. https://doi.org/10.54433/JDIS/2024/010037.

Hao, T., Wang, W., Wang, G., Yang, Q., & Ma, K. (2024). From “chosen ones” to “leftovers”: A historical analysis of China’s vocational education and training system, 1949–2023. Education+ Training. https://doi.org/10.1108/ET-09-2023-0412.

Harris, K. J., Harris, R. B., Valle, M., Carlson, J., Carlson, D. S., Zivnuska, S., & Wiley, B. (2022). Technostress and the entitled employee: Impacts on work and family. *Information Technology & People*, 35(3), 1073-1095.

Hassan, R. S., Amin, H. M., & Ghoneim, H. (2024). Decent work and innovative work behavior of academic staff in higher education institutions: the mediating role of work engagement and job self-efficacy. *Humanities and Social Sciences Communications*, 11(1), 1-19. https://doi.org/10.1057/s41599-024-01569-4.

Hatlevik, I. K., & Hatlevik, O. E. (2018). Examining the relationships between teachers’ ICT self-efficacy for educational purposes, collegial collaboration, lack of facilitation, and the use of ICT in teaching practice. *Frontiers in Psychology*, 9, 935. https://doi.org/10.3389/fpsyg.2018.00935.

He, Q., Liu, N., & Sun, Y. (2020). Role stress and its influence on university teachers' performance and health: The mediating role of job satisfaction and the moderating effect of proactive personality. Higher Education Exploration, 1.

He, Y., & Qi, Z. (2023). Research on the contribution of higher vocational education to economic growth in China. *Journal of Southwest University for Nationalities (Humanities and Social Sciences Edition)*, 2.

Heilongjiang Daily. (2023, May). Heilongjiang: Striving to build a modern vocational education system. *Heilongjiang Provincial Government Website*. https://www.hlj.gov.cn/hlj/c107856/202305/c00_31601597.shtml.

Heilongjiang Provincial Department of Education. (2025). Heilongjiang vocational education statistics report. *Heilongjiang Provincial Department of Education*. https://www.hlje.gov.cn.

Herbiyanti, F., Rahmawati, I., Hardjowikarto, D. A., & Suzana, A. (2024). The role of intrinsic motivation on innovative work behavior mediated by creative self-efficacy. *Journal of Research of Social Economics and Management (JRSSEM)*, 3(12), 1687–1698.

Hernaus, T., Černe, M., & Vujcic, M. (2022). Leader–member innovative work behavior (In) congruence and task performance: the moderating role of work engagement. *European Management Journal*, 41(5), 687-699. https://doi.org/10.1016/j.emj.2022.02.006.

Hessari, H., & Nategh, T. (2022) The role of co-worker support for tackling technostress along with these influences on need for recovery and work motivation. *International Journal of Intellectual Property Management*, 12(2). https://doi.org/10.55927/ijbae.v3i4.9617.

Hessari, H., Daneshmandi, F., & Nategh, T. (2024). Examining the impact of technostress on perceived organizational commitment: The mediating role of individual innovation. *International Journal of Business and Applied Economics*, 3(4), 803–824. https://doi.org/10.55927/ijbae.v3i4.9617.

Hidayat, R., & Patras, Y. E. (2024). Teacher innovativeness: The effect of self-efficacy, transformational leadership, and motivation. *International Journal of Innovation in Professional Management*, 12(1), 1-12. https://doi.org/10.1504/IJIPM.2022.122301.

Hidayat, R., & Patras, Y. E. (2024). Teacher innovativeness: The effect of self-efficacy, transformational leadership, and school climate. *Journal of Pedagogical Research*, 8(1), 1–15. https://doi.org/10.33902/JPR.202424547.

Hobfoll, S. E. Conservation of resources theory: Its implication for stress, health, and resilience. In Folkman, S. (Ed.), The Oxford Handbook of Stress, Health, and Coping (pp. 127–147). Oxford University Press, 2011.

Hobfoll, S. E., Ennis, N., & Kay, J. (2021). Loss, resources, and resiliency in close interpersonal relationships. In Loss and trauma (pp. 267-285). Routledge.

Hobfoll, S. E., Halbesleben, J. R. B., Neveu, J.-P., & Westman, M. (2018) Conservation of resources in the organizational context: The reality of resources and their consequences. *Annual Review of Organizational Psychology and Organizational Behavior*, 5(1), 103–128. https://doi.org/10.1146/annurev-orgpsych-032117-104640.

Hock-Doepgen, M., Montasser, J. S., Klein, S., Clauss, T., & Maalaoui, A. (2025). The role of innovative work behavior and organizational support for business model innovation. *R&D Management*, 55(1), 7–26. https://doi.org/10.1111/radm.12425.

Hong, S.（2025） The impact of future time perspective on academic achievement: Mediating roles of academic burnout and engagement. *PLOS ONE*, 20(1), e0316841. https://doi.org/10.1371/journal.pone.0316841.

Hornung, O., & Smolnik, S. (2021). AI invading the workplace: Negative emotions towards the organizational use of personal data. *Journal of Organizational Behavior and Technology*, 18(2), 103-120.

Hossain, K. A. (2023). Evaluation of technological breakthrough in global education and future employment opportunity. *Journal of Liberal Arts and Humanities (JLAH)*, 4(8), 1–62. https://doi.org/10.48150/jlah.v4no8.2023.a1.

Hosseini, S., & Haghighi Shirazi, Z. R. (2021). Towards teacher innovative work behavior: A conceptual model. *Cogent Education*, 8(1), 1869364. https://doi.org/10.1080/2331186X.2020.1869364.

Hothersall, S. J. (2025). Social work: Ontology, epistemology, and methodology. In Handbook of Research Methods in Social Work (pp. 27-38). Edward Elgar Publishing.

Hoxha, S., & Ramadani, R. (2024). The impact of intrinsic motivation on the sustainable extra-role performance with the mediating role of job engagement. *Sustainability*, 16(17), 7643.

Hsieh, C.-C., Ho, S. S.-H., Li, H.-C., & Liang, J.-K. (2021). Mindfulness as moderator against emotional exhaustion due to online teaching during COVID-19 pandemic: An investigation using job demands–resources model and conservation of resource theory. *Frontiers in Psychology*, 12: 781804. https://doi.org/10.3389/fpsyg.2021.781804.

Hu, Q., Lu, Y., Pan, Z., & Wang, B. (2023). How does AI use drive individual digital resilience? A conservation of resources (COR) theory perspective. *Behaviour & Information Technology*, 42(15), 2654-2673.

Huang, B., Ma, L., & Xia, W. (2021). The mixed effect of role overload on extra-role performance: The mediation role of behavioral inhibition system/behavioral activation system responses. *Frontiers in Psychology*, 12, 748732. https://doi.org/10.3389/fpsyg.2021.748732.

Huang, H., & Li, F. (2021). Innovation climate, knowledge management, and innovative work behavior in small software companies. *Social Behavior and Personality*, 49(4), e9780. https://doi.org/10.2224/sbp.9780.

Huang, J. L., Bowling, N. A., Liu, M., & Li, Y. (2016). Detecting insufficient effort responding with an infrequency scale: Evaluating validity and participant reactions. *Journal of Business and Psychology*, 27(1), 99–114. https://doi.org/10.1007/s10869-011-9231-8.

Huo, M.-L., & Jiang, Z. (2023). Work-role overload, work–life conflict, and perceived career plateau: The moderating role of emotional stability. *Human Resource Management*. https://doi.org/10.1002/hrm.22167.

Huo, W., Xu, X., Li, X., Xie, J., & Sun, L. (2023). Work-related use of information and communication technologies after-hours (W_ICTs) and employee innovation behavior: a dual-path model. *Information Technology & People*, 36(6), 2259-2279. https://doi.org/10.1108/ITP-06-2022-0583.

Hur, W. M., & Moon, T. W. (2024). How does perceived corporate social responsibility affect job performance during the COVID-19 pandemic? The roles of resilience and help exchange dynamics. *Current Psychology*, 43(27), 23305-23319. https://doi.org/10.1007/s12144-023-04562-2.

Hur, W. M., Moon, T. W., & Jun, J. K. (2016). Workplace incivility and employee creativity: The mediating role of emotional exhaustion and intrinsic motivation. *Journal of Organizational Behavior*, 37(4), 521–540. https://doi.org/10.1002/job.2050.

Hurbean, L., Dospinescu, O., Munteanu, V., & Danaiata, D. (2022). Effects of instant messaging related technostress on work performance and well being. *Electronics*, 11(16), 2535. https://doi.org/10.3390/electronics11162535.

Husana, M. B., & Velasco, C. P. (2023). Innovative teaching behavior and environment in promoting task motivation among elementary school teachers. *International Journal of Social Science Humanity & Management Research*, 2(10), 1032–1065. https://doi.org/10.58806/ijsshmr.2023.v2i10n02.

Huu, P. T. (2023). Impact of employee digital competence on the relationship between digital autonomy and innovative work behavior: A systematic review. *Artificial Intelligence Review*, 56(3), 14193–14222. https://doi.org/10.1007/s10462-023-10492-6.

Ikram, H. (2023). Burning out of time: The relationship between future time perspective, workaholism, psychological capital, emotional intelligence, and burnout. *Journal of Occupational Health Psychology*, 28(4), 335-350. https://doi.org/10.1037/ocp0000302.

Iliyasu, R., & Etikan, I. (2021). Comparison of quota sampling and stratified random sampling. *Biometrics & Biostatistics International Journal*, 10(1), 24–27. https://doi.org/10.15406/bbij.2021.10.00326.

Indajang, K., Sembiring, L. D., Sherly, Efendi, & Sudirman, A. (2023). Innovative work behavior strengthening model: Role of self-efficacy, knowledge sharing, and organisational creative climate as predictors. *Valid Jurnal Ilmiah*, 21(1), 44–53. https://doi.org/10.53512/valid.v21i1.326.

Jaingam, W., & Na-Nan, K. (2023).The mediating effect of resilience on the relationship between perceived organizational support and innovative work behavior. *International Journal of Advanced and Applied Sciences*, 10(9), 45–56. https://doi.org/10.21833/ijaas.2023.09.006.

Jaiswal, A., Sengupta, S., Panda, M., Hati, L., Prikshat, V., Patel, P., & Mohyuddin, S. (2024). Teleworking: role of psychological well-being and technostress in the relationship between trust in management and employee performance. *International Journal of Manpower*, 45(1), 49-71. https://doi.org/10.1108/IJM-10-2023-0657.

Jamal, A., Begum, S., Alam, H., & Hussain, T. (2023). Impact of perceived organizational support on innovative work behavior and burnout in teachers: Thriving at work as the mediator. *Journal of Education and Educational Development*, 10(2), 288-307. https://doi.org/10.22555/joeed.v10i2.5425.

Janssen, O. (2000). Job demands, perceptions of effort-reward fairness and innovative work behaviour. *Journal of Occupational and Organizational Psychology*, 73(3), 287-302. https://doi.org/10.1348/096317900167038.

Javed, B., Fatima, T., Khan, A. K., & Bashir, S. (2020). Impact of inclusive leadership on innovative work behavior: The role of creative self-efficacy. *Journal of Creative Behavior*. https://doi.org/10.1002/jocb.487.

Jena, R. K. (2015). Technostress in ICT enabled collaborative learning environment: An empirical study among Indian academicians. *Computers in Human Behavior*, 51, 1116-1123. https://doi.org/10.1016/j.chb.2015.03.020.

Jeong, J., & Song, Y. (2022). Mediating effect of resilience between post-traumatic stress and emotional exhaustion in nurses during the COVID-19 pandemic. *Journal of Korean Academic Society of Nursing Education*, 28(2), 193–203. https://doi.org/10.5977/jkasne.2022.28.2.193.

Jia, X., Liao, S., & Yin, W. (2022). Job insecurity, emotional exhaustion, and workplace deviance: The role of corporate social responsibility. *Frontiers in Public Health*, 10. https://doi.org/10.3389/fpubh.2022.1000628.

Jia, Y., Hou, Z., and Zhang, R. (2025). Career decision-making difficulties and mental health: The joint moderations of proactive coping and future time perspective. *Journal of Career Assessment*, e1343022. https://doi.org/10.1177/10690727251343022.

Jiang, S., Wang, J., Zhang, R., & Liu, O. (2023). Innovation climate for individual motivation and innovation performance: Is innovative work behavior a missing link? *Journal of Innovation & Knowledge*, 8(4), 100440. https://doi.org/10.1016/j.jik.2023.100440.

Jolliff, A., & Strubler, D. (2021). Integrating model of resilience, engagement, and motivation. *International Journal of Business Management & Research*, 9(2), BMN-IJBMR-2021-31. https://doi.org/10.37391/IJBMR.090208.

Jolly, P. M., Kong, D. T., & Kim, K. Y. (2021). Social support at work: An integrative review. *Journal of Organizational Behavior*, 42(2), 229-251. https://doi.org/10.1002/job.2463.

Jöreskog, K. G., & Sörbom, D. (1984). LISREL VI: Analysis of linear structural relationships by the method of maximum likelihood. Scientific Software.

Kacmar, K. M., Andrews, M. C., Valle, M., Tillman, C. J., & Clifton, C. (2020). The interactive effects of role overload and resilience on family–work enrichment and associated outcomes. *The Journal of Social Psychology*, 160(5), 688–701. https://doi.org/10.1080/00224545.2020.1735985.

Kaewkungwal, J., & Adams, P. (2019). Ethical consideration of the research proposal and the informed-consent process: An online survey of researchers and ethics committee members in Thailand. *Accountability in Research*, 26(3), 176-197.

Kaiser, H. F. (1974). An index of factorial simplicity. *Psychometrika*, 39(1), 31–36. https://doi.org/10.1007/BF02291575 Springer.

Kaiser, H. F., & Rice, J. (1974). Little Jiffy, Mark IV. *Educational and Psychological Measurement*, 34(1), 111–117. https://doi.org/10.1177/001316447403400115.

Karadeniz, B., Erzurum, E., Akcan, A. F., & Zaim, S. (2021). Intrinsic motivation and innovative work behavior: The mediating role of creative self-efficacy. *European Proceedings of Social and Behavioural Sciences*. https://doi.org/10.15405/epsbs. 2021.12.04.14.

Karimi, S., Ahmadi Malek, F., Yaghoubi Farani, A., & Liobikienė, G. (2023). The role of transformational leadership in developing innovative work behaviors: The mediating role of employees' psychological capital. *Sustainability*, 15(2), 1267. https://doi.org/10.3390/su150212.

Kassim, E. S., Ahmad, S. F. S., Bahari, A. H., Fadzli, F. N. M., & Adzmi, N. S. H. M. (2021). The effect of technostress on emotional exhaustion and coping strategies. *International Journal of Academic Research in Business and Social Sciences*, 11(5), 544–559. https://doi.org/10.6007/IJARBSS/v11-i5/9856.

Kelleher, A. L. (2024). Employees' orientations, job control and workload: A future time perspective on the role of the preferred self in engagement (Doctoral dissertation, Birkbeck, University of London).

Keshavarz, H., Saeidnia, H. R., & Wang, T. (2025). Navigating technostress: A deep dive into health practitioners' technological challenges in hospital settings. *BMC Health Services Research*, 25(1), 18. https://doi.org/10.1186/s12913-025-09456-8.

Khalequzzaman, M., Wang, S., Zhang, N., & Wang, L. (2025). Digital transformation stressors in banking: Technostress as a mediator and organizational support as a moderator of job performance. *Acta Psychologica*, 260, 105612. https://doi.org/10.1016/j.actpsy.2025.105612.

Khan, A. R., & Shamsi, A. F. (2022). Leading the innovation: Role of eustress and work engagement as simultaneous mediators between JD-R and innovative work behavior. *International Research Journal of Management and Social Sciences*, 3(2), April–June. https://doi.org/10.5281/zenodo.10275867.

Khan, A., & Shamsi, M. (2021). Work engagement and its impact on job outcomes: The moderating role of intrinsic motivation. *Journal of Work and Organizational Psychology*, 37(2), 137–148. https://doi.org/10.1016/j.jwop.2021.05.001.

Khatri, C. (2020). Epistemology in research: The foundation of social science. *Journal of Social Research Methodology*, 3(2), 45–53.

Khlaif, Z. N., Sanmugam, M., Joma, A. I., Odeh, A., & Barham, K. (2023). Factors influencing teacher's technostress experienced in using emerging technology: A qualitative study. *Technology, Knowledge and Learning*, 28, 865–899. https://doi.org/10.1007/s10758-022-09607-9.

Kholifah, S. A., Noviekayati, I., & Santi, D. E. (2023). Improve future orientation with goal setting training as viewed from internal locus of control. *Uniglobal Journal of Social Sciences and Humanities*, 2(2), 23-30.

Kilroy, S., Flood, P. C., Bosak, J., & Chênevert, D. (2016). Perceptions of high-involvement work practices and burnout: The mediating role of job demands. *Journal of Management Studies*, 53(6), 930-958. https://doi.org/10.1111/1748-8583.12112.

Kim, J., & Jung, H. S. (2022). The effect of employee competency and organizational culture on employees' perceived stress for better workplace. *International Journal of Environmental Research and Public Health*, 19(8), 4428.

Kim, M., Koo, D.-W., & Han, H.-S. (2021). innovative work behavior motivations among frontline employees: The mediating role of knowledge management. *International Journal of Hospitality Management*, 99, 103062. https://doi.org/10.1016/j.ijhm.2021.103062.

Kivunja, C., & Kuyini, A. B. (2017). Understanding and applying research paradigms in educational contexts. *International Journal of Higher Education*, 6(5), 26–41. https://doi.org/10.5430/ijhe.v6n5p26.

Kline, R. B. (2015). Principles and practice of structural equation modeling (4th ed.). Guilford Press.

Klotz, A. C., Swider, B. W., & Kwon, S. H. (2023). Back-translation practices in organizational research: Avoiding loss in translation. *Journal of Applied Psychology*, 108(5), 699–710. https://doi.org/10.1037/apl0001117.

Kong, T., & Wang, H.-P. (2024). Research on the influence of perceived organizational support and job reshaping on the innovative work behavior of vocational college teachers in China. *Pakistan Journal of Life and Social Sciences*, 22(2), 7732–7748. https://doi.org/10.57239/PJLSS-2024-22.2.00583.

Kooij, D. T. A. M., Tims, M., & Akkermans, J. (2017). The influence of future time perspective on work engagement and job performance: The role of job crafting. *European Journal of Work and Organizational Psychology*, 26(1), 4–15. https://doi.org/10.1080/1359432X.2016.1209489.

Koopman, J., Lanaj, K., & Scott, B. A. (2016). Integrating the bright and dark sides of OCB: A daily investigation of the benefits and costs of helping others. *Academy of Management Journal*, 59(2), 414–435. https://doi.org/10.5465/amj.2014.0146.

Koroglu, Ş., & Ozmen, O. (2022). The mediating effect of work engagement on innovative work behavior and the role of psychological well-being in the job demands–resources (JD-R) model. *Asia-Pacific Journal of Business Administration*, 14(1). https://doi.org/10.1108/APJBA-08-2020-0323.

Kraus, S. A. C., & September, B. (2025). Individual Resources in a Global Work Environment: An Examination of their Nature and Contribution to Goal Achievement.

Kumar, A., & Praveenakumar, S. G. (2025). Research methodology. Authors Click Publishing.

Kumar, P. S. (2024). Technostress: A comprehensive literature review on dimensions, impacts, and management strategies. *Computers in Human Behavior Reports*, 16, 100475. https://doi.org/10.1016/j.chbr.2024.100475.

Kumar, V., & Kamalanabhan, T. J. (2017). Moderating role of work support in stressor–burnout relationship: An empirical investigation among police personnel in India. *Psychological Studies*, 62(1), 85–97. https://doi.org/10.1007/s12646-017-0383-0.

Kundu, A., & Roy, D. D. (2023). How do teachers innovate? Role of efficacy for innovation and school climate perception. *Psychology in the Schools*, 60(12), 4885–4903. https://doi.org/10.1002/pits.22987.

Kunzelmann, A., & Rigotti, T. (2021). How time pressure is associated with both work engagement and emotional exhaustion: The moderating effects of resilient capabilities at work. *German Journal of Human Resource Management*, 35(3), 309-336.

Kwon, K., & Kim, T. (2020). An integrative literature review of employee engagement and innovative work behavior: Revisiting the JD-R model. *Human Resource Management Review*, 30(2), 100704. https://doi.org/10.1016/j.hrmr.2019.100704.

Kwon, M., & Sonday, L. (2024). The moralization of intrinsic motivation: Opportunities and perils. Academy of Management Review. *Advance online publication*. https://doi.org/10.5465/amr.2021.0467.

Lackey, D., Szolosi, A. M., & Martin, B. (2025). Understanding what's at the "COR" of instructor burnout: A Conservation of Resources and Job Demands-Resources perspective. *Journal of Outdoor Recreation, Education, and Leadership*, 17(1). https://doi.org/10.18666/JOREL-2025-12572.

Lambriex-Schmitz, P., Van der Klink, M. R., Beausaert, S., Bijker, M., & Segers, M. (2020). When innovation in education works: Stimulating teachers' innovative work behaviour. *International Journal of Training and Development*, 24(2), 118–134. https://doi.org/10.1111/ijtd.12175.

Lasisi, T. T., Enea, C., Eluwole, K. K., & Egeli, S. (2024). A parallel mediation study of hospitality employee's innovative work behavior and proactivity using self-determination theory. *Sage Open*, 14(3), 21582440241251933.

Lattrich, K.-K., & Büttgen, M. (2020). Project leaders' control resources and role overload as predictors of project success: Developing the job demands–resources model. *Business Research*, 13, 767–788. https://doi.org/10.1007/s40685-020-00115-z Springer.

Lawani, A. (2021). Critical realism: What you should know and how to apply it. *Qualitative Research Journal*, 21(3), 320-333.

Layder, D. (2021). Social sciences, social reality and the false division between theory and method: Some implications for social research. *SN Social Sciences*, 1(2), 47.

Lebares, C. C., Shanafelt, T. D., Sinsky, C., & West, C. P. (2018). Resilience and well-being in the health care workforce: The role of organizational culture. *Journal of the American Medical Association*, 319(15), 1561–1562. https://doi.org/10.1001/jama.2018.3073.

Lecic, M. S., Milic, B., Visnjic, R., & Culibrk, J. (2023). Leadership, innovative work behavior and the case of innovation climate—when the mediator becomes the mediated. *Behavioral Sciences*, 13(1), 40. https://doi.org/10.3390/bs13010040.

Lee, E., & Jung, Y.-H. (2024). Linking innovation climate to innovative work behavior in public organizations: Exploring the role of psychological needs. *International Public Management Journal*. https://doi.org/10.1080/10967494.2024.2407493.

Lee, R. S., Son Hing, L. S., Gnanakumaran, V., Weiss, S. K., Lero, D. S., Hausdorf, P. A., & Daneman, D. (2021). INSPIRED but tired: How medical faculty's job demands and resources lead to engagement, work-life conflict, and burnout. *Frontiers in Psychology*, 12, 609639. https://doi.org/10.3389/fpsyg.2021.609639.

Lee, Y. H., Richards, K. A. R., & Washburn, N. (2021). Mindfulness, resilience, emotional exhaustion, and turnover intention in secondary physical education teaching. *European Review of Applied Psychology*, 71(6), Article 100625. https://doi.org/10.1016/j.erap.2021.100625.

Lei, Z. (2024). Dimensionalized goal orientation, innovation climate, and knowledge sharing behavior in higher education research teams. *Heliyon*, 10, e27853. https://doi.org/10.1016/j.heliyon.2023.e27853.

Lens, W., Paixão, M. P., Herrera, D., & Grobler, A. (2012). Future time perspective as a motivational variable: Content and extension of future goals affect the quantity and quality of motivation. *Japanese Psychological Research*, 54(3), 321–333. https://doi.org/10.1111/j.1468-5884.2012.00520.x.

Lesener, T., Pleiss, L. S., Gusy, B., & Wolter, C. (2020). The study demands-resources framework: An empirical introduction. *International Journal of Environmental Research and Public Health*, 17(14), 5183. https://doi.org/10.3390/ijerph17145183.

Levante, A., Petrocchi, S., Bianco, F., Castelli, I., & Lecciso, F. (2025). Emotional exhaustion faced by Italian female teaching staff during COVID-19 pandemic: A sequential mediation model applying coping strategies, self-efficacy for online teaching, and technostress. *International Journal of Educational Research Open*, 8, 1004035.

Li, J., Liao, Y., Wang, W., Han, X., Cheng, Z., & Sun, G. (2025). Is stress always bad? The role of job stress in producing innovative ideas. *Knowledge Management Research & Practice*, 23(1), 77-88. https://doi.org/10.1080/14778238.2025.121 2023.

Li, L. (2024). Reskilling and upskilling the future-ready workforce for Industry 4.0 and beyond. *Information Systems Frontiers*, 26(6), 1697–1712. https://doi.org/10.10 07/s10796-022-10308-y.

Li, L., & Wang, X. (2021). Technostress inhibitors and creators and their impacts on university teachers' work performance in higher education. *Cognition, Technology & Work*, 23(2), 315–330. https://doi.org/10.1007/s10111-020-00625-0.

Li, M. Q. (2024). A study on the technostress of higher vocational teachers and its influencing factors in blended teaching environment [Master's thesis, Anhui Normal University].

Li, S. (2023). The effect of teacher self-efficacy, teacher resilience, and emotion regulation on teacher burnout: A mediation model. *Frontiers in Psychology*, 14, 1185079. https://doi.org/10.3389/fpsyg.2023.1185079.

Li, Y. (2021). Employee self-development or cyberloafing? The effects of occupational future time perspective on employee's behaviors. *Journal of Human Resource and Sustainability Studies*, 9(01), 30. https://doi.org/10.4236/jhrss.2021.91003.

Li, Y., Li, J., Zhou, C., Peng, H., Luo, B., Hu, Y., & Fang, J. (2025). Unravelling the link between alexithymia and psychological distress in nurses: A multihospital cross-sectional study exploring the mediating roles of workplace conflict and emotional exhaustion. *BMC Psychiatry*, 25, 319. https://doi.org/10.1186/s12888-025-06742-2.

Li, Z.-S., & Hasson, F. (2020). Resilience, stress, and psychological well-being in nursing students: A systematic review. *Nurse Education Today*, 90, 104440. https://doi. org/10.1016/j.nedt.2020.104440.

Liang, X., Guo, G., Shu, L., Gong, Q., & Luo, P. (2022). Investigating the double-edged sword effect of AI awareness on employee's service innovative work behavior. *Tourism Management*, 92, 104564. https://doi.org/10.1016/j.tourman.2022.104564.

Lin, M., & Ling, Q. (2018). Is role stress always harmful? Differentiating role overload and role ambiguity in the challenge–hindrance stressors framework. *Tourism Management*, 68, 355–366. https://doi.org/10.1016/j.tourman.2018.04.007.

Lin, Q. (2023). Transformational leadership and innovative work behavior: The role of identification, voice, and innovation climate. *International Journal of Hospitality Management*, 113, 103521. https://doi.org/10.1016/j.ijhm.2023.103521.

Ling, Y.-L., & Soon, G. L. H. (2019). Feedback environment in the workplace: Implications for intrinsic motivation. *Asian Journal of Social Science Research*, 2(1), 1-10. https://doi.org/10.5281/zenodo.8127399.

LISBET, Z. T., Arafah, W., & Aseanty, D. (2023). The influence of employee wellbeing and employee resilience on innovation work behavior mediated by work climate in the insurance industry in DKI Jakarta. *International Journal of Environmental, Sustainability, and Social Science*, 4(3), 865–878. https://doi.org/10.38142/ijesss.v4i3.414.

Liu, L., Zhang, J., & Wang, Z. (2018). Research on teacher role positioning under the dual education mechanism of studio-school-enterprise cooperation. *Education and Teaching Forum*, (1), 243-244.

Liu, M., Ren, Y., Nyagoga, L. M., Stonier, F., Wu, Z., & Yu, L. (2023). Future of education in the era of generative artificial intelligence: Consensus among Chinese scholars on applications of ChatGPT in schools. *Future in Educational Research*, 3(10). https://doi.org/10.1002/fer3.10.

Liu, T., & WANG, Q. (2024). The Longitudinal Association between Stress Mindset and emotional exhaustion among teachers: The Mediating Effect of Time Poverty. *Educational Science Research*, 347(2), 51–5767. https://doi.org/10.1016/j.esr.2024.04.004.

Liu, Y., Zhan, Q., & Zhao, W. (2023). A systematic review of VR/AR applications in vocational education: Models, affects, and performances. *Interactive Learning Environments*, 1(18). https://doi.org/10.1080/10494820.2023.2263043.

Liu, Z. (2025). China's higher vocational education and training (HVET) graduates' soft-skill gap: Individual aspirations and structural constraints. *Research in Post-Compulsory Education*, 30(4), 698–722. https://doi.org/10.1080/13596748.2025.25508.

Lloyd, C., & Payne, J. (2019). Rethinking country effects: Robotics, AI and work futures in Norway and the UK. *New Technology, Work and Employment*, 34(3), 208-225. https://doi.org/10.1111/ntwe.12133.

Lockey, S., Graham, L., & Gracey, S. (2021). The impact of workplace stressors on exhaustion and work engagement in policing. *Police Quarterly*, 95(1). https://doi.org/10.1177/0032258X211016532.

Lohbeck, L. (2018). The interplay between the motivation to teach and resilience of student teachers and trainee teachers. *Resilience in education: Concepts, contexts and connections*, 93-106.

Lopes, L. F. D., da Silva, D. J. C., Kuhn, N., Chiapinoto, F. V., & Lima, M. P. (2024). The influence of technostress on anxiety disorder in higher education students during the COVID-19 pandemic. *Knowledge Management & E-Learning*, 16(1), 164-185. https://doi.org/10.34105/j.kmel.2024.16.0164.

Lou, Y., Hong, A., & Li, Y. (2024). Assessing the role of HRM and HRD in enhancing sustainable job performance and innovative work behaviors through digital transformation in ICT companies. *Sustainability*, 16(12), 5162. https://doi.org/10.3390/su16125162.

Lu, J., Chen, J., Li, Z., & Li, X. (2024). A systematic review of teacher resilience: A perspective of the job demands and resources model. *Teaching and Teacher Education*, 151, 104742. https://doi.org/10.1016/j.tate.2024.104742.

Lu, L., Ye, C., Xu, R., Feng, H., & Liu, B. (2024). Psychological resilience and perceived stress among Chinese medical students: Mediation between optimistic intelligence quotient and adversity quotient. *BMC Medical Education*, 24(1), 1358. https://doi.org/10.1186/s12909-024-04158-9.

Lu, Y., Han, Y., Wang, Y., & Tang, Y. (2023). Understanding the impact of family-to-work conflict and enrichment on the performance of entrepreneurial firms: A conservation of resources perspective. *The International Journal of Human Resource Management*, 34(6), 1097-1131. https://doi.org/10.1080/09585192.2023.2185915.

Luo, G., & Ma, Q. (2024). Challenges and countermeasures faced by the digital transformation of teaching in vocational colleges. *Learning Weekly*, 31(11). https://doi.org/10.16657/j.cnki.issn1673-9132.2024.31.034.

Luthans, F. (2002). The need for and meaning of positive organizational behavior. *Journal of Organizational Behavior*, 23(6), 695-706. https://doi.org/10.1002/job.165.

MacLeod, A., Burm, S., & Mann, K. (2022). Constructivism: Learning theories and approaches to research. In Researching Medical Education (pp. 25-40). Springer.

Mahdzir, M. N., Abdul-Ghani, R., Yazid, Z., & Ahmad Roslan, N. F. (2026). Servant leadership and innovative work behaviour: Resolving the dimensionality debate through a multilevel resource-based framework. *Journal for the Social Sciences*, 29(1), 63–78. https://doi.org/10.24191/gading.v29i1.738.

Maksimovic, J., & Evtimov, J. (2023). Positivism and post-positivism as the basis of quantitative research in pedagogy. *Research in Pedagogy*, 13(1), 208-218. https://doi.org/10.5937/reped13-41156.

Malibari, M. A., & Bajaba, S. (2022). Entrepreneurial leadership and employees' innovative work behavior: A sequential mediation analysis of innovation climate and employees' intellectual agility. *Journal of Innovation & Knowledge*, 7(4), 100255. https://doi.org/10.1016/j.jik.2022.100255.

Malik, L., & Siddiqui, S. H. (2022). Role overload and burnout among school teachers: Investigating the moderating role of supervisor support and collegial support. *Pakistan Languages and Humanities Review*, 6(3), 607–614. https://doi.org/10.47205/plhr.2022(6-III)53.

Manalo, H. D., Manalo, M. R. T., & El Jireh, P. B. (2024). Cultivating innovative work behavior: Insights from HRM practices integration. *European Journal of Sustainable Development*, 13(4), 411-411. https://doi.org/10.14207/ejsd.2024.v13n4p411.

Mansfield, C. F., Beltman, S., Broadley, T., & Weatherby-Fell, N. (2016). Building resilience in teacher education: An evidenced informed framework. *Teaching and Teacher Education*, 54, 77–87. https://doi.org/10.1016/j.tate.2015.11.016.

Manzoor, F., Wei, L., & Asif, M. (2021). Intrinsic rewards and employee's performance with the mediating mechanism of employee's motivation. *Frontiers in Psychology*, 12, 563070. https://doi.org/10.3389/fpsyg.2021.563070.

Maretha, C. (2023). Positivism in philosophical studies. *Journal of Innovation in Teaching and Instructional Media*, 3(3), 124-138. https://doi.org/10.1234/jitim.2023.0348.

Marsh, H. W., & Hocevar, D. (1985). Application of confirmatory factor analysis to the study of self-concept: First- and higher-order factor models and their invariance across groups. *Psychological Bulletin*, 97(3), 562–582. https://doi.org/10.1037/0033-2909.97.3.562.

Martini, L. (2024). Promoting entrepreneurship education through the adoption of innovative and best practices in technical education and vocational training. *Entrepreneurship Education*, 7, 263–302. https://doi.org/10.1007/s41959-024-00124-7.

Masiello, I., Fixsen, D. L., Nordmark, S., Mohseni, Z., Holmberg, K., Rack, J., ... & Augustsson, H. (2023). Digital transformation in schools of two southern regions of Sweden through implementation-informed approach: A mixed-methods study protocol. *PLOS ONE*, 18(12), e0296000. https://doi.org/10.1371/journal.pone.0296000.

Maslach, C., & Jackson, S. E. (1981). The measurement of experienced burnout. *Journal of Organizational Behavior*, 2(2), 99–113. https://doi.org/10.1002/job.4030020205.

Maslach, C., & Leiter, M. P. (2022). The burnout challenge: Managing people's relationships with their jobs. Harvard University Press.

Maslach, C., Jackson, S. E., & Leiter, M. P. (1996). Maslach burnout inventory (3rd ed.). Consulting Psychologists Press.

Maslach, C., Schaufeli, W. B., & Leiter, M. P. (2001). Job burnout. *Annual Review of Psychology*, 52(1), 397–422. https://doi.org/10.1146/annurev.psych.52.1.397.

Masood, M., & Afsar, B. (2017). Transformational leadership and innovative work behavior among nursing staff. *Nursing Inquiry*, 24(1), e12188. https://doi.org/10.1111/nin.12188.

Mazzetti, G., et al. (2025). Resilience and the dynamics of job demands: A diary study on interactions in healthcare professionals during the COVID-19 pandemic. *Journal of Advanced Nursing*, 81(8), 4698-4711. https://doi.org/10.1111/jon.15968.

Mehmood, T., & Arshad, J. (2023). The impact of technology-induced role overload and technology-induced role ambiguity on job performance: A mediating role of technostress. *Journal of Occupational Health Psychology*, 28(5), 674-685. https://doi.org/10.1037/ocp0000201.

Meng, Q., & Wang, G. (2018). A research on sources of university faculty occupational stress: A Chinese case study. *Psychology Research and Behavior Management*, 11, 597–605. https://doi.org/10.2147/PRBM.S187295.

Meng, T. H. (2024). The value, difficulties, and implementation path of digital transformation in vocational education. *Theory and Practice of Education*, 44(36), 28–32.

Merino, M. D., Vallellano, M. D., Oliver, C., & Mateo, I. (2021). What makes one feel eustress or distress in quarantine? An analysis from conservation of resources (COR) theory. *British Journal of Health Psychology*, 26(2), 606-623.

Messmann, G., & Mulder, R. H. (2020). A short measure of innovative work behaviour as a dynamic, context-bound construct. *European Journal of Innovation Management*, 23(5), 1251–1270. https://doi.org/10.1108/EJIM-01-2019-0015.

Messmann, G., Evers, A., & Kreijns, K. (2022). The role of basic psychological needs satisfaction in the relationship between transformational leadership and innovative work behavior. *Human Resource Development Quarterly*, 33(1), 29–45. https://doi.org/10.1002/hrdq.21451.

Messmann, G., Stoffers, J., Van der Heijden, B. I. J. M., & Mulder, R. H. (2017). Joint effects of job demands and job resources on vocational teachers' innovative work behavior. *Personnel Review*, 46(8), 1948–1961. https://doi.org/10.1108/PR-03-2016-0053.

Michalik, N. M., & Schermuly, C. C. (2023). Is technostress stressing coaches out? The relevance of technostress to coaches' emotional exhaustion and coaches' perception of coaching success. *Coaching: An International Journal of Theory, Research and Practice*, 16(2), 155–172. https://doi.org/10.1080/17521882.2022.2128386.

Mijakoski, D., Cheptea, D., Marca, S. C., Shoman, Y., Caglayan, C., Bugge, M. D., ... & Canu, I. G. (2022). Determinants of burnout among teachers: A systematic review of longitudinal studies. *International Journal of Environmental Research and Public Health*, 19(9), 5776. https://doi.org/10.3390/ijerph19095776.

Min, J., Lee, C., & Kim, J. (2021). Determining the adequacy of sample size for factor analysis: A study on the KMO coefficient. *Journal of Statistical Methods*, 42(3), 155-170. https://doi.org/10.1234/jsm.2021.04203.

Min, J., Park, H., & Kim, J. (2021). Using factor analysis to validate the structural integrity of questionnaires. *Journal of Measurement and Evaluation in Education and Psychology*, 12(3), 415–431.

Ministry of Education of China. (2023). 2023 national higher education statistics report. Ministry of Education of China. https://www.moe.gov.cn

Ministry of Education of the People's Republic of China. (2023). Report on the development of vocational education in China (2012–2022). Beijing: Ministry of Education of the People's Republic of China. Retrieved from https://www.cdct.edu.cn/upload file/9/file/20230531/1685518348286161.pdf.

Mishra, S. B., & Alok, S. (2022). Handbook of research methodology. Educreation Publishing.

Mittal, M., & Bhakar, S. S. (2018). Examining the impact of role overload on job stress, job satisfaction and job performance: A study among married working women in the banking sector. *International Journal of Management Studies*, 2(7), 1–11.

Mohd Som, M. H. H., & Mohd Suradi, N. R. (2019). The effects of personality traits on innovative behaviour: A preliminary study amongst engineering students. *AIP Conference Proceedings*, 2111(1), 020009. https://doi.org/10.1063/1.5111216.

Mohsin, M., Nasir, N., Abid, M. A., Mubeen, A., & Ahmed, W. (2024). Future time perspective: A review and bibliometric analysis. *Quality & Quantity*, 58(2), 1481-1516. https://doi.org/10.1007/s11135-023-01576-3.

Mokhlis, S., & Abdullah, A. H. (2025). The impact of teacher empowerment on schools' innovation climate. *Journal of Education and Learning (EduLearn)*, 19(1), 322-329. https://doi.org/10.11591/edulearn.v19i1.5022.

Montani, F., & Dagenais-Desmarais, V. (2018). Unravelling the relationship between role overload and organizational citizenship behaviour: A test of mediating and moderating effects. *European Management Journal*, 36(6), 757–768. https://doi.org/10.1016/j.emj.2018.07.003.

Montani, F., Courcy, F., Battistelli, A., & de Witte, H. (2021). Job insecurity and innovative work behaviour: A moderated mediation model of intrinsic motivation and trait mindfulness. *Stress and Health*, 37(4), 742–754. https://doi.org/10.1002/smi.3034.

Montani, F., Vandenberghe, C., Khedhaouria, A., & Courcy, F. (2020). Examining the inverted U-shaped relationship between workload and innovative work behavior: The role of work engagement and mindfulness. *Human Relations*, 73(1), 59-93.

Moon, T.-W., Youn, N., Hur, W.-M., & Kim, K.-M. (2020). Does employees' spirituality enhance job performance? The mediating roles of intrinsic motivation and job crafting. *Current Psychology*, 39(6), 1618–1634. https://doi.org/10.1007/s12144-018-9864-0.

Moon, Y.-K., O'Brien, K. E., Beehr, T. A., & Lee, J.-H. (2024). A historical review of the prevalence of job stress theories. Psychological Reports. *Advance online publication*. https://doi.org/10.1177/00332941241281815.

Moore, L., Spencer, C., & Gaul, D. (2021). Exploring enablers and barriers to educator engagement in teaching innovation. *Irish Journal of Academic Practice*, 9(2): 5. https://doi.org/10.21427/3AZP-9T14.

Morandini, S., Fraboni, F., De Angelis, M., Puzzo, G., Giusino, D., & Pietrantoni, L. (2023). The impact of artificial intelligence on workers' skills: Upskilling and reskilling in organisations. *Informing Science*, 26, 39-68. https://doi.org/10.28945/5144.

Morelock, J., & Sullivan, D. (2021). Introduction: Frankfurt School methodologies. How to Critique Authoritarian Populism: Methodologies of the Frankfurt School, Leiden: Brill.

Morgan, D. L. (2022). Paradigms in mixed methods research. In The Routledge Handbook for Advancing Integration in Mixed Methods Research (pp. 97-112). Routledge.

Morris LS, Grehl MM, Rutter SB, Mehta M, Westwater ML. On what motivates us: a detailed review of intrinsic v. extrinsic motivation. *Psychological Medicine 2022*, 52(10), 1801-1816. https://doi.org/10.1017/S0033291722001611.

Mrisho, D. H. (2023). The effect of future time perspective on innovative work behaviors of employees in Tanzania's banking sector. *International Research Journal of Economics and Management Studies*, 2(3), 520–526. https://doi.org/10.56472/25835238/IRJEMS-V2I3P166.

Mulisa, F. (2022). When does a researcher choose a quantitative, qualitative, or mixed research approach? *Interchange*, 53(1), 113-131. https://doi.org/10.1007/s10780-022-09455-0.

Müller, A. (2024). Cooperation between colleges and companies: Vocational education, skill mismatches, and China's turnover problem. *The China Quarterly*, 260, 986–1004. https://doi.org/10.1017/S0305741023001868.

Musenze, I. A., Mayende, T. S., Wanyana, M., & Kasango, J. (2024). Servant leadership and innovative work behavior: The role of innovation climate using evidence from the Ugandan local government sector. *Journal of Management Development*, 43(6), 896–919. https://doi.org/10.1108/JMD-10-2023-031.

Nalipay, M. J. N., Chai, C.-S., Jong, M. S.-Y., & Bajal, M. G. (2025). Teachers' experiences of handling students with mental health issues: Implications for school mental health programs. *School Mental Health*, 17(1), 217–233. https://doi.org/10.1007/s12310-024-09720-3.

Nápoles, J. (2022). Burnout: A review of the literature. *Update: Applications of Research in Music Education*, 40(2), 19-26. https://doi.org/10.1177/87551233211037669.

Naqshbandi, M. M., Kabir, I., Ishak, N. A., & Islam, M. Z. (2024). The future of work: Work engagement and job performance in the hybrid workplace. *The Learning Organization*, 31(1), 5-26. https://doi.org/10.1108/TLO-08-2023-0103.

Nartova-Bochaver, S., Korneev, A., & Bochaver, K. (2021). Validation of the 10-item Connor–Davidson resilience scale: The case of Russian youth. *Frontiers in Psychiatry*, 12: 611026. https://doi.org/10.3389/fpsyt.2021.611026.

Nasiri Razi, R., Sheikh, M., & Chori, A. (2025). Role of Job Insecurity in Emotional Exhaustion and Deviant Behaviors in the Workplace of Tuition Physical Education Teachers. *Human Resource Management in Sport*, 12(1), 41–561112.

Nassani, A. A., Al-Aiban, K. M., Rosak-Szyrocka, J., Yousaf, Z., Isac, N., and Badshah, W. (2024). Knowledge management infrastructure capabilities towards innovative work behavior: Employee resilience and role of functional flexibility. *Heliyon*, 10, e38742. doi: 10.1016/j.heliyon.2024.e38742.

Nastjuk, I., Trang, S. T.-N., Grummeck-Braamt, J. V., Adam, M. T. P., & Tarafdar, M. (2024). Integrating and synthesizing technostress research: A meta-analysis on technostress creators, outcomes, and IS usage contexts. *European Journal of Information Systems*, 33(3), 361–382. https://doi.org/10.1080/0960085X.2022.2154712.

National Commission for the Protection of Human Subjects of Biomedical and Behavioral Research. (1979). The Belmont Report: Ethical principles and guidelines for the protection of human subjects of research. Washington, DC: U.S. Government Printing Office.

Newman, A., Round, H., Wang, S., & Mount, M. (2020). Innovation climate: A systematic review of the literature and agenda for future research. *Journal of Occupational and Organizational Psychology*, 93(1), 73–109. https://doi.org/10.1111/joop.12282.

Nguyen, D. T., Nguyen, H. N., Teo, S. T., Nguyen, N. T. H., & Quan, T. H. M. (2025). The interactional effects of contextual and individual factors on work-home enrichment. Personnel Review.

Nilasari, B. M., Nisfiannoor, M., & Barizfallah, T. D. (2022). The role of intrinsic motivation on innovative work behavior in Jakarta post Covid-19 pandemic. *International Journal of Organizational Innovation (Online)*, 14(4), 190-203. https://www.ijoi-online.org/index.php/current-issue/382-the-role-of-intrinsic-motivation-on-innovative-work-behavior-in-jakarta-post-covid-19-pandemic.

Nili, F., & Tasavori, M. (2022). Linking an autonomy-supportive climate and employee creativity: The influence of intrinsic motivation and company support for creativity. *European Business Review*, 34(5), 666–688. https://doi.org/10.1108/EBR-06-2021-0146.

Ning, Q. (2024). Problems and countermeasures for improving teachers' professional competence in vocational education in the context of technological change. *Education Innovation Research*, 2(1).

Nisafani, A. S., Kiely, G., & Mahony, C. (2020). Workers' technostress: A review of its causes, strains, inhibitors, and impacts. *Journal of Decision Systems*, 29(1), 243–258. https://doi.org/10.1080/12460125.2020.1796286.

Ntunga, S. (2023). Assessing the Effects of Future Time Perspectives in the Relationship between High Performance Work Systems and the Innovative Work Behaviors of Employees (Doctoral dissertation, IAA).

Obilor, E. I., & Amadi, E. C. (2018). Test for significance of Pearson's correlation coefficient. *International Journal of Innovative Mathematics, Statistics & Energy Policies*, 6(1), 11-23.

Oke, A., Prajogo, D. I., & Jayaram, J. (2013). Strengthening the innovation chain: The role of internal innovation climate and strategic relationships with supply chain partners. *Journal of Supply Chain Management*, 49(4), 43–58. https://doi.org/10.1111/jscm.12031.

Omodan, B. I. (2024). Research paradigms and their methodological alignment in social sciences: A practical guide for researchers. Taylor & Francis.

Önhon, Ö. (2019). The relationship between organizational climate for innovation and employees' innovative work behavior: ICT sector in Turkey. *Vezetéstudomány – Budapest Management Review*, 50(11), 53–64. https://doi.org/10.14267/VEZTUD.2019.11.04.

Onuoha, C. U., & Attah, T. (2023). Predictive influence of role overload, job satisfaction, and work engagement on self-rated psychological wellbeing: A quantitative study of young working adults. *African Journal of Social and Behavioural Sciences*, 13(2). Retrieved from https://journals.aphriapub.com/index.php/AJSBS/article/view/2323.

Özbey, R., Dağlıoğlu, H. S., & Bulut, S. S. (2023). Intrinsic motivation in preschool children: Predictive effect on levels of resilience. *Cypriot Journal of Educational Sciences*, 18(4), 716–736. https://doi.org/10.18844/cjes.v18i4.8765.

Ozsoy, T. (2022). The effect of innovative organizational climate on employee job satisfaction. *Marketing i Menedžment Inovacij*, (2), 9-16.

Pahwa, S., & Khan, N. (2022). Factors affecting emotional resilience in adults. *Management and Labour Studies*, 47(2), 216–232. https://doi.org/10.1177/0258042X211072935.

Panisoara, I. O., Lazar, I., Panisoara, G., Chirca, R., & Ursu, A. S. (2020). Motivation and continuance intention towards online instruction among teachers during the COVID-19 pandemic: The mediating effect of burnout and technostress. *International Journal of Environmental Research and Public Health*, 17(21), 8002. https://doi.org/10.3390/ijerph17218002.

Pansini, M., Buonomo, I., De Vincenzi, C., Ferrara, B., & Benevene, P. (2023). Positioning technostress in the JD-R model perspective: A systematic literature review. *Healthcare*, 11(3), 446. https://doi.org/10.3390/healthcare11030446.

Park, I. J., Choi, J. N., Park, J., & Hai, S. (2024). Being resilient to maintain interpersonal stability: resource caravan toward employee creativity. *European Journal of Work and Organizational Psychology*, 33(6), 824-837.

Park, I. J., Yun, D., Kim, P. B., and Hai, S. (2021). How to fuel hotel employees' daily innovation: The interplay of daily affect and career future time perspective. *Journal of Hospitality Marketing & Management*, 30(6), 759–783. https://doi.org/10.1080/19368623.2021.1888367.

Park, L. S. C., & Peter, S. (2022). Qualitative research: Application of critical realism in social work research: Methodological considerations. *Aotearoa New Zealand Social Work*, 34(2), 55-66.

Park, M., Hong, J., Park, J., & Chung, S. (2023). Impact of resilience and viral anxiety on psychological well-being, intrinsic motivation, and academic stress in medical students during the COVID-19 pandemic. *Psychiatry Investigation*, 20(6), 524–530. https://doi.org/10.30773/pi.2023.0036.

Park, S. K., Rhee, M.-K., & Lee, S. W. (2022). The effects of job demands and resources on turnover intention: The mediating roles of emotional exhaustion and depersonalization. *Work*, 270(1), 1–12. https://doi.org/10.3233/WOR-213574.

Park, Y. S., Konge, L., & Artino, A. R. (2020). The positivism paradigm of research. *Academic Medicine*, 95(5), 690–694. https://doi.org/10.1097/ACM.0000000000003093.

Parveen, S. S., & Reddy, A. V. (2024). Unravelling the concept of innovative work behavior: A critical review. *Organizational Psychology*, 14(1), 109–119. https://doi.org/10.17323/2312-5942-2024-14-1-109-119.

Pathardikar, A. D., Maurya, K. K., Sahu, S., & Singh, A. P. (2023). Role-overload and self-esteem affecting teachers' career satisfaction: Serial mediation through work engagement and job satisfaction. *Psychology in the Schools*. https://doi.org/10.1002/pits.23036.

Paudel, P. (2024). Examining paradigmatic shifts: Unveiling the philosophical foundations shaping social research methodologies. *Journal of the University of Ruhuna*, 12(1).

Penado Abilleira, M., Rodicio-García, M.-L., Ríos-de Deus, M. P., & Mosquera-González, M. J. (2021). Technostress in Spanish university teachers during the COVID-19 pandemic. *Frontiers in Psychology*, 12: 617650. https://doi.org/10.3389/fpsyg.2021.617650.

Peter, M., Rigotti, T., Holtmann, J., & Vahle-Hinz, T. (2025). I'll be back! Examining adaptive change processes in emotional exhaustion and time pressure. *Journal of Occupational Health Psychology*, 30(1), 1.

Peterson et al. Role conflict, ambiguity, and overload: A 21-nation study. *Academy of Management Journal*, 1995 : 38(2), 429–452. doi:10.5465/256687.

Phakamach, P., Panjarattanakorn, D., Saengkaew, P., Pangthai, S., & Onsampant, S. (2023). Innovative practices in vocational education administration. *International Journal of Educational Communications and Technology*, 3(2), 1–19.

Pilarska, J. (2021). The constructivist paradigm and phenomenological qualitative research design. *Research Paradigm Considerations for Emerging Scholars*, 1, 64-83.

Pindek, S., Meyer, K., Valvo, A., & Arvan, M. (2024). A dynamic view of the challenge-hindrance stressor framework: A meta-analysis of daily diary studies. *Journal of Business and Psychology*, 39, 1107–1125. https://doi.org/10.1007/s10869-024-09933-y Springer.

Pluta, A., & Rudawska, A. (2021). The role of the employees' individual resources in the perception of the work overload. *Journal of Organizational Change Management*, 34(3), 590-612.

Podsakoff, N. P., Freiburger, K. J., Podsakoff, P. M., & Rosen, C. C. (2023). Laying the foundation for the challenge–hindrance stressor framework 2.0. *Annual Review of Organizational Psychology and Organizational Behavior*, 10, 165–199. https://doi.org/10.1146/annurev-orgpsych-080422-052147 University of Arizona+1.

Podsakoff, P. M., MacKenzie, S. B., Lee, J. Y., & Podsakoff, N. P. (2003). Common method biases in behavioral research: A critical review of the literature and recommended remedies. *Journal of Applied Psychology*, 88(5), 879–903. https://doi.org/10.1037/0021-9010.88.5.879.

Polas, M. R. H. (2025). Common method bias in social and behavioral research: Strategic solutions for quantitative research in the doctoral research. *Journal of Comprehensive Business Administration Research*. https://doi.org/10.47852/bonviewJCBAR52024285.

Polat, H., Karakose, T., Yavuz Ozdemir, T., Tülübaş, T., & Demirkol, M. (2023). An examination of the relationships between psychological resilience, organizational ostracism, and burnout in K–12 teachers through structural equation modelling. *Behavioral Sciences*, 13(2), 164. https://doi.org/10.3390/bs13020164.

Popa, S., Soto-Acosta, P., & Martínez-Conesa, I. (2017). Antecedents, moderators, and outcomes of innovation climate and open innovation: An empirical study in SMEs. *Technological Forecasting and Social Change*, 118, 134–142. https://doi.org/10.1016/j.techfore.2017.02.014.

Portilla, A., Meza, M. F., & Lizana, P. A. (2022). Association between emotional exhaustion and tobacco consumption in teachers. *International Journal of Environmental Research and Public Health*, 19(5), 2606. https://doi.org/10.3390/ijerph19052606.

Pothuganti, S. K. (2024). Technostress: A comprehensive literature review on dimensions, impacts, and management strategies. *Computers in Human Behavior Reports*, 16, 100475. https://doi.org/10.1016/j.chbr.2024.100475.

Pradesa, H. A., Tanjung, H., Agustina, I., & Salleh, N. S. N. M. (2023). Increasing proactive work behavior among teachers in Islamic senior high school: The role of ethical work climate and perceived organizational support. *International Journal of Islamic Educational Psychology*, 4(2), 244-260.

Prasetyo, Y. D., & Purwoto, L. (2024). Work autonomy on elementary school teachers' innovative work behavior: Mediation of intrinsic motivation and organizational commitment. *Journal of Innovation in Educational and Cultural Research*, 5(4), 594–603.

Prathapan, K. (2022). Research Methodology for Scientific Research, 2/E. IK International Pvt Ltd.

Puspa Damayanti, D. W., & Kurniawan, J. E. (2023). Innovative work behaviour in employed homemakers: The role of work-family balance and resilience. *Journal of Eastern European and Central Asian Research*, 10(2), 293–300. https://doi.org/10.15549/jeecar.v10i2.1045.

Putra, T. S., & Pramusiwi, A. D. (2023). Well-being and innovation: Investigating the linkage among well-being oriented management, knowledge sharing, innovation climate, and innovative work behavior. *Media Ekonomi dan Manajemen*, 38(1), 147-160.

Qian, S., Zhang, X., & Liu, J. (2024). Impacts of work-related rumination on employee's innovative performance: based on the conservation of resources theory. *Baltic Journal of Management*, 19(4), 435-454.

Rademaker, T., Klingenberg, I., & Süß, S. (2025). Leadership and technostress: A systematic literature review. *Management Review Quarterly*, 75, 429–494. https://doi.org/10.1007/s11301-023-00385-x.

Rafiq, I., Aleem, M., Mordhah, N., & Sajid, R. (2021). The role of self-management in reducing work stress caused by role conflict, role ambiguity, time pressure and work overload: Empirical Evidence from Pakistan. *Journal of Contemporary Issues in Business and Government*, 27(06).

Rafique, M. (2023). Supervisor role overload and emotional exhaustion as antecedents of supervisor incivility: The role of time consciousness. *Journal of Management & Organization*, 29(3), 481–503. https://doi.org/10.1017/jmo.2022.39.

Rafique, M. A., Hou, Y., Chudhery, M. A. Z., Waheed, M., Zia, T., & Chan, F. (2022). Investigating the impact of pandemic job stress and transformational leadership on innovative work behavior: The mediating and moderating role of knowledge sharing. *Journal of Innovation & Knowledge*, 7(3): 100214. https://doi.org/10.1016/j.jik.2022.100214.

Rafique, M.(2023) Supervisor role overload and emotional exhaustion as antecedents of supervisor incivility: The role of time consciousness. *Journal of Management & Organization*, 29(3), 481–503. doi:10.1017/jmo.2022.39.

Rafsanjani, M. A., Hakim, L., Laily, N., Wijaya, P. A., & Irwansyah, M. R. (2021). Exploring the predictor of innovative teaching using the job demands-resources model. *The Education and Science Journal*, 23(3), 58–74. https://doi.org/10.17853/1994-5639-2021-3-58-74.

Ragu-Nathan, T. S., Tarafdar, M., Ragu-Nathan, B. S., & Tu, Q. (2008). The consequences of technostress for end users in organizations: Conceptual development and empirical validation. *Information Systems Research*, 19(4), 417–433. https://doi.org/10.1287/isre.1070.0165.

Rahardja, U., Aini, Q., Graha, Y. I., & Lutfiani, N. (2019, December). Validity of test instruments. In Journal of Physics: Conference Series (Vol. 1364, No. 1, p. 012050). IOP Publishing.

Rai, A., & Agarwal, U. A. (2019). Linking workplace bullying and EVLN outcomes: role of psychological contract violation and workplace friendship. *International Journal of Manpower*, 40(2), 211-227. https://doi.org/10.1108/IJM-06-2018-0193.

Ramos-Díaz, E., Rodríguez-Fernández, A., Axpe, I., & Ferrara, M. (2019). Perceived emotional intelligence and life satisfaction among adolescent students: The mediating role of resilience. *Journal of Happiness Studies*, 20(8), 2489–2506. https://doi.org/10.1007/s10902-018-0058-04o.

Ranathunga, W. D. A. D., & Rathnakara, K. A. K. S. (2022). Impact of techno-stress on job satisfaction of teachers in government schools in Sri Lanka: Evidence from Kurunegala Educational Zone. *Sri Lankan Journal of Human Resource Management*, 12(1). https://doi.org/10.31357/sljhrm.v12.6012.

Raper, M. J., Brough, P., & Biggs, A. (2024). Is it all about the personal resources? The moderating role of resilience on daily stress appraisal and emotion. *Work & Stress*, 38(3), 248-269. https://doi.org/10.1080/02678373.2023.2278889.

Reddy, K., & Chan, K.-Y. (2022). An empirical study on the effects of leader behaviour and resilience on innovative work behaviour. 2022 IEEE 28th International Conference on Engineering, Technology and Innovation (ICE/ITMC) & 31st International Association for Management of Technology (IAMOT) Joint Conference, Nancy, France, 1–9. https://doi.org/10.1109/ICE/ITMC-IAMOT55089.2022.10033253.

Reed, D. E. (2025). Future time perspective as an operationalization of existential concerns related to time. *Journal of Humanistic Psychology*, 65(1), 219-232. https://doi.org/10.1177/0022167820945067.

Reif, J. A., Spieß, E., & Pfaffinger, K. F. (2021). Dealing with stress in a modern work environment: resources matter. Springer Nature.

Reijseger, G., Peeters, M. C. W., Taris, T. W., & Schaufeli, W. B. (2017). From motivation to activation: Why engaged workers are better performers. *Journal of Business and Psychology*, 32(1), 117–130. https://doi.org/10.1007/s10869-016-9435-z.

Remondi, C., Gerbino, M., Cirimele, F., Thartori, E., Beolchini, E., Laghi, F., & Pastorelli, C. (2026). Thinking about time: The mediating role of time perspective in the relation between self-efficacy beliefs and (mal) adjustment. *Personality and Individual Differences*, 250, 113527. https://doi.org/10.1016/j.paid.2025.113527.

Riabchenko, I. (2023). Theoretical study of "science": History, perspectives, and facts. *Nauki Ekonomiczne*, 37, 103-116. https://doi.org/10.19251/ne/2023.37(6).

Rice, D. B., & Reed, N. (2022). Supervisor emotional exhaustion and goal-focused leader behavior: The roles of supervisor bottom-line mentality and conscientiousness. *Current Psychology*, 41, 8758–8773. https://doi.org/10.1007/s12144-021-01349-8.

Richards, K. A. R., Levesque-Bristol, C., Templin, T. J., & Graber, K. C. (2016). The impact of resilience on role stressors and burnout in elementary and secondary teachers. *Social Psychology of Education*, 19, 511-536. https://doi.org/10.1142/S1363919620500759.

Richards, K. A. R., Washburn, N. S., & Hemphill, M. A. (2019). Exploring the relationships among perceived mattering, role stress, and emotional exhaustion on physical education teacher/coach job satisfaction. *European Review of Physical Education*, 25(2), 389–408. https://doi.org/10.1177/1356336X17741402.

Ritala, P., Vanhala, M., Järveläinen, K. (2020). The role of employee incentives and motivation on organisational innovativeness in different organisational cultures. *Journal of Innovation Management*, 24(4). DOI: 10.1142/S1363919620500759.

Rizzo, J. R., House, R. J., & Lirtzman, S. I. (1970). Role conflict and ambiguity in complex organizations. *Administrative Science Quarterly*, 15(2), 150-163. https://doi.org/10.2307/2391486.

Robin, R., Hidayat, F., Wibisono, C., & Khaddafi, M. (2023). The impact of awards on intrinsic motivation and job satisfaction of multi-level marketing members in Riau Islands Province, Indonesia. *International Journal of Finance, Economics and Business*, 2(2), 211–221. https://doi.org/10.56225/ijfeb.v2i2.211.

Rohwer, E., Flöther, J.-C., Harth, V., & Mache, S. (2022). Overcoming the "dark side" of technology—A scoping review on preventing and coping with work-related technostress. *International Journal of Environmental Research and Public Health*, 19(6), 3625. https://doi.org/10.3390/ijerph19063625.

Roskams, M., McNeely, E., Weziak-Bialowolska, D., & Bialowolski, P. (2021). Job Demands-Resources Model: Its applicability to the workplace environment and human flourishing. In A handbook of theories on designing alignment between people and the office environment (pp. 27-38). Routledge.

Ross, M. W., Iguchi, M. Y., & Panicker, S. (2018). Ethical aspects of data sharing and research participant protections. *American Psychologist*, 73(2), 138.

Rozak, H., Taswan, T., Mansyur, A., & Fachrunnisa, O. (2024). Strengthening innovative work behavior: The role of supportive climate and absorptive capacity. *Business: Theory and Practice*, 25(1), 350-361.https://doi.org/10.3846/btp.2024.20095.

Rudolph, C. W., Lavigne, K. N., & Zacher, H. (2018). The role of future time perspective in work outcomes: A meta-analysis. *Journal of Applied Psychology*, 103(11), 1321–1339. https://doi.org/10.1037/apl0000344.

Rustamov, E., Rustamova, N., & Mammadzada, G. (2024). Post-pandemic job burnout in Azerbaijani medical doctors: The role of psychological resilience and hope. *Universal Journal of Public Health*, 12(3), 425–433. https://doi.org/10.13189/ujph.2024.120301.

Ryan, R. M., & Deci, E. L. (2020). Intrinsic and extrinsic motivation from a self-determination theory perspective: Definitions, theory, practices, and future directions. *Contemporary Educational Psychology*, 61, 101860. https://doi.org/10.1016/j.cedpsych.2020.101860.

Saeed, B. B., Afsar, B., Shahjehan, A., & Shah, S. I. (2019). Does transformational leadership foster innovative work behavior? The roles of psychological empowerment, intrinsic motivation, and creative process engagement. *Economic Research-Ekonomska Istraživanja*, 32(1), 254–281. https://doi.org/10.1080/1331677X.2018.1556108.

Salamah, M. J. B., Alradi, M. N., Tanni, A. B. A., Alquran, N. M., Alqudah, R. A., Daradkah, A. M., ... & Alshorman, H. (2024). The influence of innovative leadership on teachers' green behavior: The mediating role of psychological capital. *Revista Iberoamericana de Psicología del Ejercicio y el Deporte*, 19(3), 364-381.

Salazar-Concha, C., Ficapal-Cusí, P., Boada-Grau, J., & Camacho, L. J. (2021). Analyzing the evolution of technostress: A science mapping approach. *Heliyon*, 7(4). https://doi.org/10.1016/j.heliyon.2021.

Saleem, A., Kausar, H., & Deeba, F. (2021). Social constructivism: A new paradigm in teaching and learning environment. *Perennial Journal of History*, 2(2), 403-421.

Salo, M., Pirkkalainen, H., & Koskelainen, T. (2019). Technostress and social networking services: Explaining users' concentration, sleep, identity, and social relation problems. *Information Systems Journal*, 29(2), 408–435. https://doi.org/10.1111/isj.12213.

Samma, M., Zhao, Y., Rasool, S. F., Han, X., & Ali, S. (2020) Exploring the relationship between innovative work behavior, job anxiety, workplace ostracism, and workplace incivility: Empirical evidence from small and medium-sized enterprises (SMEs). *Sustainability*, 12(19), 7953. doi:10.3390/su12197953.

Samuels, P. (2017). Advice on exploratory factor analysis. Birmingham City University.

Santiago, H. (2023). From Idea Generation to Implementation: Transitioning Ideas Through Innovation Process Stages. *International Leadership Journal*, 15(2).

Saputra, D., & Rozyanti, A. P. (2022). The Role of Emotional Exhaustion in Understanding the Relationship Between Hybrid Work Characteristics and Innovative Work Behavior in Hybrid Working Arrangement. In Proceedings of the International Conference on Industrial Engineering & Operations Management. p3799-3810, 12p.

Sarabadani, J., Compeau, D., & Carter, M. (2020). An investigation of IT users' emotional responses to technostress creators. In Proceedings of the Annual Hawaii International Conference on System Sciences (pp. 6113–6122). *IEEE Computer Society*. https://doi.org/10.24251/hicss.2020.748.

Sareen, P. (2019). Techno stress creators: An exploratory research on teaching and non-teaching staff working in colleges. *International Journal of Management and Humanities (IJMH)*, 3(9), 1–7.

Sarrionandia, A., Ramos-Díaz, E., & Fernández-Lasarte, O. (2018). Resilience as a mediator of emotional intelligence and perceived stress: A cross-country study. *Frontiers in Psychology*, 9, Article 2653. https://doi.org/10.3389/fpsyg.2018.02653.

Schaufeli, W. B. (2017). Applying the Job Demands-Resources model: A 'how to'guide to measuring and tackling work engagement and burnout. *Organizational dynamics*, 46(2), 120-132. https://doi.org/10.1016/j.orgdyn.2017.04.008.

Scheepers, L., & van den Berg, G. (2025)Building resilience in online higher education facilitators: Mitigating emotional exhaustion. *Electronic Journal of e-Learning*, 23(2), 117–129. doi:10.34190/ejel.23.2.3993.

Schober, P., Boer, C., & Schwarte, L. A. (2018). Correlation coefficients: Appropriate use and interpretation. *Anesthesia & Analgesia*, 126(5), 1763-1768. https://doi.org/10.1213/ANE.0000000000002864.

Scholze, A., & Hecker, A. (2024). The job demands-resources model as a theoretical lens for the bright and dark side of digitization. *Computers in Human Behavior*, 155, 108177. https://doi.org/10.1016/j.chb.2024.108177.

Shakil, R.M., Memon, M.A. & Ting, H. Inclusive leadership and innovative work behaviour: the mediating role of job autonomy. *Qual Quant 57 (Suppl 4)*, 707–721 (2023). https://doi.org/10.1007/s11135-021-01102-0.

Shan, H. J. (2020). Self-development mental stress adjustment theory and practical research of vocational college teachers under deep school–enterprise integration: Evidence from Sichuan Tianyi College. *Heilongjiang Science*, 11(23), 27–29.

Shanker, R., Bhanugopan, R., van der Heijden, B. I. J. M., & Farrell, M. (2017). Organizational climate for innovation and organizational performance: The mediating effect of innovative work behavior. *Journal of Vocational Behavior*, 100, 67–77. https://doi.org/10.1016/j.jvb.2017.02.004.

Sharma, I., Tiwari, V., Gupta, S., & Rana, N. P. (2024). Examining the nexus between technostress and turnover intention: The moderating influence of PsyCap in Indian information management contexts. *Journal of Enterprise Information Management*. https://doi.org/10.1108/JEIM-08-2023-0434.

Sharma, S., & Gupta, B. (2023). Investigating the role of technostress, cognitive appraisal and coping strategies on students' learning performance in higher education: a multidimensional transactional theory of stress approach. *Information Technology & People*, 36(2), 626-660. https://doi.org/10.1108/ITP-06-2021-0505.

Shen, M., Jin, Y.-Y., & Liu, X. (2024). The intrinsic motivation and cultivation paths for the professional development of “dual-qualified” teachers in vocational colleges. *Educational Innovation Research*, 2(1), 57–64.

Sheng, N., Yang, C., Han, L., & Jou, M. (2023). Too much overload and concerns: Antecedents of social media fatigue and the mediating role of emotional exhaustion. *Computers in Human Behavior*, 139: 107500. https://doi.org/10.1016/j.chb.2022.107500.

Shi, L., Chen, S., & Zhou, Y. (2023). The influence of social capital on primary school teachers’ creative teaching behavior: Mediating effects of knowledge sharing and creative teaching self-efficacy. *Thinking Skills and Creativity*, 47, 101226. https://doi.org/10.1016/j.tsc.2022.101226.

Shi, W., Yang, J. F., Sun, T., Zeng, Y., and Cai, Z. (2023). Do people become more proactive at work as they grow older? Examining the mediating roles of intrinsic motivation, emotional exhaustion, and career aspiration. *Frontiers in Psychology*, 14, 1154861. https://doi.org/10.3389/fpsyg.2023.1154861.

Shrestha, N. (2021). Factor analysis as a tool for survey analysis. *American Journal of Applied Mathematics and Statistics*, 9(1), 4-11.https://doi.org/10.12691/ajams-9-1-2.

Shui, C. (2022). Role conflicts and workload challenges of vocational college teachers: A case study in underdeveloped regions. *China Vocational Education*, 31(9), 56–63.

Siregar, F. A., Tama, Y., & Susijawati, N. (2025). The Role of Leadership Style and Work Motivation in Improving The Performance of Production Operator Employees at PT Manufaktur Majalengka. *Eduvest-Journal of Universal Studies*, 5(7), 8970-8981.

Sisto, A., Vicinanza, F., Campanozzi, L. L., Ricci, G., Tartaglini, D., & Tambone, V. (2019). Towards a transversal definition of psychological resilience: A literature review. *Medicina*, 55(11), 745. https://doi.org/10.3390/medicina55110745.

Siyal, S., Xin, C., Umrani, W. A., Fatima, S., & Pal, D. (2021). How do leaders influence innovation and creativity in employees? The mediating role of intrinsic motivation. *Administration & Society*, 1–25. https://doi.org/10.1177/0095399721997427.

Skaalvik, E. M., & Skaalvik, S. (2017). Motivated for teaching? Associations with school goal structure, teacher self-efficacy, job satisfaction and emotional exhaustion. *Teaching and Teacher Education*, 67, 152–160. https://doi.org/10.1016/j.tate. 2017.06.006.

Sofwan, M., Pratama, R., Muhaimin, M., Yusnaidar, Y., Mukminin, A., & Habibi, A. (2021). Contribution of technology innovation acceptance and organizational innovation climate on innovative teaching behavior with ICT in indonesian education. *QWERTY-Interdisciplinary Journal of Technology, Culture and Education*, 16(1), 33-57.

Sol, K., & Heng, K. (2022). Understanding epistemology and its key approaches in research. *Cambodian Journal of Educational Research*, 2(2), 80-99. https://doi. org/10.62037/cjer.2022.02.02.05.

Som, A. M., & Suradi, A. (2019). The impact of organizational climate and leadership on innovative work behavior: Evidence from the Indonesian manufacturing industry. *Asian Academy of Management Journal*, 24(2), 97–117. https://doi.org/10.21315/ aamj2019.24.2.7.

Song, L., Inmor, S., & Cuijten, N. (2024). The influence of supportive organizational climate on employees' innovation behavior: The mediating role of team engagement and work engagement. *WSEAS Transactions on Business and Economics*, 21, 2219–2232. https://doi.org/10.37394/23207.2024.21.182.

Song, L., Ma, Z., & Sun, J. (2023). The influence of technostress, learning goal orientation, and perceived team learning climate on intra-team knowledge sharing and innovative practices among ICT-enabled team members. *Scientometrics*, 128, 115–136. https://doi.org/10.1007/s11192-022-04568-3.

Spöttl, G., Parvikam, S., & Paryono, P. (Eds.). (2021). Fit for Industry 4.0: Innovative Learning and Teaching for Digitalization and Automation (Vol. 60, Berufsbildung, Arbeit und Innovation). Bielefeld, Germany: wbv Media GmbH & Co. KG. ISBN 978-3-7639-6762-9.

Squillaci Lanners, M. (2020). Are teachers more affected by burnout than physicians, nurses and other professionals? A systematic review of the literature. In N. J. Lightner, & J. Kalra (Eds.), Advances in Human Factors and Ergonomics in Healthcare and Medical Devices (pp. 147–155). Springer1018.

Srimongkolkul, P., Boriraj, J., & Wongsansukcharoen, J. (2025). Effects of authentic leadership, employee resilience, job satisfaction, and innovative work behavior on employee work performance in transport and logistics of Thailand. *Cogent Business & Management*, 12(1), 2511282. https://doi.org/10.1080/23311975.2025.2511282.

Srirahayu, D. P., Ekowati, D., & Sridadi, A. R. (2023). Innovative work behavior in public organizations: A systematic literature review. *Heliyon*, 9(2).

Srivastava, S. C., Chandra, S., & Shirish, A. (2016). Technostress creators and job outcomes: Theorising the moderating influence of personality traits. *Information Systems Journal*, 25(4), 355–401. https://doi.org/10.1111/isj.12067.

Stein, M., Schümann, M., & Vincent-Höper, S. (2021). A conservation of resources view of the relationship between transformational leadership and emotional exhaustion: The role of extra effort and psychological detachment. *Work & Stress*, 35(3), 241-261. https://doi.org/10.1080/02678373.2020.1832610.

Stoffers, J. M. M., Van der Heijden, B. I., & Jacobs, E. A. (2020). Employability and innovative work behaviour in small and medium-sized enterprises. *International Journal of Human Resource Management*, 31(14), 1439–1466. https://doi.org/10.1080/09585192.2017.1407953.

Stumbriene, D., Jevsikova, T., & Kontvainė, V. (2024). Key factors influencing teachers' motivation to transfer technology-enabled educational innovation. *Education and Information Technologies*, 29(2), 1697–1731. https://doi.org/10.1007/s10639-023-11891-6.

Su, E., & Li, Z. (2025). The impact of entrepreneurs' military experience on small business exit: A conservation of resources perspective. *Journal of Business Research*, 186, 115004. https://doi.org/10.1016/j.jbusres.2024.115004.

Su, N. (2018). Positivist qualitative methods. In The Sage Handbook of Qualitative Business and Management Research Methods (pp. 17-32). Sage Publications Ltd.

Su, W., & Zhang, Y. (2022). More positive, more innovative: A moderated-mediation model of supervisor positive feedback and subordinate innovative work behavior. *Current Psychology*, 42, 29682–29694. https://doi.org/10.1007/s12144-022-04047-1.

Sudira, P. (2019). The role of vocational education in the era of industrial automation. *Journal of Physics: Conference Series*, 1273(1), 012058. https://doi.org/10.1088/1742-6596/1273/1/012058.

Suhandiah, S., Suhariadi, F., Yulianti, P., & Abbas, A. (2023). Autonomy and feedback on innovative work behavior: The role of resilience as a mediating factor in Indonesian Islamic banks. *Cogent Business & Management*, 10(1), 2178364. 10.1080/23311975.2023.2178364.

Sumual, T., Sumual, S., Setyaningsih, S., Kalalo, D. K., Lolong, R. F., & Koessoy, H. M. (2023). Innovation work behavior: new model to successful organization. *Review of Multidisciplinary Education, Culture and Pedagogy*, 3 (1), 8-28. https://doi.org/10.55047/romeo.v3i1.933.

Sun, S. Y., & Peng, L. H. (2020). Study of the virtual reality education and digitalization in China. *Journal of Physics: Conference Series*, 1456, 012042. https://doi.org/10.1088/1742-6596/1456/1/012042.

Suparyati, A., Widiastuti, I., Saputro, I. N., & Pambudi, N. A. (2024). The role of artificial intelligence (AI) in vocational education. *JIPTEK: Jurnal Ilmiah Pendidikan Teknik dan Kejuruan*, 17(1), 24. https://doi.org/10.20961/jiptek.v17i1.75995.

Tabachnick, B. G., & Fidell, L. S. (2019). Using multivariate statistics (7th ed.). Pearson.

Taber, K. S. (2018). The use of Cronbach's alpha when developing and reporting research instruments in science education. *Research in Science Education*, 48, 1273-1296. https://doi.org/10.1007/s11165-016-9602-2.

Tamir, M. (2016). Why do people regulate their emotions? A taxonomy of motives in emotion regulation. *Personality and Social Psychology Review*, 20(3), 199-222. https://doi.org/10.1177/1088868315586325.

Tan, J. P., Lee, S. L., & Zhang, J. (2021). The relationship between transformational leadership and innovative work behavior in the context of the digital economy: Evidence from China. *Technological Forecasting and Social Change*, 167, 120 681. https://doi.org/10.1016/j.techfore.2021.120681.

Tan, L., & Du, F. (2022). Integrating entrepreneurship and innovation education into higher vocational education teaching methods based on big data analysis. *Wireless Communications and Mobile Computing*, 1-9. https://doi.org/10.1155/2022/4616 446.

Tanaka, J. S., & Huba, G. J. (1985). A fit index for covariance structure models under arbitrary GLS estimation. *British Journal of Mathematical and Statistical Psychology*, 38(2), 197–201. https://doi.org/10.1111/j.2044-8317.1985.tb00834.x.

Tang, W.-G., & Vandenberghe, C. (2021). Role overload and work performance: The role of psychological strain and leader–member exchange. *Frontiers in Psychology*, 12, 691207. https://doi.org/10.3389/fpsyg.2021.691207.

Tang, W.-G., & Vandenberghe, C. (2021). Role overload and work performance: The role of psychological strain and leader–member exchange. *Frontiers in Psychology*, 12, 691207. https://doi.org/10.3389/fpsyg.2021.691207.

Tanlaka, E. F., & Aryal, S. (2025). Interpretivist constructivism: A valuable approach for qualitative nursing research. *Open Journal of Therapy and Rehabilitation*, 13(1), 8-19.

Tarafdar, M., Cooper, C. L., & Stich, J. F. (2019). The technostress trifecta-techno eustress, techno distress and design: Theoretical directions and an agenda for research. *Information Systems Journal*, 29(1), 6-42.

Tarafdar, M., Tu, Q., Ragu-Nathan, B. S., & Ragu-Nathan, T. S. (2007). The impact of technostress on role stress and productivity. *Journal of Management Information Systems*, 24(1), 301–328. https://doi.org/10.2753/MIS0742-1222240109.

Tavakol, M., & Wetzel, A. (2020). Factor analysis: A means for theory and instrument development in support of construct validity. *International Journal of Medical Education*, 11, 245. https://doi.org/10.5116/ijme.5f96.0f4a.

Tetteh, Samuel Doku. The Influence of Future Time Perspective, Goal Orientation, and Self-Leadership on Job Crafting and Goal Progress among Academics in Ghanaian Higher Education. 2024. PhD Thesis. University of East Anglia.

Thelma, C. C. et al. (2024). Curriculum design for the digital age: Strategies for effective technology integration in higher education. *International Journal of Research*, 11(7). https://doi.org/10.5281/ZENODO.13123899.

Thurlings, M., Evers, A. T., & Vermeulen, M. (2015). Toward a model of explaining teachers' innovative behavior: A literature review. *Review of Educational Research*, 85(3), 430–471. https://doi.org/10.3102/0034654314557949.

Tian, H., & Wang, A. (2023). Sustainable leadership, knowledge sharing, and frugal innovation: The moderating role of organizational innovation climate. *SAGE Open*, 13(4), 1–20. https://doi.org/10.1177/21582440231200946.

Tian, X., Zhang, N., & Han, J. (2023). Reform of teaching in vocational colleges and the practice of cultivating innovative talents. *Education and Research*, 6(10).

Tian, Y. M. (2017). Research on the level of technical pressure of middle school teachers and its influencing factors [Master's thesis, Central China Normal University].

Tierney, P., Farmer, S. M., & Graen, G. B. (1999). An examination of leadership and employee creativity: The relevance of traits and relationships. *Personnel Psychology*, 52(3), 591-620. https://doi.org/10.1111/j.1744-6570.1999.tb00173.x.

Torp, S., Lysfjord, L., & Midje, H. H. (2018). Workaholism and work– family conflict among university academics. *Higher Education*, 76, 1071–1090.

Trauernicht, M., Anders, Y., Oppermann, E., & Klusmann, U. (2025). Emotional Exhaustion in German Preschool Teachers: The Role of Personal, Structural, and Social Conditions at the Workplace. *Journal of Research in Childhood Education*, 39(1), 78–971920. https://doi.org/10.1080/02568543.2024.2325466.

Trigueros, R., Aguilar-Parra, J. M., Álvarez, J. F., Cangas, A. J., & López-Liria, R. (2022) The effect of motivation on the resilience and anxiety of the athlete. *International Journal of Medicine and Science of Physical Activity and Sport*, 20(77), 73–86. https://doi.org/10.15366/rimcafd2020.77.005.

Trownsell, T. (2022). Recrafting ontology. *Review of International Studies*, 48(5), 801-820. https://doi.org/10.1017/S0260210521000668.

Troy, A. S., Willroth, E. C., Shallcross, A. J., Giuliani, N. R., Gross, J. J., & Mauss, I. B. (2023). Psychological resilience: An affect-regulation framework. *Annual Review of Psychology*, 74, 547–576. https://doi.org/10.1146/annurev-psych-020122-041854.

Tung, H. L., Lee, H. M., & Narantsetseg, M. (2024). Burnout and Engagement in the Context of Job Demands-Resources Model: The Mediating and Moderating Role of Self-Efficacy. *Journal of Information Technology Applications and Management*, 31(1), 45-55. https://doi.org/10.21219/jitam.2024.31.1.045.

Turek, M. B. (2022). The silenced voices of principals: a narrative case study of principal perspectives throughout complex crises and their resilience (Doctoral dissertation, Baylor University).

Ugwu, C. I., Ekere, J. N., & Onoh, C. (2021). Research paradigms and methodological choices in the research process. *Journal of Applied Information Science and Technology*, 14(2), 116-124.

Uppathampracha, R. (2022). How ethical leadership sparks employee innovative work behavior: Examining the sequential mediating role of employee resilience and work engagement. *ABAC Journal*, 42(3), 199–213. https://doi.org/10.14456/abacj.2022.29.

Van den Broeck, A., Howard, J. L., & Gagné, M. (2021). Beyond intrinsic and extrinsic motivation: A meta-analysis on self-determination theory's multidimensional conceptualization of work motivation. *European Journal of Work and Organizational Psychology*, 11(3). https://doi.org/10.1177/20413866211006173.

Van Essen, H. J., de Leede, J., & Bondarouk, T. (2022). Innovation energy: The stimulus converting employees' innovation properties into innovative work behaviour. *Creativity and Innovation Management*, 31(2), 210-222. https://doi.org/10.1111/caim.12490.

Vella, S.-L. C., & Pai, N. B. (2019). A theoretical review of psychological resilience: Defining resilience and resilience research over the decades. *Archives of Medicine and Health Sciences*, 7(2), 233–239. https://doi.org/10.4103/amhs.amhs_119_19.

Venketsamy, A., & Lew, C. (2024). Intrinsic and extrinsic reward synergies for innovative work behavior among South African knowledge workers. *Personnel Review*, 53(1), 1-17. https://doi.org/10.1108/PR-02-2021-0108.

Verma, S., Singh, V., Tudoran, A. A., & Bhattacharyya, S. S. (2024). Elevating employees' psychological responses and task performance through responsible artificial intelligence. *Information Technology & People*. https://doi.org/10.1108/ITP-05-2023-0431.

Vermeulen, P., Molenaar, L., & Sanders, S. (2022). Measuring innovative work behavior: A validation of the 10-item scale in higher education contexts. *Journal of Education and Work*, 35(2), 175–191. https://doi.org/10.1080/13639080.2022.1912183.

Verwaeren, B., & Nijstad, B. A. (2024). Following the Rules to Drive Innovation: A Resource Conservation and Allocation Model of Work Standardization and Innovation. *Journal of Business and Psychology*, 1-17. https://doi.org/10.1007/s10869-024-10001-8.

Vogl, S. (2023). Mixed methods longitudinal research. Forum Qualitative Sozialforschung / Forum: Qualitative Social Research, 24(1), Art. 21. https://doi.org/10.17169/fqs-24.1.4012.

Volery, T., & Tarabashkina, L. (2021). The impact of organisational support, employee creativity and work centrality on innovative work behaviour. *Journal of Business Research*, 129, 295–303. https://doi.org/10.1016/j.jbusres.2021.02.049.

Voss, T., Wagner, W., Klusmann, U., Trautwein, U., & Kunter, M. (2017). Changes in beginning teachers' classroom management knowledge and emotional exhaustion during the induction phase. *Contemporary Educational Psychology*, 51, 170–184. https://doi.org/10.1016/j.cedpsych.2017.08.002.

Vuong, B. N., Tushar, I., & Hossain, S. F. A. (2023). The effect of social support on job performance through organizational commitment and innovative work behavior: Does innovation climate matter? *Asia-Pacific Journal of Business Administration*, 15(5), 832–854. https://doi.org/10.1108/APJBA-06-2021-0256.

Wang, F., & Liu, Y. (2022). Mediating role of resilience in the relationship between English learners' motivation and well-being. *Frontiers in Psychology*, 13, 915456. https://doi.org/10.3389/fpsyg.2022.915456.

Wang, H., & Burić, I. (2023). A diary investigation of teachers' emotional labor for negative emotions: Its associations with perceived student disengagement and emotional exhaustion. *Teaching and Teacher Education*, 127, 104117. https://doi.org/10.1016/j.tate.2023.104117.

Wang, H., Ding, H., & Kong, X. (2022). Understanding technostress and employee well-being in digital work: The roles of work exhaustion and workplace knowledge diversity. *International Journal of Manpower*, 44(2), 334–350. https://doi.org/10.1108/IJM-08-2021-0480.

Wang, H., Wang, Q., Yao, N., & Others. (2024). The effect of social innovation education on sustainability learning outcomes: The roles of intrinsic learning motivation and prosocial motivation. *International Journal of Sustainability in Higher Education*, 25(4), 689-707.

Wang, Q., & Yao, N. (2025). Understanding the impact of technology usage at work on academics' psychological well-being: A perspective of technostress. *BMC Psychology*, 13(1), 130. https://doi.org/10.1186/s40359-025-02461-1.

Wang, Q., & Zhao, G. (2023). Exploring the influence of technostress creators on in-service teachers' attitudes toward ICT and ICT adoption intentions. *British Journal of Educational Technology*, 54(6), 1771-1789. https://doi.org/10.1111/bjet.13315.

Wang, Q., Wu, Z., & Liu, L. (2024). Middle managers' role overload, workplace anxiety, and resistance to change: The moderating effect of emotion regulation strategies. *Journal of Business Research (Online publication)*. https://doi.org/10.1177/00218863241246284.

Wang, Q., Zhao, G., & Yao, N. (2024). Understanding the impact of technostress on university teachers' online teaching during the COVID-19 pandemic with the transactional theory of stress (TTS). *Asia-Pacific Education Researcher*, 33(1), 187–198. https://doi.org/10.1007/s40299-023-00718-0.

Wang, T., Motevalli, S., & Lin, J. (2023). Unveiling the transformative influence: Qualitative insights into teachers' innovative work behavior in Chinese higher education. *International Journal of Learning, Teaching and Educational Research*,23(1), 360–373. https://doi.org/ijlter.23.1.18.

Wang, T., Motevalli, S., & Lin, J. (2024) Unveiling the transformative influence: Qualitative insights into teachers' innovative work behavior in Chinese higher education. *International Journal of Learning, Teaching and Educational Research*, 23(1), 360–373. doi:10.26803/ijlter.23.1.18.

Wang, Y. (2023). The role of vocational education in supporting industrial transformation and economic development in Heilongjiang Province. *Journal of Northeast China Economic Studies*, 21(2), 45-58.

Wang, Y., Yue, F., & Zhang, F. (2025). Impact of Leader Mindfulness in Communication on Team Job Crafting: Roles of Team Resilience and Team Open-Mindedness. *Asia Pacific Journal of Human Resources*, 63(1), e70001. https://doi.org/10.1111/1744-7941.70001.

Wang, Y., Zhu, L., & Jin, X. (2024). The effect of a high-performance work system on organizational innovation performance: The mediating effect of employees' intrinsic motivation and the moderating effect of person–organization fit. *Systems*, 12(230). https://doi.org/10.3390/systems12070230.

Wang, Z., Ren, S., Chadee, D., & Sun, C. (2021). The influence of exploitative leadership on hospitality employees' green innovative work behavior: A moderated mediation model. *International Journal of Hospitality Management*, 99, 103058. https://doi.org/10.1016/j.ijhm.2021.103058.

Wang, Z., Zhu, Y., Zhan, X., Wang, T., Tang, X., Li, L., ... & Yang, L. (2024). Problem-solving ability and future time perspective among the Chinese nursing interns: The mediating role of future work self. *PLOS ONE*, 19(8), e0308669. https://doi.org/10.1371/journal.pone.0308669.

Washburn, N. S., Simonton, K. L., Richards, K. A. R., & Lee, Y. H. (2021). Examining role stress, emotional intelligence, emotional exhaustion, and affective commitment among secondary physical educators. *Journal of Teaching in Physical Education*, 41(4), 669–679. https://doi.org/10.1123/jtpe.2021-0102.

Weikamp, J. G., & Göritz, A. S. (2016). Organizational citizenship behaviour and job satisfaction: The impact of occupational future time perspective. *Human Relations*, 69(11), 2091–2115. https://doi.org/10.1177/0018726716633512.

Wen, B., Zhou, X., Hu, Y., & Zhang, X. (2020). Role stress and turnover intention of front-line hotel employees: The roles of burnout and service climate. *Frontiers in Psychology*, 11, 36. https://doi.org/10.3389/fpsyg.2020.00036.

Werang, B. R., Asaloei, S. I., & Jim, E. L. (2025). Indonesian Teachers' Work-Related Stress, Emotional Exhaustion, and Job Performance: A Study of Relationships. *Pegem Journal of Education and Instruction,* 15(3), 50–592122.

Windelband, L. (2023) Artificial Intelligence and Assistance Systems for Technical Vocational Education and Training – Opportunities and Risks. In: Shajek, A., Hartmann, E.A. (eds) New Digital Work. Springer, Cham. https://doi.org/10.1007/978-3-031-26490-0_12.

Wojtkowska, K., Stolarski, M., & Matthews, G. (2021). Time for work: Analyzing the role of time perspectives in work attitudes and behaviors. *Current Psychology*, 40(12), 5972-5983.

World Bank (2021). World development report 2021: Data for better lives. *The World Bank Group*. https://www.worldbank.org/en/publication/wdr2021.

World Economic Forum. (2025). The future of jobs report 2025 (Report). https://www.weforum.org/reports/the-future-of-jobs-report-2025/.

Wu, D., Zhou, C., Liang, X., Li, Y., & Chen, M. (2022). Integrating technology into teaching: Factors influencing rural teachers' innovative work behavior. *Education and Information Technologies*, 27(4), 5325–5348. https://doi.org/10.1007/s10639-021-10815-6.

Xie et al. (2022). Effect of role overload on missed nursing care in China: The role of work addiction and leader-member exchange. *Nursing Open*. https://doi.org/10.1002/nop2.1565.

Xie, D., Zhu, X., Zhang, X., Jiang, Z., Wang, X., & Liu, T. (2024) Research on the correlation between clinical nurses' self-efficacy, future time perspective, and occupational burnout. *Frontiers in Public Health*, 12, 1363450. https://doi.org/10.3389/fpubh.2024.1363450.

Xie, F. (2021). A study on Chinese EFL teachers' work engagement: The predictability power of emotion regulation and teacher resilience. *Frontiers in Psychology*, 12, 735969. https://doi.org/10.3389/fpsyg.2021.735969.

Xie, J., Wen, Z., Ma, Y., Cai, B., & Liu, X. (2024). Associations among challenge stress, hindrance stress, and employees' innovative work behavior: Mediation effects of thriving at work and emotional exhaustion. *The Journal of Creative Behavior*, 58(1), 66‑81. https://doi.org/10.1002/jocb.624.

Xie, X., Zhang, S., & Li, Y. (2024). Validating the role overload scale in the Chinese higher education context: A study among vocational college teachers. *Educational Psychology*, 44(1), 25–40. https://doi.org/10.1080/01443410.2024.1863292.

Xinhua News (2024, November 19). Building a high-quality education system to provide education that satisfies the people: An overview of the high-quality development of Heilongjiang Province's education sector. *Globe Magazine*. Retrieved from https://news.cn/globe/20241119/d070fc906e9b4a449b55e21522988fb3/c.htm.

Xinhua News Agency. (2022, April 20). The new vocational education law comes into effect on May 1. Retrieved from https://www.gov.cn/xinwen/2022-04/20/content_5686315.htm.

Xu, L. (2019). Teacher–researcher role conflict and burnout among Chinese university teachers: A job demand-resources model perspective. *Studies in Higher Education*, 44(6), 903–919. https://doi.org/10.1080/03075079.2017.1399261.

Xu, M., Chen, S., & Nie, Y. (2024). Core issues, evolution, and prospects of youth employment research in China. *Population & Economics*, (5), 92–107. https://doi.org/10.3969/j.issn.1000-4149.2024.00.043.

Xu, P., & Li, C. (2024). Adapting to new productive forces: Five major challenges for China's modern vocational education system. *Heilongjiang Researches on Higher Education*, (11), 6-13. https://doi.org/10.19903/j.cnki.cn23-1074/g.2024.11.002.

Xu, R., & Jia, X. (2022). An investigation into Chinese EFL teachers' self-efficacy and stress as predictors of engagement and emotional exhaustion. *SAGE Open*, 12(2). https://doi.org/10.1177/21582440221093342.

Xu, S. (2024). Research on the cultivation path of innovative teachers in higher vocational colleges in the new era. *Shipbuilding Vocational Education*, 12(4), 04-05-04.

Xu, T., & Wang, J. (2021). Vocational education and the demands of emerging industries in Heilongjiang Province. *Journal of Vocational and Technical Education*, 12(4), 120-135.

Xu, Y., Liao, C., Huang, L., Li, Z., Xiao, H., & Pan, Y. (2024). The positive side of stress: Investigating the impact of challenge stressors on innovative work behavior in higher education. *Acta Psychologica*, 246, 104255. https://doi.org/10.1016/j.actpsy.2024.104255.

Xu, Y., Liu, D., & Tang, D.-S. (2022). Decent work and innovative work behaviour: Mediating roles of work engagement, intrinsic motivation and job self-efficacy. *Creativity and Innovation Management*, 31(1), 12480. https://doi.org/10.1111/caim.12480.

Xu, Z., Wang, H., & Suntrayuth, S. (2022). Organizational climate, innovation orientation, and innovative work behavior: The mediating role of psychological safety and intrinsic motivation. Discrete Dynamics in Nature and Society, Article 9067136. https://doi.org/10.1155/2022/9067136.

Xu, Z., Wang, H., & Suntrayuth, S. (2022)Organizational climate, innovation orientation, and innovative work behavior: The mediating role of psychological safety and intrinsic motivation. *Discrete Dynamics in Nature and Society*, 2(1), 9067136.

Xue, E., & Li, J. (2022). Exploring the type-based vocational education system: Insights from China. *Educational Philosophy and Theory*, 54(10), 1670–1680. https://doi.org/10.1080/00131857.2021.1934668.

Yahya, A. S., & Rusdiansyah, N. (2023). Exploring social and environmental accounting reporting through Jurgen Habermas's critical theory. *West Science Interdisciplinary Studies*, 1(08), 552-564.

Yang, L., Shi, Q. D., & Xiang, J. R. (2023). Mediating effects of future time perspective on the relationship between mindfulness and learning burnout in college students: A cross-sectional descriptive study. *Medicine*, 102(19), e33740. https://doi.org/10.1097/MD.0000000000033740.

Yap, C. Y. (2010). Predictive effects of managerial need support, basic psychological need satisfaction, and role overload on work engagement (Unpublished doctoral dissertation). Universiti Kebangsaan Malaysia.

Ye, P., Liu, L., & Tan, J. (2022). Creative leadership, innovation climate and innovation behaviour: The moderating role of knowledge sharing in management. *European Journal of Innovation Management*, 25(4), 1092–1114. https://doi.org/10.1108/EJIM-05-2020-0199.

Ye, Q., Wang, D., & Li, X. (2022).How innovation climate influences employees' innovative work behavior: The mediating role of psychological empowerment. *Current Psychology*, 41(9), 6021–6033.https://doi.org/10.1007/s12144-020-01025-3.

Yeap, S. B. (2024). Did ethical leadership help to increase academic staff's innovative work behavior? The mediating role of intrinsic motivation and proactive personality. *Current Psychology*, 43, 9625–9637. https://doi.org/10.1007/s12144-023-04960-z.

You, Y., Hu, Z., Li, J., Wang, Y., & Xu, M. (2022). The effect of organizational innovation climate on employee innovative work behavior: The role of psychological ownership and task interdependence. *Frontiers in Psychology*, 13, Article 856407. https://doi.org/10.3389/fpsyg.2022.856407.

Youssef, C. M., & Luthans, F. (2007).Psychological capital: Positive organizational behavior at work.

Yu, J., Liu, J., Lin, S., & Chi, X. (2022). The relationship between stressors and Chinese employees' innovative work behavior: The role of task crafting and psychological detachment. *European Journal of Innovation Management*, 27(6), 1864–1884. https://doi.org/10.1108/EJIM-08-2022-0376.

Yu, X., & Meng, X. (2021). Intrinsic motivation, knowledge sharing and innovation behavior of knowledge-based employees in the industrial new generation. *Converter*, 75-87.

Yuan, W., & Wang, Y. (2021). The development of vocational education and training in China. 1st International Conference on Education: Current Issues and Digital Technologies 375–383. https://www.atlantis-press.com/proceedings/icecidt-21/12595726.

Yulianto, H. (2021). Philosophy of management science: Ontology, epistemology, and axiology perspectives. *Cross-Border Journal of Business Management*, 1(1), 152-162.

Zadow, A., Loh, M. Y., Dollard, M. F., Mathisen, G. E., & Yantcheva, B. (2023). Psychosocial safety climate as a predictor of work engagement, creativity, innovation, and work performance: A case study of software engineers. *Frontiers in Psychology*, 14, 1082283.https://doi.org/10.3389/fpsyg.2023.1082283.

Zafar Ahmad, Faiza Khalid, Hameeda Matooq Aljanabi, Mohammed Mdawe R Alshahrani, Ibtesam Jahlan, Safiya Salem Bakarman, … Sayed Shahbal. (2024). Occupational Stress, Job Performance and Role Overload Among Nurses Working in the Healthcare Sector: A Mediational Model. *Kurdish Studies*, 12(1), 2883–2894. Retrieved from https://kurdishstudies.net/menu-script/index.php/KS/article/view/1576.

Zahednezhad, H., Zareiyan, A., & Zargar Balaye Jame, S. (2021). Relationship between quality of work-life, resilience and burnout among nursing professionals during COVID-19 pandemic in Iran: A cross-sectional study. *Belitung Nursing Journal*, 7(6), 508–515. https://doi.org/10.33546/bnj.1702.

Zhang Xiaoxia, Haitao Huang, Songtao Zhao, Dan li and Hua Du (2025). Emotional exhaustion and turnover intentions among young ICU nurses: a model based on the job demands-resources theory. *BMC Nursing*, 24(1): 136. https://doi.org/10.1186/s12912-025-02765-y.

Zhang, H. (2022). Structural equation modeling. In Models and Methods for Management Science (pp. 363-381). Singapore: Springer Nature Singapore.

Zhang, H. (2023). Technostress, Academic Self-Efficacy, and Resistance to Innovation: Buffering Roles of Knowledge Sharing Culture and Constructive Deviant Behavior. *Psychology Research and Behavior Management*, 16, 3867–3881. https://doi.org/10.2147/PRBM.S424396.

Zhang, J., Chen, G., Yu, Q., Meng, Y., Lv, Z., & He, J. (2024). Longitudinal relations between future time perspective and academic engagement among Chinese college students: The mediating role of career adaptability. *Current Psychology*, 1-15. https://doi.org/10.1007/s12144-024-06951-0.

Zhang, N., Xu, D., Li, J., & Xu, Z. (2022). Effects of role overload, work engagement and perceived organisational support on nurses' job performance during the COVID-19 pandemic. *Journal of Nursing Management*, 30(4), 901–912. https://doi.org/10.1111/jonm.13598.

Zhang, S., & Luo, Y. (2023). Review on the conceptual framework of teacher resilience. *Frontiers in Psychology*, 14, 1179984. https://doi.org/10.3389/fpsyg.2023.1179984.

Zhang, S., Guo, P., Yuan, Y., & Ji, Y. (2025). Anxiety or engaged? Research on the impact of technostress on employees' innovative behavior in the era of artificial intelligence. *Acta Psychologica*, 259, 105442. https://doi.org/10.1016/j.actpsy.2025.105442.

Zhang, W., & Chin, T. (2024). How employee career sustainability affects innovative work behavior under digitalization. *Sustainability*, 16(9), 3541. https://doi.org/10.3390/su16093541.

Zhang, W., & Wood, S. (2025). Awareness of age-related change and proactivity at work: The mediating roles of future time perspective and goal setting. *Current Psychology*, 18. https://doi.org/10.10007/s12144-025-07343-8.

Zhang, W., Zeng, X., Liang, H., Xue, Y., & Cao, X. (2023). Understanding how organizational culture affects innovation performance: A management context perspective. *Sustainability*, 15(8), 6644. https://doi.org/10.3390/su15086644.

Zhang, X., Wei, X., Zhang, T., Tan, Y., Xu, D., & de Pablos, P. O. (2023). How platform-based internet hospital innovation affects doctors' active stress coping efforts: The conservation of resource theory perspective. *Technovation*, 121, 102556. https://doi.org/10.1016/j.technovation.2022.102556.

Zhang, Y. (2019). Role overload and its impact on vocational college teachers: A study from underdeveloped regions. *Educational Research and Development*, 35(4), 32–40.

Zhang, Y., and Xie, Y. H. (2017). Authoritarian leadership and extra-role behaviors: a role-perception perspective. *Manag. Organ. Rev*. 13, 147–166. https://doi.org/10.1017/ mor.2016.36.

Zhao, H., & Li, X. (2021). Aligning vocational education curriculum with industry needs: The case of Northeast China. *Journal of Applied Technical Education*, 15(2), 98-112.

Zhao, H., Qin, S., Ding, W., Li, Z., & Gao, R. (2025). Mediating role of intrinsic learning motivation in the relationship between future time perspective and classroom disengagement among Chinese nursing students. Research Square. https://doi.org/10.21203/rs.3.rs-7203462/v1.

Zhao, N., & Han, S. (2024) Strategies and practices of curriculum reform in vocational education under the background of digital transformation. *The Frontiers of Society, Science and Technology*, 6(9), 41–45. https://doi.org/10.25236/FSST.2024.060907.

Zheng, X., Liu, Q., Yang, S., Lu, G., & Wu, L. (2024). Investigating teacher technostress in technology-supported teacher learning with person–environment fit theory. *The Asia-Pacific Education Researcher*. https://doi.org/10.1007/s40299-024-00935-1.

Zheng, Y., & Yu, X. (2021). Factors influencing the innovative work behaviors of higher vocational college teachers from the perspective of person-organization fit. *Journal of Higher Education Management*, 15(5), 105–111. https://doi.org/10.13316/j.cnki.jhem.20210824.010.

Zhou, H., & Chen, J. (2021). How does psychological empowerment prevent emotional exhaustion? Psychological safety and organizational embeddedness as mediators. *Frontiers in Psychology*, 12, 546687. https://doi.org/10.3389/fpsyg.2021.546687.

Zhou, H., & Zheng, Q. (2022). Work stressors and occupational health of young employees: The moderating role of work adaptability. *Frontiers in Psychology*, 13, 796710. https://doi.org/10.3389/fpsyg.2022.796710.

Zhou, X., Smith, C. J. M. B., & Al-Samarraie, H. (2024). Digital technology adaptation and initiatives: A systematic review of teaching and learning during COVID-19. *Journal of Computing in Higher Education*. https://doi.org/10.1007/s12528-023-09376-z.

Zimba, O., & Gasparyan, A. Y. (2023). Designing, conducting, and reporting survey studies: A primer for researchers. *Journal of Korean Medical Science*, 38(48). https://doi.org/10.3346/jkms.2023.38.e403.

APPENDIXES

APPENDIX A

Questionnaire (English Version)

Appendix A. Questionnaire (English Version)

Rattanakosin International College of Creative Entrepreneurship
Of Rajamangala University of Technology, Rattanakosin
Questionnaire of the Influence of teachers' innovative work behavior in higher vocational colleges

---

Dear Teacher,

First of all, we sincerely thank you for participating in this study. This research focuses on the factors influencing innovative work behavior among teachers in higher vocational colleges in Heilongjiang Province. The purpose of this study is to explore how technostress, role overload, resilience, future time perspective in one's career, and innovative climate affect the innovative work behaviors demonstrated by higher vocational college teachers in their teaching practices. We hope that through this survey, we can gain insights into your perspectives and experiences, which will serve as a valuable reference for academic research. We greatly appreciate your participation.

We sincerely invite you to devote some of your valuable time and share your opinions by completing this questionnaire. Your responses are extremely important to this study. Please read each item carefully and answer according to your personal thoughts and feelings. All data collected in this questionnaire will be used solely for academic research purposes and will not have any impact on you. The survey is anonymous, so please feel free to respond honestly. Please note that you have the right to decline participation in this study. By beginning to complete the questionnaire after reading this statement, you indicate your consent to participate in this research.

If you have any questions, please contact 1661110381105@rmutr.ac.th.

Part 1: Basic personal information

Your gender:

- ☐ Male
- ☐ Female

Your age:

- ☐ 0-25
- ☐ 26-30
- ☐ 31-35
- ☐ 36-40
- ☐ 41-45
- ☐ 46-50
- ☐ 51 and above

Your work experience:

- ☐ Less than 1 year
- ☐ 1-5 years
- ☐ 6-10 years
- ☐ More than 10 years

Your academic rank:

- ☐ Assistant Lecturer
- ☐ Lecturer
- ☐ Associate professor
- ☐ Professor

Your educational level:

- ☐ Associate Degree
- ☐ Bachelor's Degree
- ☐ Master's Degree
- ☐ Doctorate Degree

Your managerial position:

- ☐ Yes
- ☐ No

Your innovative practices in the teaching process:

- ☐ Yes
- ☐ No

Your application of new technology tools in teaching:

☐ VR ☐ AR

☐ AI tools ☐ Big Data anlalysis tools

☐ Intelligent Teaching Platforms ☐ Online Teaching tools

☐ Others ☐ Never

Your additional work roles beyond core teaching duties:

☐ Yes

☐ No

Part 2: Scale items

Please tick the corresponding boxes, 1 means strongly disgree, 2 means disagree, 3 means somewhat disagree, 4 means neutral, 5 means somewhat agree, 6 means agree, and 7 means strongly agree.

Variables	Items	1	2	3	4	5	6	7
Technostress	1. I am forced by new teaching technologies to work faster.							
	2. I feel that new teaching technologies are invading my personal life (e.g. dealing with technical issues after work).							
	3. I do not know enough about the new technologies required in teaching to handle my job satisfactorily.							
	4. I feel that the rapid updates in teaching technologies may threaten my job security.							
	5. There are always new developments in teaching technologies we use in our college.							
Innovative Work Behavior	1. I pay attention to issues that are not part of my daily work.							
	2. I wonder how things can be improved.							

Variables	Items	1	2	3	4	5	6	7
	3. I search out new teaching methods, techniques or instruments.							
	4. I generate original solutions for teaching problems.							
	5. I find new approaches to execute teaching tasks.							
	6. I make my leaders and colleagues enthusiastic for innovative ideas.							
	7. I attempt to convince people to support an innovative idea.							
	8. I systematically introduce innovative ideas into teaching practices.							
	9. I contribute to the implementation of new ideas.							
	10. I put effort in the development of new things.							
Innovation Climate	1. Our college provides teachers with time and resources to generate, share/exchange, and experiment with innovative ideas or solutions.							
	2. Our teachers are working in diversity skilled work groups where there is free and open communication among the group members.							
	3. Our teachers frequently encounter non-routine and challenging tasks that stimulate creativity.							
	4. Our teachers are recognized and rewarded for creativity and innovative ideas.							

Variables	Items	1	2	3	4	5	6	7
Intrinsic Motivation	1. I enjoy finding solutions to complex problems.							
	2. I enjoy coming up with new ideas for curriculum design or teaching activities.							
	3. I enjoy engaging in analytical thinking.							
	4. I enjoy creating new procedures for work tasks.							
	5. I enjoy improving existing processes or teaching methods.							
Career Future Time Perspective	1. I believe there are many career opportunities available to me in the future within the higher vocational education field.							
	2. I am confident that my future career will be successful.							
	3. I perceive that opportunities in my future career seem infinite to me.							
	4. My future career is more important to me than my current career.							
	5. It is more important for me to prepare future career than to enjoy my present life.							
	6. It is more important to determine future-oriented career goal than short-term goal for me.							
	7. As a higher vocational college teacher, I believe it is essential to plan for my future career and continuously work towards it.							
	8. I am actively preparing for my career success by gradually improving my teaching and academic skills.							

Variables	Items	1	2	3	4	5	6	7
	9. I believe that engaging in professional development activities and learning opportunities is crucial for my future career growth.							

Please tick the corresponding boxes, 1 means strongly disagree, 2 means disagree, 3 means neutral, 4 means agree, and 5 means strongly agree.

Variables	Items	1	2	3	4	5
Role Overload	1. There is a need to reduce some parts of my role in my college.					
	2. I feel overburdened in my role in my college (e.g. teaching, administration work).					
	3. I feel I am given too much responsibility in my college.					
	4. My work load is too heavy.					
	5. The amount of work I have to do interferes with the quality I want to maintain.					
Resilience	1. I am able to adapt to change.					
	2. I can deal with whatever challenges in my work.					
	3. I try to see the humorous side of problems at work to relieve stress.					
	4. Coping with stress can strengthen me.					
	5. I tend to bounce back after difficulties or setbacks.					
	6. I can achieve goals despite obstacles.					
	7. I can stay focused under pressure.					
	8. I am not easily discouraged by failure.					
	9. I think of myself as a resilient person who can stay strong during challenges.					
	10. I can handle unpleasant feelings that arise during my work.					

Variables	Items	1	2	3	4	5
Emotional Exhaustion	1. I feel emotionally drained from my work in higher vocational college.					
	2. I feel used up at the end of each workday.					
	3. I feel fatigued when I get up in the morning and have to face another day on my job.					
	4. Working with students or colleagues all day is really a strain for me.					
	5. I feel burned out from my work.					
	6. I feel frustrated by my job.					
	7. I feel I'm working too hard on my job.					
	8. Working with students or colleagues directly puts too much stress on me.					
	9. I feel like I'm at the end of my rope.					

Answer is finished, please submit it. Thank you!

APPENDIX B

Questionnaire (Chinese Version)

Appendix B. Questionnaire (Chinese Version)



拉达那哥欣国际创意创业学院
拉加曼加拉理工大学拉达那科欣
高职教师创新工作行为影响因素的调查问卷

亲爱的老师，您好！

首先感谢您参与这项研究。这是一份关于影响黑龙江省高职院校教师创新工作行为因素的研究。本研究旨在探讨高职教师面临的技术压力、角色超载、复原力、职业未来时间视角、创新氛围如何影响高职院校教师在教学实践中展现出的创新工作行为。期待通过这个调查能够了解您的看法与感受，以提供学术研究参考，非常感谢您参与本次调查。

在此，需藉您宝贵的时间和意见，诚挚地邀请您填写本问卷。您的意见对本研究十分宝贵，请您仔细阅读各题项，依照个人想法与感受逐题填答。本问卷所收集之资料仅做学术研究使用，不会对您产生任何影响，匿名填答，请您安心。请注意，您有权拒绝参与这项研究，当您阅读完问卷开始填答，就代表您同意参与这项研究。如有任何疑问，请联系：1661110381105@rmutr.ac.th.

第一部分：基本个人信息

您的性别：

☐ 男性

☐ 女性

您的年龄：

☐ 0-25　　☐ 26-30

☐ 31-35　　☐ 36-40

☐ 41-45　　☐ 46-50

☐ 51 及以上

您的工作经历：

☐ 不到 1 年　　☐ 1-5 年

☐ 6-10 年　　☐ 超过 10 年

您的职称：

☐ 助理讲师　　☐ 讲师

☐ 副教授　　☐ 教授

您的学历：

☐ 专科　　☐ 学士学位

☐ 硕士学位　　☐ 博士学位

您是否承担管理岗位：

☐ 是

☐ 否

您在教学过程中是否有过创新实践：

☐ 是

☐ 否

您使用过哪些新的技术工具进行教学：

☐ 虚拟现实　　☐ 增强现实

☐ 人工智能工具　　☐ 大数据分析工具

☐ 智能教学平台　　☐ 在线教学工具

☐ 其他工具　　☐ 从未使用过

除核心教学工作外，您是否还承担其他角色/工作职责？

☐ 是

☐ 否

第二部分：问卷题项

请勾选相应的方框，1 表示非常不同意，2 表示不同意，3 表示有些不同意，4 表示中立，5 表示有些同意，6 表示同意，7 表示非常同意。

变量	题项	1	2	3	4	5	6	7
技术压力	1.新的教学技术迫使我加快工作速度。							
	2.我觉得新的教学技术正在侵入我的个人生活（例如，下班后还要处理技术问题）。							
	3.我对教学中所需的新技术了解不够，无法满意地完成我的工作。							
	4.我觉得教学技术的快速更新可能会威胁到我的工作。							
	5.我们学院使用的教学技术总是有新的发展。							
创新工作行为	1.我会关注那些与我的日常工作无关的问题。							
	2.我会思考如何改进当前的情况。							
	3.我会主动寻找新的教学方法、技巧或工具。							
	4.我会为教学中遇到的问题提出原创性的解决方案。							

变量	题项	1	2	3	4	5	6	7
	5.我找到了完成教学任务的新方法。							
	6.我会激发领导和同事对创新想法的热情。							
	7.我会试图说服他人支持一项创新理念。							
	8.我系统地将创新理念引入教学实践中。							
	9.我为新想法的实施做出实际贡献。							
	10.我致力于开发新事物。							
创新氛围	1.我们学院为教师提供时间和资源，让他们能够产生、分享/交流和尝试创新的想法或解决方案。							
	2.我们的教师在多元化的技能工作小组中工作，小组成员之间有自由开放的交流。							
	3.我们的教师经常遇到非常规和具有挑战性的任务，这激发了创造力。							
	4.我们的教师因其创造力和创新想法而受到认可和奖励。							
内在动机	1.我喜欢寻找复杂问题的解决方案。							
	2.我喜欢为课程设计或教学活动提出新想法。							
	3.我喜欢进行分析性思考。							
	4.我喜欢为工作任务制定新的流程。							
	5.我喜欢改进现有的流程或教学方法。							
职业未来时间视角	1.我认为自己未来有很多与职业相关的机会。							
	2.我相信自己的职业在未来很可能获得成功。							
	3.我觉得我未来职业生涯中的机会似乎是无限的。							
	4.对我来说，未来的职业比现在的职业更重要。							
	5.比起享受当下的生活，我更重视为未来职业做准备。							

变量	题项	1	2	3	4	5	6	7
	6.对我来说，确定面向未来的职业目标比实现短期目标更重要。							
	7.我认为规划未来的职业生涯并不断朝着这个目标努力至关重要。							
	8.我正在积极为我的职业成功做准备，逐步提高我的教学和学术技能。							
	9.我相信参与职业发展活动和学习机会对我的未来职业发展至关重要。							

请勾选相应的方框，1 表示非常不同意 2 表示不同意，3 表示中立，4 表示同意，5 表示强烈同意。

变量	题项	1	2	3	4	5
角色超载	1.我需要减少我在学院中的一些职责。					
	2.我觉得我在学院里的角色负担过重（例如教学、行政工作）。					
	3.我觉得我在我的工作中承担了太多责任。					
	4.我的工作任务过于繁重。					
	5.我必须完成的工作量影响了我想要保持的工作质量。					
复原力	1.我能够适应变化。					
	2.我能应对工作中的任何挑战。					
	3.我试着从工作中的问题中发现幽默的一面来缓解压力。					
	4.应对压力可以让我变得更强大。					
	5.我往往能在遇到困难或挫折后迅速恢复。					
	6.即使遇到困难，我也能实现目标。					
	7.我能在压力下保持专注。					
	8.我不会轻易因失败而气馁。					

变量	题项	1	2	3	4	5
	9.我认为自己是一个有复原力的人，能够在面对挑战时保持坚强。					
	10.我能处理工作中产生的不愉快情绪。					
情绪耗竭	1.我在高等职业学院的工作让我情绪疲惫。					
	2.每天工作结束时，我常常感觉筋疲力尽。					
	3.每天早上起床，一想到又要开始工作，就觉得特别疲惫。					
	4.整天和学生或同事打交道让我感到压力很大。					
	5.我因工作感到疲惫倦怠。					
	6.我因工作感到沮丧。					
	7.我觉得我在这份工作上投入得太多。					
	8.直接与学生或同事一起工作让我感到很有压力。					
	9.我觉得自己已经到了情绪和心理的极限。					

答案已完成，请提交。谢谢！

APPENDIX C

Research Ethics Certificate

APPENDIX C. Research Ethics Certificate

Research Ethics Certificate for Research Proposal,

explanatory information document about research participants and the consent letters

R. 466 / 2025

This research proposal and the supporting documents listed below have been reviewed by the Research Ethics Committee, Mahachulalongkornrajavidyalaya University. The committee stated that this research proposal is aligned with the International Code of Ethics, national law and regulatory requirements, therefore it was appropriate to continue the research according to this proposal.

Title of Proposal:	Unveiling the Influences on Teacher's Innovative Work Behavior in Higher Vocational Colleges in Heilongjiang Province, China
Research Proposal Code:	Dissertation
Institution:	Rattanakosin International College of Creative Entrepreneurship, Rajamangala University of Technology Rattanakosin
Researcher:	Ms. Zhidi Zhang

List of documents that have been reviewed:

1.	Research Proposal	version July 1, 2025
2.	Explanatory document about research participation	version July 1, 2025
3.	Letter of consent to participate in the research	version July 1, 2025
4.	Data collection method	version July 1, 2025

P. Panyavajra

Ven. Assoc. Prof. Dr. Phra Panyavajarapandit

President of Research Ethics Committee

Mahachulalongkornrajavidyalaya University

August 15, 2025

Certification Number:	R. 466 / 2025
Certified Date:	August 15, 2025
Certificate Expiration Date:	August 15, 2026

มหาวิทยาลัยมหาจุฬาลงกรณราชวิทยาลัย
๗๙ หมู่ ๑ ตำบลลำไทร อำเภอวังน้อย
จังหวัดพระนครศรีอยุธยา ๑๓๑๗๐
โทรศัพท์ ๐ ๓๕๒๔ ๘๐๐๐-๕ โทรสาร ๐ ๓๕๒๔ ๘๐๓๔
www.mcu.ac.th

Ref: MCU 8007/R.466

15th August 2025

Subject Certification of Research Ethics for Research Proposals

To Ms. Zhidi Zhang / The student of Rajamangala University of Technology Rattanakosin

As you have requested a research ethics certificate for the thesis research on "Unveiling the Influences on Teacher's Innovative Work Behavior in Higher Vocational Colleges in Heilongjiang Province, China" , at Rattanakosin International College of Creative Entrepreneurship, Rajamangala University of Technology Rattanakosin.

The Research Ethics Committee have considered your research tools with additional amendments according to the attached document.

Please be informed accordingly for further arrangement.

Regards,

(Ven. Assoc. Prof. Dr. Phra Panyavajarapandit)
The Chair of Research Ethics Committee
Mahachulalongkornrajavidyalaya University

APPENDIX D

Primary Data

APPENDIX D. Primary Data

The raw data is the first-hand data collected by the author during the survey. The quantitative data of this study was obtained from questionnaires filled out by 581 respondents. To keep the information confidential, if you want to obtain the original data, please contact the researchers through the following ways. Email: 161110381105@rmutr.ac.th. Thank you for your support.

APPENDIX E

Publication of Journal during Ph.D. Study

APPENDIX E. Publication of Journal during Ph.D. Study

African Educational Research Journal
Vol. 14(1), pp. 39-54, January 2026
ISSN: 2354-2160
Full Length Research Paper

The impact of technostress and role overload on innovative work behavior among higher vocational teachers: The mediating role of emotional exhaustion and intrinsic motivation

Zhidi Zhang, Lina Li* and Jirawan Deeprasert

Rattanakosin International College of Creative Entrepreneurship, Rajamangala University of Technology Rattanakosin, Salaya, Nakhon Pathom, 73170, Thailand.

Accepted 20 January, 2025

ABSTRACT

Considering the fast development of digital technologies and the changing requirements of the labor market, innovative work behavior (IWB) among higher vocational college teachers is crucial for the sustainability and adaptability of vocational education. This study draws from the Job Demands–Resources (JD–R) model and Conservation of Resources (COR) theory to explore how job demands shape innovative work behaviors among teachers in China's higher vocational colleges. Using a convenience sampling approach, data were collected from 581 full-time teachers through an online survey distributed via Wenjuanxing. Structural equation modeling with bootstrapping was applied to investigate both direct and indirect effects. The results indicated that technostress and role overload operate primarily as hindrance stressors, exerting direct negative effects on innovative work behavior while also indirectly inhibiting IWB by increasing emotional exhaustion and reducing intrinsic motivation. Theoretically, this study contributes to the literature of JD–R and COR frameworks by clarifying the resource-depletion and motivational-loss mechanisms through which digitally driven and role-related job demands constrain teachers' innovation. Practically, the findings suggest that alleviating excessive technological pressures and role demands is essential for reducing emotional exhaustion, enhancing intrinsic motivation, and ultimately fostering innovative work behavior among higher vocational college teachers.

Keywords: Emotional exhaustion, higher vocational teachers, innovative work behavior, intrinsic motivation, role overload, technostress.

*Corresponding author. E-mail: li.lina@rmutr.ac.th.

INTRODUCTION

Globally, the rapid pace of the industrial revolution and technological transformation is reshaping the labor market, leading to increasingly complex and advanced skill demands (World Economic Forum, 2025). The widespread application of emerging technologies like Artificial Intelligence (AI), Big Data, Augmented Reality (AR), and Virtual Reality (VR)—is fundamentally transforming traditional work patterns, rendering traditional vocational skills insufficient for the future workforce (Hossain, 2023; Thangavel et al., 2025). In this evolving landscape, higher vocational education serves as a vital bridge between education and employment, necessitating proactive innovation to ensure students acquire the technical competencies required by modern industries (Zhao and Han, 2024).

Teachers are the cornerstone of this educational transformation (Wang et al., 2024). Their innovative work behavior (IWB)—defined as the proactive initiation and implementation of new ideas, teaching methods, and strategies to enhance educational quality—is essential for

optimizing instructional processes and driving institutional adaptability (Lambriex-Schmitz et al., 2020; AlEssa and Durugbo, 2022). In China, which hosts the world's largest vocational education system, higher vocational colleges supply a substantial proportion of frontline technical talent for modern manufacturing and emerging industries (Kang, 2025). However, innovation practices among higher vocational teachers remain uneven, and persistent mismatches between graduates' competencies and industry requirements continue to be reported (Zhu, 2023; Müller, 2024). Therefore, fostering teachers' IWB in higher vocational colleges is crucial to ensure students acquire the latest skills required by the industries.

Previous studies have explored various factors that influence teachers' innovative work behavior (IWB), identifying both facilitators and inhibitors of IWB (Messmann and Mulder, 2020). Among these, stress-related factors such as work-related stress and role stressors have received increasing attention in recent years (Anjum and Zhao, 2022). Technostress, in particular, has emerged as a critical area of focus, as it may act as a potential inhibitor of teachers' IWB (Chandra et al., 2019; Pansini et al., 2023). The development of technology is not always positive. When confronted with new technologies or technological changes, individuals who perceive themselves as lacking the skills to cope with technologies are more likely to experience stress, leading to technostress (Rohwer et al., 2022). Technostress refers to the psychological burden and difficulties individuals face when adapting to and using new technologies (Wang and Yao, 2025). When individuals encounter overly complex technologies, they may feel helpless and uncertain, making them reluctant to engage in innovative practices. Particularly in higher vocational education, the rapid advancement of technology requires teachers to quickly learn and master a range of new tools, including online teaching platforms, AR or VR technologies, and AI, thereby placing greater demands on teachers' technical adaptability (Liu et al., 2023). Technostress significantly alters teachers' work habits and teaching behaviors, reducing their willingness to adopt innovative technologies in the classroom (Califf and Brooks, 2020), which could inhibit their IWB.

Additionally, role overload may be another key factor influencing teachers' innovative work behavior (Clarke and Higgs, 2020; Huang et al., 2021). Role overload refers to the stress that individuals face when they are required to handle too many responsibilities or tasks while having insufficient resources (such as time and ability) to do so (Rafique, 2023). Higher vocational teachers face intensified and multifaceted job demands that extend beyond traditional classroom teaching, including administrative responsibilities, practical skills training, and engagement in school-enterprise cooperation (Chen and Li, 2024). In China, particularly within the context of industry-education integration in higher vocational education, teachers are increasingly required to engage in more school-enterprise joint programs, to supervise students during internships, and provide career guidance, all of which further add to their roles (Liu et al., 2018). As a source of role stress, role overload leads to the depletion of an individual's psychological and emotional resources (Apenteng et al., 2022; Malik and Siddiqui, 2022). This depletion can weaken their ability and motivation to participate in innovative activities, which can inhibit teachers' IWB in higher vocational colleges.

To understand these dynamics, the JD-R framework suggests that excessive job demands can lead to a health impairment process. In line with this, COR theory highlights individuals' efforts to obtain and preserve key resources. When resources are depleted by stress, individuals enter a conservation mode, prioritizing routine tasks over resource-intensive activities like innovation (Hobfoll et al., 2018; Lackey et al., 2025).

While previous studies have explored the role of job stressors in IWB, most have emphasized traditional work-related stressors, including time pressure, workload, and task variety, with relatively less attention paid to the impact of technostress and role overload on IWB. Technostress, a critical challenge in digital education (Pansini et al., 2023), has been found to have limited and inconsistent empirical results regarding its effects on IWB. Some studies suggested that technostress hinders innovation and creativity (Hessari et al., 2024; Zhang, 2023), while others indicated a potential non-linear relationship where moderate technostress stimulates innovation, whereas excessive stress impedes it (Panisoara et al., 2020; Chandra et al., 2019). Furthermore, some researchers also argued that some technostressors have no direct impact on IWB (Hurbean et al., 2022). Thus, the relationship between technostress and IWB remains unclear. Additionally, role overload, which is also considered a job stressor for educators (Moore et al., 2021), has not been fully explored in its relationship with IWB. Existing studies provide mixed findings, with some suggesting that role overload may act as a challenging stressor (Lin and Ling, 2018; Chung et al., 2022), while others proposed that it may serve as a hindering stressor by depleting emotional resources and suppressing innovative behavior (Tang and Vandenberghe, 2021; Clarke and Higgs, 2020). Therefore, a theoretical gap exists in understanding the relationship between role overload and IWB, especially in the context of higher vocational teachers. Moreover, how technostress and role overload influence IWB through mechanisms such as emotional exhaustion and intrinsic motivation remains an underexplored area. This study will contribute to filling this gap by examining how technostress and role overload affect IWB among higher vocational teachers, while also identifying the mediating mechanisms at play.

Specifically, this research seeks to examine how technostress and role overload influence teachers' innovative work behavior (IWB) and to explore how emotional exhaustion and intrinsic motivation mediate the

relationships between technostress, role overload, and teachers' IWB. This study aims to offer both theoretical insights and practical implications. This study seeks to extend stress-related theories by examining whether technostress and role overload function predominantly as hindrance stressors that may influence teachers' IWB and identifying the mediating psychological mechanisms. From an educational management perspective, this study aims to provide evidence-based insights for administrators in higher vocational colleges to design targeted strategies and interventions that foster teachers' IWB, ensuring that it meets the demands of the evolving labor market.

LITERATURE REVIEW AND HYPOTHESIS DEVELOPMENT

Job demands–resources theory

The Job Demands-Resources (JD-R) model serves as the foundation of this research, as it is one of the most influential frameworks in management and organizational behavior for explaining how job characteristics influence psychological health and performance (Lesener et al., 2020; Galanakis and Tsitouri, 2022). Job characteristics fall into two categories, namely job demands and job resources (Roskams et al., 2021). Among them, job demands represent the negative aspects of a role that require sustained physical or psychological effort and are associated with specific costs (Bakker et al., 2023). Technostress is considered a job demand because teachers must exert significant effort to cope with rapid technological shifts. Similarly, role overload is viewed as a demand due to the excessive responsibilities and time pressures that result in physiological and psychological strain (Tang and Vandenberghe, 2019). The health impairment process suggests that job demands deplete energy, leading to emotional exhaustion and reduced performance (Bakker and Vries, 2021). This health impairment provides insight into how job demands impact teachers' IWB.

Conservation of resources theory

To complement the focus of the JD-R model, this study utilizes the Conservation of Resources (COR) theory to explain the dynamic management of stress and innovation (Hobfoll et al., 2018). The fundamental assumption of COR theory is that individuals have an inherent motivation to acquire, protect, and maintain resources so that stress arises when these resources are threatened or lost. A central tenet of this theory is the loss dominance principle, which states that the negative impact of resource loss is significantly more powerful than the positive effect of resource gain (Halbesleben et al., 2014). When teachers face technostress or role overload, the resulting resource depletion forces them into a 'resource conservation mode'. In this state, they may prioritize routine tasks and withdraw from resource-intensive activities like innovation to prevent further loss (Lackey et al., 2025). This can help explain the negative relationship between hindrance stressors and IWB. Therefore, COR theory elucidates the motivational withdrawal mechanism through which depleted resources undermine intrinsic motivation and innovative work behavior.

Technostress and innovative work behavior

Technostress is conceptualized as an adaptive issue arising when individuals are unable to effectively cope with or adapt to the implementation of information and communication technologies (ICT) (Nastjuk et al., 2024). This study adopts the widely used definition by Tarafdar et al. (2007), which identifies five core dimensions, including techno-overload, techno-invasion, techno-complexity, techno-insecurity, and techno-uncertainty (Pothuganti, 2024). In the educational sector, technostress is viewed as a "modern disease" that alters teachers' work habits and teaching practices, causing anxiety, fatigue, and diminished productivity (Zheng et al., 2024; Ranathunga and Rathnakara, 2022). However, IWB is an autonomously driven and resource-intensive behavior that requires significant cognitive and emotional investment (Zia et al., 2024).

Drawing on the JD-R model, technostress is positioned as a critical job demand that initiates a health impairment process (Pansini et al., 2023). Coping with complex technological systems requires individuals to exert sustained 'physical and/or psychological' effort, which relentlessly consumes their cognitive and emotional resources. According to COR theory, individuals have an inherent drive to protect their valued resources (Hobfoll et al., 2018). When technostress threatens these resources, individuals enter a 'conservation mode', prioritizing routine duties over discretionary, resource-intensive activities like innovation to prevent further loss. High levels of technostress deplete individual psychological resources, weaken cognitive control, and reduce self-efficacy, which in turn increases resistance to innovation (Zhang, 2023).

Teachers experiencing technostress may adopt conservative teaching methods, thereby hindering the adoption of innovative technologies and pedagogical approaches (Califf and Brooks, 2020). Empirical evidence confirmed that technostress, particularly techno-complexity and techno-uncertainty, negatively impacts teachers' innovative behavior (Wu et al., 2022). Without adequate technical support and training, teachers are less likely to experiment with new teaching tools and strategies, which directly affects their willingness to innovate. Therefore, the following hypothesis was proposed:

H_1: Technostress has a negative effect on teachers' innovative work behavior.

Role overload and innovative work behavior

Role overload is a critical work-related stressor rooted in Role Theory, defined as a condition in which individuals perceive that the volume of tasks, responsibilities, or expectations associated with their professional roles exceeds their available time, abilities, or personal resources (Alyamy and Cheong, 2020). Rather than being an objective measure of workload, role overload is fundamentally subjective, emphasizing the perceived imbalance between external job demands and internal coping capacity (Tang and Vandenberghe, 2021). In the specific landscape of higher vocational education, teachers frequently encounter multiple role demands, simultaneously managing diverse expectations including classroom instruction, academic research, administrative duties, and school-enterprise collaborations (Shan, 2020). This accumulation of roles makes role overload a particularly salient predictor of career stress for teachers (Meng and Wang, 2018).

Within the framework of the JD-R model (Bakker et al., 2023), role overload is conceptualized as a significant job demand that triggers a health impairment process. Because managing excessive responsibilities requires sustained cognitive, emotional, and physical effort, it leads to a decline in individual functioning and mental well-being (Abdou et al., 2024). When teachers are forced to dedicate all their energy to fulfilling basic task requirements and administrative mandates, their 'cognitive space' for creative experimentation is severely constricted (Van Essen et al., 2022). IWB is largely considered an extra-role performance, meaning it is discretionary and highly resource-intensive (Kwon and Kim, 2020). However, role overload can trigger the Behavioral Inhibition System (BIS), leading to withdrawal behaviors that directly suppress the extra-role efforts required for innovation (Huang et al., 2021). Therefore, this study proposed the hypothesis below.

H_2: Role overload has a negative effect on teachers' innovative work behavior.

The mediating role of emotional exhaustion

Emotional exhaustion, defined as a state of emotional and physical depletion caused by prolonged exposure to excessive job demands, is widely recognized as the core dimension of job burnout (Maslach et al., 2001; Edú-Valsania et al., 2022). Within the JD-R model, emotional exhaustion plays a central role in the health impairment process by transmitting the detrimental effects of job demands to unfavorable work outcomes (Demerouti et al., 2001; Park et al., 2022). Prior studies consistently demonstrate that emotional exhaustion negatively affects innovative work behavior (IWB). Innovation requires sustained cognitive effort, emotional engagement, and additional time investment, while its outcomes are often uncertain and delayed (Koopman et al., 2016). In line with COR theory, individuals experiencing emotional exhaustion seek to conserve their remaining resources through reducing involvement in discretionary and effort-intensive activities, such as innovation, to avoid further resource loss (Bakker and De Vries, 2021). Empirical evidence reveals that employees who are emotionally exhausted are less likely to participate in innovative practices across organizational contexts (Liang et al., 2022; Gkontelos et al., 2023), including educational settings where emotional exhaustion suppresses teachers' motivation, cognitive flexibility, and engagement in teaching innovation (Jamal et al., 2023).

Technostress and role overload represent two salient job demands that contribute to emotional exhaustion. Technostress, stemming from continuous adaptation to complex information technologies, has been shown to intensify psychological strain, information overload, and emotional fatigue, particularly in environments with inadequate technical support (Wang et al., 2022; Consiglio et al., 2023). In educational management contexts, technostress has been identified as a significant antecedent of teachers' emotional exhaustion, especially under conditions of rapid technological change and digitalized teaching practices (Alvarez-Risco et al., 2021; Bail et al., 2023; Penado et al., 2021). Similarly, role overload reflects excessive work responsibilities that exceed available time and energy, which further accelerates emotional resource depletion and emotional exhaustion (Bourlakis et al., 2023). Taken together, emotional exhaustion is expected to serve as a key mediating mechanism through which technostress and role overload impair teachers' IWB. Therefore, according to the analysis above, this study proposed the following hypothesis.

H_3: Technostress has a positive effect on teachers' emotional exhaustion.
H_4: Role overload has a positive effect on teachers' emotional exhaustion.
H_5: Emotional exhaustion has a negative effect on teachers' innovative work behavior.
H_{6a}: Emotional exhaustion mediates the relationships between technostress and teachers' innovative work behavior.
H_{6b}: Emotional exhaustion mediates the relationships between role overload and teachers' innovative work behavior.

The mediating role of intrinsic motivation

Intrinsic motivation refers to the internal drive to pursue an activity due to inherent interest, satisfaction, or the positive challenge of the task itself, rather than external rewards (Ryan and Deci, 2020; Siyal et al., 2021). Intrinsic motivation has long been seen as an important predictor

of employees' innovative work behavior (Yeap, 2024; Xu et al., 2022). Employees driven by intrinsic motivation continuously seek new and improved methods in their work (Herbiyanti, 2024). Highly intrinsically motivated employees tend to show enhanced cognitive flexibility and sustained effort, which increases their chances of producing creative and unconventional solutions. In educational management contexts, intrinsic motivation has been shown to be positively linked to teachers' innovative work behavior (Chen and Pongtornkulpanich, 2024).

According to COR theory, individuals facing persistent stressors tend to adopt resource protection strategies by reducing discretionary effort and motivational investment to prevent further resource depletion (Verwaeren and Nijstad, 2024). As a core motivational resource, intrinsic motivation is particularly vulnerable to excessive job demands. Technostress functions as a disruptive stressor that induces frustration and anxiety, thereby undermining psychological engagement and weakening intrinsic motivation (Boyer-Davis et al., 2023; Hessari et al., 2024). Empirical evidence suggests that technostress is negatively associated with work motivation across professional and educational settings (Hessari and Nategh, 2022). Similarly, role overload, as a salient resource threat, can trigger negative psychological states and suppress employees' intrinsic motivation by diminishing their sense of autonomy and task enjoyment (Huo and Jiang, 2023).

By eroding teachers' intrinsic motivation, technostress and role overload are likely to indirectly inhibit innovative work behavior. Therefore, intrinsic motivation serves as a key motivational mechanism through which job demands shape teachers' innovative work behavior.

H_7: Technostress has a negative effect on teachers' intrinsic motivation.
H_8: Role overload has a negative effect on teachers' intrinsic motivation.
H_9: Intrinsic motivation has a positive effect on teachers' innovative work behavior.
H_{10a}: Intrinsic motivation mediates the relationships between technostress and teachers' innovative work behavior.
H_{10b}: Intrinsic motivation mediates the relationships between role overload and teachers' innovative work behavior.

Technostress and role overload

Existing research identifies technostress as a significant antecedent that reshapes work processes and role expectations, leading to a direct increase in perceived role stress (Tarafdar et al., 2007). This positive relationship is primarily driven by the complexity and rapid renewal of information and communication technologies (ICT), which create a skill discrepancy and compel employees to devote excessive time—often extending into personal rest hours—to learning and troubleshooting new systems (Wang and Shu, 2008). These accompanying tasks, such as frequent software updates and extensive information management, often do not directly address core job requirements and thus intensify perceptions of being overwhelmed by excessive responsibilities (Zhang et al., 2025). Moreover, the capacity of ICT to quantify and continuously monitor work outcomes generates relentless organizational expectations for efficiency, fostering a compulsive sense that more must be accomplished within increasingly compressed timeframes (Tarafdar et al., 2007; Wang and Shu, 2008). The resulting demands for constant multitasking and rapid information processing across multiple channels consume vital cognitive and emotional resources, ultimately leading to severe task overload. Consequently, in higher vocational education contexts, when work demands persistently exceed teachers' available time and energy, technostress initiates a process of resource depletion that directly intensifies higher vocational teachers' perceived role overload.

H_{11}: Technostress has a positive effect on teachers' role overload.

The conceptual model of this study is shown in Figure 1.

METHODOLOGY

Participants and data collection

This study targeted full-time teachers employed at six higher vocational colleges in Heilongjiang Province, China. These institutions were undergoing digital transformation and promoting industry-education integration as part of ongoing vocational education reforms. In this context, teachers were expected not only to incorporate digital teaching platforms and emerging educational technologies into their instructional practices but also to assume additional responsibilities related to curriculum reform, skills-oriented training, student internship supervision, and collaboration with enterprises. Such institutional characteristics place relatively high technological and role demands on teachers, making higher vocational colleges an appropriate setting for examining technostress, role overload, and teachers' innovative work behavior. A convenience sampling approach was adopted to recruit teachers who were willing and able to participate in the survey (Creswell, 2014), given the accessibility constraints and the voluntary nature of participation. Data were collected between July and October 2025 using Wenjuanxing, a widely used professional online survey platform in China. A total of 650 questionnaires were distributed, and 607 were returned. After excluding 26 invalid responses, 581 valid questionnaires were retained for final data analysis, yielding a valid response rate of

89.4%. Prior to participation, all respondents provided written informed consent, and participation was entirely voluntary. The study was conducted in accordance with the principles of the Declaration of Helsinki and received ethical approval from the Ethics Committee of Mahachulalongkornrajavidyalaya University (1 July 2025, R. 466/2025).

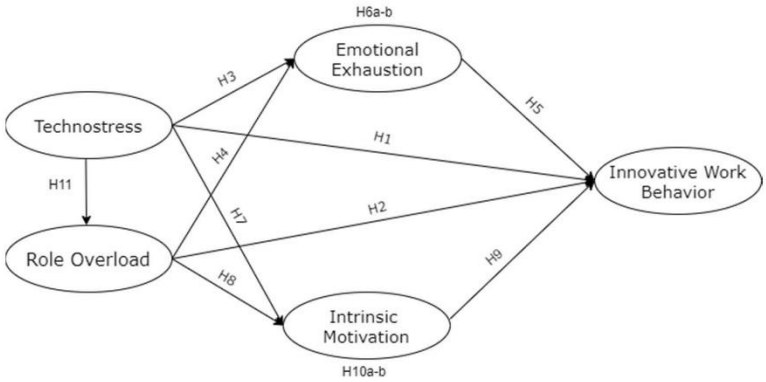

Figure 1. The conceptual model.

Table 1 presents an overview of the respondents' demographic characteristics. Of the sample, 61.96% were female teachers, while males accounted for 38.04%. The majority of participants were aged between 31 and 50 years. Regarding teaching experience, 48.88% reported more than 10 years, and 28.06% had 6 to 10 years. With respect to academic rank, lecturers constituted the largest group (39.93%), followed by associate professors (38.04%). The majority of participants held a master's degree (70.05%), with 21.51% holding a bachelor's degree and 6.88% a doctoral degree. In addition, 76.94% of the respondents occupied non-managerial positions, whereas 23.06% reported holding managerial roles.

Measure

The measurement items were based on internationally validated scales and were carefully adapted to reflect the Chinese vocational education setting. To ensure linguistic and conceptual equivalence, the original English-language items underwent a rigorous translation and back-translation process.

Technostress scale

Technostress was measured using a 5-item adapted version of the Technostress Creators Scale developed by Sharma et al. (2025). All items were rated on a 7-point Likert scale ranging from 1 (strongly disagree) to 7 (strongly agree). A sample item is "I am forced by new teaching technologies to work much faster." In the present study, the scale exhibited satisfactory internal reliability, with a Cronbach's alpha coefficient of 0.889.

Role overload scale

Role overload was measured using the 5-item scale developed by Peterson et al. (1995). Responses were recorded on a 5-point Likert scale ranging from 1 (strongly disagree) to 5 (strongly agree). A sample item is "I feel overburdened in my role." In the present study, the scale achieved adequate internal consistency, with a Cronbach's α value of 0.882.

Emotional exhaustion scale

Emotional exhaustion was measured using the 9-item Emotional Exhaustion subscale of the Maslach Burnout Inventory-Educators Survey (MBI-ES) developed by Maslach et al. (1981). All items were rated on a 5-point Likert scale ranging from 1 (strongly disagree) to 5 (strongly agree). A sample item is "I feel emotionally drained from my work." The scale has demonstrated good reliability with a Cronbach's alpha of 0.908.

Table 1. The demographic profile of the respondents (N = 581).

Variable	Category	Frequency	Percentage
Gender	Male	221	38.04%
	Female	360	61.96%
Age	21-30	93	16.01%
	31-40	186	32.01%
	41-50	209	35.97%
	51 above	93	16.01%
Tenure	<1	6	1.03%
	1-5	128	22.03%
	6-10	163	28.06%
	>10	284	48.88%
Academic ranks	Assistant Lecturer	58	9.98%
	Lecturer	232	39.93%
	Associate Professor	221	38.04%
	Professor	70	12.05%
Education level	Associate Degree	6	1.03%
	Bachelor's Degree	128	21.51%
	Master's Degree	407	70.05%
	Doctor's Degree	40	6.88%
Management position	Yes	134	23.06%
	No	447	76.94%

Intrinsic motivation scale

Intrinsic motivation was measured using the 5-item scale developed by Tierney et al. (1999). All items were rated on a 5-point Likert scale ranging from 1 (strongly disagree) to 5 (strongly agree). A sample item is "I enjoy coming up with new ideas for curriculum design or teaching activities." The scale demonstrated good internal consistency in the present study with a Cronbach's alpha of 0.882.

Innovative work behavior scale

Teachers' innovative work behavior (IWB) was assessed using the 10-item measurement scale designed by Afsar (2021). Participants responded using a 7-point Likert scale, where 1 indicated "strongly disagree" and 7 indicated "strongly agree". An example item stated, "I search out new teaching methods, techniques, or tools." The reliability of the scale was satisfactory, with a Cronbach's alpha coefficient of 0.926.

As shown in Table 2, all constructs demonstrated satisfactory reliability and convergent validity, with Cronbach's alpha, CR, and AVE values exceeding recommended thresholds (Fornell and Larcker, 1981; Hair et al., 2019).

Table 2. Validity and reliability of the scales.

Variables	Number of items	Cronbach's alpha	AVE	CR
Technostress	5	0.889	0.619	0.890
Role overload	5	0.882	0.603	0.883
Emotional exhaustion	9	0.908	0.525	0.908
Intrinsic motivation	5	0.882	0.601	0.883
Innovative work behavior	10	0.926	0.556	0.926

Note: AVE: average variance extracted; CR: composite reliability.

Data analysis

Statistical analyses were performed using SPSS Statistics 26.0 and AMOS 26.0. Initial analyses included descriptive statistics to summarize the characteristics of the study variables, followed by Pearson correlation analyses to explore their interrelationships. A Harman's single-factor test was conducted to evaluate the potential influence of common method variance. The measurement model was then assessed through confirmatory factor analysis (CFA) to examine the adequacy of the latent constructs. Several goodness-of-fit indices—namely χ^2/df, RMSEA, CFI, and TLI—were used to determine overall model fit. Structural equation modeling (SEM) was applied to test the hypothesized relationships among the constructs. Indirect effects were assessed using a bias-corrected bootstrapping approach with 5,000 resampling iterations.

RESULTS

Descriptive statistics

Table 3 presents the means, standard deviations, and intercorrelations among the study variables. Overall, the descriptive statistics indicate adequate variability across constructs, with mean values ranging from 3.398 to 5.194 and standard deviations between 0.729 and 1.442, suggesting no severe restriction of range. Pearson correlation analyses indicated that the study variables were significantly interrelated, with all correlations reaching statistical significance at the 0.001 level. Technostress and role overload were positively correlated with emotional exhaustion and negatively correlated with intrinsic motivation and innovative work behavior. In addition, intrinsic motivation demonstrated a strong positive correlation with innovative work behavior, while emotional exhaustion was strongly and negatively correlated with innovative work behavior. Furthermore, the square roots of the average variance extracted (AVE), reported on the diagonal of Table 3, ranged from 0.725 to 0.787 and exceeded the corresponding inter-construct correlations. This pattern provides support for discriminant validity in accordance with the Fornell–Larcker criterion. The observed correlation pattern is consistent with the hypothesized relationships and provides an appropriate basis for subsequent structural equation modeling analyses.

Table 3. Descriptive statistics and correlation matrix.

Variables	M	SD	TS	RO	EE	IM	IWB
TS	4.541	1.442	**0.787**				
RO	3.496	0.815	.426***	**0.777**			
EE	3.513	0.729	.579***	.571***	**0.725**		
IM	5.193	1.346	-.495***	-.413***	-.473***	**0.775**	
IWB	5.054	1.195	-.553***	-.545***	-.631***	.644***	**0.746**

Note: M = mean; SD = standard deviation. TS = Technostress; RO = Role overload; EE = Emotional exhaustion; IM = Intrinsic motivation; IWB = Innovative work behavior. N=581, ***: $p<0.001$, and the diagonal brackets are the square root of AVE value.

Common method bias test

To reduce the potential impact of common method bias, anonymity was guaranteed during the data collection process. As all five study variables were measured using self-report questionnaires completed by teachers, the possibility of common method variance could not be completely excluded. To preliminarily assess this issue, Harman's single-factor test was conducted by performing an unrotated principal component analysis on all measurement items. The results indicated that five factors had eigenvalues greater than one, and the first factor accounted for 41.242% of the total variance, which is below the recommended threshold of 50% (Podsakoff et al., 2003). These results suggest that common method variance is unlikely to substantially bias the observed relationships in the present study.

Confirmatory factor analysis

Confirmatory factor analyses (CFAs) were performed prior to hypothesis testing to evaluate the discriminant validity of the constructs. As shown in Table 4, the hypothesized five-factor model—including technostress, role overload, emotional exhaustion, intrinsic motivation, and innovative work behavior—exhibited a good fit to the data (χ^2/df = 1.226, CFI = 0.990, TLI = 0.989, RMSEA = 0.020). To further examine discriminant validity, the five-factor model was compared with a series of theoretically plausible alternative nested models in which conceptually related constructs were combined. All alternative models showed substantially poorer fit, as indicated by higher χ^2/df values, lower CFI and TLI values, and higher RMSEA values. Chi-square difference tests revealed that each alternative model fit the data significantly worse than the baseline

model ($\Delta\chi^2$ ranged from 1021.595 to 3157.899 with Δdf ranging from 5 to 11, all $p < .001$). These results provide strong support for the discriminant validity of the constructs and further alleviate concerns regarding construct distinctiveness.

Table 4. Model fit results of confirmatory factor analyses.

Model	X^2/df	CFI	TLI	RMSEA	Model comparison	Δx^2	Δdf
1.Five Factors: TS, RO, EE, IM, IWB (baseline model)	1.226	0.990	0.989	0.020	—	—	—
2.Four Factors: TS+ RO, EE, IM, IWB	3.178	0.901	0.893	0.061	2vs1	1021.595	4
3.Three Factors: TS+RO, EE+IM, IWB	5.085	0.812	0.799	0.084	3vs1	2030.762	7
4.Two Factors: TS+RO+EE+IM, IWB	5.809	0.778	0.763	0.091	4vs1	2421.389	9
5. Single Factor: TS+RO+EE+ IM+IWB	7.195	0.714	0.695	0.103	5vs1	3157.899	10

Note: Δ reflects the variation from the measurement model, χ^2/df = chi-square divided by degrees of freedom; RMSEA = Root Mean Square Error of Approximation, CFI = Comparative Fit Index, TLI = Tucker–Lewis Index. TS = Technostress; RO = Role overload; EE = Emotional exhaustion; IM = Intrinsic motivation; IWB = Innovative work behavior.

SEM analysis

To test the proposed model, structural equation modeling (SEM) was carried out in AMOS, adopting maximum likelihood estimation as the method of parameter estimation. The results indicated a good model fit:$\chi^2(518) = 642.776$, $p < 0.001$, $\chi^2/df = 1.241$, CFI = 0.989, TLI = 0.988, RMSEA = 0.02, GFI = 0.940, and AGFI=0.932. These values met the recommended thresholds, suggesting a good overall model fit. All standardized path coefficients, along with their statistical significance and 95% bias-corrected confidence intervals, were estimated using a bootstrap technique performed with 5,000 iterations.

Direct effects

With satisfactory overall model fit established, the hypothesized direct relationships were examined. Table 5 reports the standardized direct effects among the latent variables, which were also depicted in Figure 2.

Regarding job demands, technostress exerted a significant negative impact on innovative work behavior ($\beta = -0.098$, $p = .036$), thereby supporting H1. Role overload was also negatively associated with innovative work behavior ($\beta = -0.116$, $p < .001$), supporting H2. In addition, technostress had a significant positive effect on emotional exhaustion ($\beta=0.446$, $p < .001$), supporting H3, while role overload further increased emotional exhaustion ($\beta=0.427$, $p < .001$), supporting H4. Emotional exhaustion, in turn, showed a significant negative effect on IWB ($\beta = -0.301$, $p < .001$), providing support for H5. With respect to motivational pathways, technostress was found to significantly reduce intrinsic motivation ($\beta = -0.441$, $p < .001$), supporting H7, and role overload also negatively predicted intrinsic motivation ($\beta = -0.263$, $p < .001$), supporting H8. Intrinsic motivation was positively related to IWB ($\beta = 0.431$, $p < .001$), thus supporting H9. Finally, technostress had a significant positive effect on role overload ($\beta = 0.479$, $p < .001$), providing support for H11.

Table 5. Standardized direct effects with 95% confidence intervals.

Hypothesis	Path	β	S.E.	C.R.	*p*	Results
H1	TS→IWB	-0.098	0.041	-2.097	0.036	Supported
H2	RO→IWB	-0.116	0.061	-3.795	<.001	Supported
H3	TS→EE	0.446	0.025	9.614	<.001	Supported
H4	RO→EE	0.427	0.038	9.362	<.001	Supported
H5	EE→IWB	-0.301	0.085	-5.829	<.001	Supported
H7	TS→IM	-0.441	0.051	-8.701	<.001	Supported
H8	RO→IM	-0.263	0.074	-5.517	<.001	Supported
H9	IM→IWB	0.431	0.040	9.481	<.001	Supported
H11	TS→RO	0.479	0.031	9.921	<.001	Supported

Note: TS = Technostress; RO = Role overload; EE = Emotional exhaustion; IM = Intrinsic motivation; IWB = Innovative work behavior. Estimates are standardized coefficients. S.E. = standard error; C.R. = critical ratio. β= standardized coefficient.

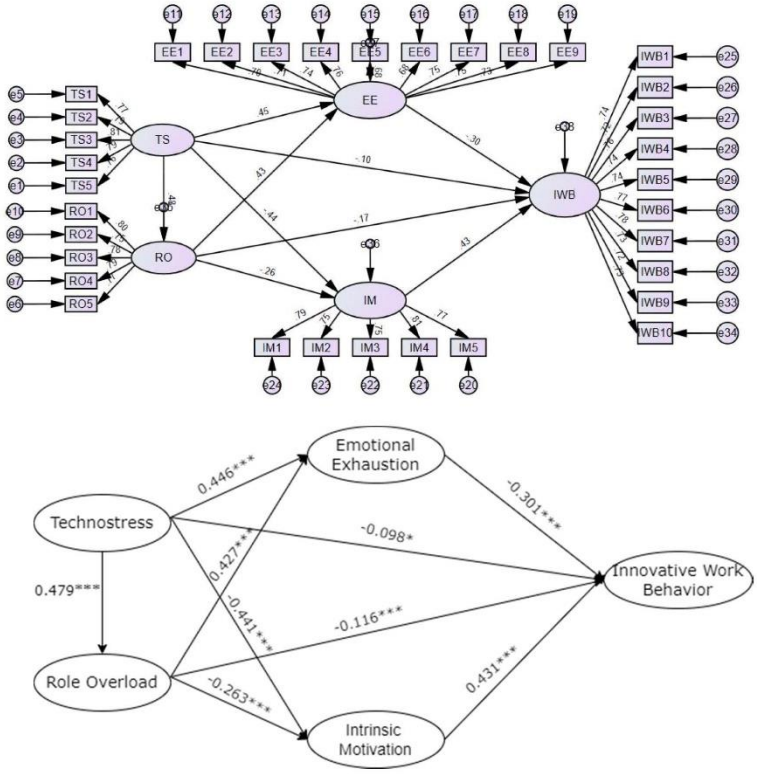

Figure 2. Structural equation model of the hypothesized relationships.

Indirect effects

This study employed structural equation modeling (SEM) to examine whether emotional exhaustion (EE) and intrinsic motivation (IM) mediate the relationships between job demands—technostress (TS) and role overload (RO)—and innovative work behavior (IWB). To test the proposed mediation effects, bias-corrected bootstrap analyses with 5,000 resamples were conducted. An indirect effect was considered statistically significant when the 95% bias-corrected bootstrap confidence interval (CI) did not include zero. Table 6 reports the standardized indirect and total effects of technostress and role overload on innovative work behavior, together with their corresponding 95% bootstrap confidence intervals. The results provide consistent evidence that emotional exhaustion and intrinsic motivation function as parallel mediators linking job demands to innovative work behavior.

With respect to technostress, significant negative indirect effects on innovative work behavior were observed through both mediators. Specifically, technostress exerted a negative indirect effect on IWB via emotional exhaustion (β = −0.119, 95% CI [−0.170, −0.083], $p < .001$) and via intrinsic motivation (β = −0.169, 95% CI [−0.231, −0.125], $p < .001$). In both mediation pathways, the total effects of technostress on IWB remained statistically significant (β = −0.206 and β = −0.256, respectively; $p < .001$), indicating partial mediation. Similarly, role overload demonstrated significant negative indirect effects on innovative work behavior through emotional exhaustion and intrinsic motivation. The indirect effect of role overload on IWB via emotional exhaustion was significant (β = −0.178, 95% CI [−0.250, −0.122], $p < .001$). In addition, role overload also

showed a significant indirect effect on IWB through intrinsic motivation (β = −0.157, 95% CI [−0.230, −0.097], p < .001). The corresponding total effects remained significant (β = −0.407 and β = −0.387, respectively; p < .001), further supporting a pattern of partial mediation. Thus, H6a, H6b, H10a and H10b were all supported. Overall, these findings indicate that technostress and role overload undermine innovative work behavior indirectly by increasing emotional exhaustion and reducing intrinsic motivation. Emotional exhaustion and intrinsic motivation thus represent two distinct but complementary psychological pathways through which job demands influence employees' innovative work behavior.

Table 6. Standardized indirect and total effects with 95% confidence intervals.

Pathway	Indirect effect (β)	95% confidence interval		p	Total Effect (β)	95% confidence interval		p
		LLCI	ULCI			LLCI	ULCI	
TS→EE→IWB	-0.119	-0.170	-0.083	***	-0.206	-0.289	-0.126	***
TS→IM→IWB	-0.169	-0.231	-0.125	***	-0.256	-0.350	-0.174	***
RO→EE→IWB	-0.178	-0.250	-0.122	***	-0.407	-0.534	-0.298	***
RO→IM→IWB	-0.157	-0.230	-0.097	***	-0.387	-0.525	-0.260	***

Note: n = 581. p < 0.001. Effects are standardized. LLCI = Lower Limit Confidence Interval; ULCI = Upper Limit Confidence Interval. EE = Emotional Exhaustion; IM = Intrinsic Motivation; TS = Technostress; RO = Role Overload. IWB = Innovative Work Behavior.

DISCUSSION

Discussion of main findings

This study developed and empirically tested an integrative model to explain how job demands such as technostress and role overload impact innovative work behavior (IWB) among teachers in higher vocational colleges through psychological mechanisms such as emotional exhaustion and intrinsic motivation. Drawing on the JD-R model and COR theory, the findings provided a comprehensive understanding of how innovation among higher vocational teachers is constrained.

Consistent with Hypotheses 1 and 2, both technostress and role overload exerted significant negative effects on innovative work behavior. These findings confirmed that excessive technological demands and accumulated role responsibilities function primarily as hindrance stressors in the vocational education context. The findings are in line with previous studies, which found that technostress depleted cognitive and emotional resources, undermined self-efficacy, and weakened individuals' capacity for innovation (Tarafdar et al., 2007; Zhang, 2023; Hamid, 2024). Similarly, role overload has been widely identified as a key source of strain that suppresses discretionary and proactive behaviors such as innovation (Tang and Vandenberghe, 2021). However, the negative effects observed in this study contrast with findings from high-autonomy or high-skill occupational settings, where moderate levels of technostress or role overload may act as challenge stressors that stimulate innovation (Clarke and Higgs, 2020; Forza et al., 2023). This divergence highlighted the context-dependent nature of stressor–innovation relationships. In higher vocational colleges, where teachers face persistent professional demands rooted in institutional governance, performance expectations, and evolving skill requirements, job demands are more likely to be perceived as depleting rather than motivating. This study thus demonstrated that identical stressors can yield different innovation outcomes depending on occupational context.

Consistent with Hypotheses 3 and 4, technostress and role overload were found to positively influence emotional exhaustion. This finding aligns with previous studies demonstrating that technological and role demands impose significant psychological burdens across occupations (Michalik and Schermuly, 2023; Li et al., 2025; Kacmar et al., 2020; Alyamy and Cheong, 2020; Rafique, 2023). Drawing on the JD-R model, technostress and role overload can be conceptualized as a set of job demands that deplete cognitive and emotional resources over time, leading to fatigue, frustration, and emotional strain. For higher vocational teachers, the combination of digital transformation pressures and multiple role responsibilities highlights the relevance of these mechanisms. The findings also indicated a negative effect of emotional exhaustion on IWB, supporting H5. Teachers experiencing emotional depletion are less likely to engage in innovation, consistent with COR theory that individuals protect remaining resources by withdrawing from effortful and uncertain tasks (Samma et al., 2020). Hypotheses H6a-b confirmed that emotional exhaustion mediated the relationships between technostress, role overload and IWB. This pattern aligned with the JD-R model and COR theory, highlighting emotional exhaustion as a critical mechanism through which both demands influence innovative work behavior.

Consistent with Hypothesis 7, this study found that technostress has a significant negative impact on vocational college teachers' intrinsic motivation. This result

aligns with existing literature highlighting the detrimental effects of technostress on employees' psychological and motivational states. Empirical evidence from various contexts supports this finding. Hessari and Nategh (2022) reported a significant negative correlation between technostress and work motivation among engineering professionals. Similarly, Boyer-Davis (2023) found that technostress reduced motivation for online teaching among higher education faculty. These studies demonstrate that heightened technostress can erode individuals' willingness to engage in meaningful work. Moreover, research has consistently linked technostress with broader negative outcomes such as burnout, reduced job satisfaction, diminished organizational commitment, decreased productivity, and increased turnover intentions (Jena, 2015; Hessari et al., 2024; Tarafdar et al., 2007; Sharma et al., 2025). As these negative states accumulate, they undermine intrinsic motivation by diminishing enjoyment, interest, and engagement with work tasks.

The results of this study provide empirical evidence that role overload exerts a significant negative influence on intrinsic motivation, supporting H8. One primary mechanism for this negative relationship is explained through the COR theory. According to this framework, individuals strive to obtain and protect valued psychological and physical resources (Hobfoll, 2018). Role overload serves as a primary source of resource drain, so that as job requirements exceed an individual's expectations, they fall into a "vicious spiral" of fatigue and mental exhaustion. To protect their remaining energy, employees often withdraw emotionally from their work (Thomas, 2009), thereby sacrificing the internal drive and curiosity that define intrinsic motivation. Empirical evidence has shown that excessive demands may erode employees' interest-driven engagement, reduce passion for work and creative behavior (De Clercq and Belausteguigoitia, 2018). From a role stress perspective, role overload creates feelings of time pressure and loss of control, which impede individuals' ability to experience enjoyment and inherent satisfaction in their work. The present findings indicated that when teachers are confronted with excessive role expectations and workload demands, their intrinsic motivation is significantly weakened, highlighting the motivational costs of role overload. By directly examining the link between role overload and intrinsic motivation, the present study extends existing research by clarifying how role overload operates not only as a stressor but also as a motivational inhibitor. This finding underscores the importance of managing role demands to preserve teachers' intrinsic motivation and sustain innovative work behaviors.

Theoretical implications

This study offers meaningful theoretical contributions to the literature on job demands and innovative work behavior by integrating the JD-R model with COR theory. First, this research extends the JD–R framework by empirically identifying technostress and role overload as salient hindrance job demands in the context of higher vocational education, demonstrating that digitally driven and role-related pressures jointly undermine teachers' innovative work behavior. This finding helps clarify the mixed evidence in prior stressor–innovation research by showing that, under conditions of rapid technological change and limited autonomy, job demands are more likely to deplete resources than stimulate innovation. Second, this study advances COR theory by revealing emotional exhaustion and intrinsic motivation as two parallel, resource-based mechanisms through which job demands constrain innovative behavior. Emotional exhaustion reflects the depletion of emotional and cognitive resources, while reduced intrinsic motivation captures teachers' withdrawal of discretionary effort to conserve remaining resources. By simultaneously modeling health impairment and motivational loss pathways, this study provides a more nuanced explanation of how innovation is suppressed, beyond direct stress effects. Finally, by conceptualizing innovative work behavior as a resource-intensive and discretionary activity, this study contributes to educational innovation literature by shifting attention from enabling conditions to psychological constraints. The findings underscore that innovation failure among vocational teachers may stem not from insufficient capability or willingness, but from sustained resource loss caused by excessive job demands, thereby enriching theoretical understanding of innovation under pressure in technology-intensive educational settings.

Practical implications

The findings of this study also provide important practical implications for policy makers, educational administrators, and teachers in the higher vocational education sector. The findings suggested that managing stress-related job demands is a critical prerequisite for promoting teachers' innovation. Excessive technostress can be reduced through systematic technical training, reliable technical support, and clearly defined expectations regarding technology use, which together help lower uncertainty and cognitive overload. Similarly, administrators are encouraged to clarify roles and responsibilities to ensure employees are not "off-tracked" by unrealistic expectations. By ensuring that task assignments align with professional role norms, colleges can prevent the "stress-as-disrespect" that occurs when employees are overwhelmed by illegitimate tasks. Role overload can be mitigated by streamlining administrative procedures, optimizing workload allocation, and granting teachers greater autonomy in instructional and innovation-related activities. By conserving teachers' psychological and

energetic resources, these practices create the necessary conditions for innovative work behavior to emerge. Higher vocational colleges should adopt a dual-path strategy that simultaneously prevents emotional exhaustion and stimulates intrinsic motivation. Emotional risk can be addressed through proactive measures such as mental health screening, confidential counseling, and flexible workload policies. At the same time, intrinsic motivation should be cultivated by embedding meaning, autonomy, and opportunities for competence-building into teaching and research processes. Strategies such as growth-oriented feedback, process-based performance evaluation, and task variety can help sustain motivation even under increasing job demands. The implications also extend to educational governance and policy design. Reducing excessive non-instructional burdens, providing targeted funding for pedagogical and technological innovation, and aligning evaluation and promotion systems with innovation-oriented goals can create a more supportive institutional context for teachers' innovation.

Limitations and future research

This study has several limitations that suggest directions for future research. First, the sample was drawn exclusively from higher vocational colleges in Heilongjiang Province, China. Regional differences in socio-economic conditions, educational governance, and policy environments may limit the generalizability of the findings. Future studies could extend the sampling scope to other regions, institutional types, or national contexts to test the robustness and boundary conditions of the proposed relationships. Second, this study employed a cross-sectional research design, which restricts the ability to draw causal inferences among the study variables. Future research could adopt longitudinal or time-lagged designs to better capture the dynamic relationships among technostress, role overload, emotional exhaustion, intrinsic motivation, and innovative work behavior over time. Third, all variables were measured using self-reported questionnaires, which may increase the risk of common method bias despite the application of procedural and statistical remedies. Future studies could incorporate multi-source data, such as peer ratings, supervisor evaluations, or objective performance indicators, to reduce bias and improve accuracy. Fourth, the conceptual model focused primarily on job demands, while other potentially relevant job resources were not included, which may limit the explanatory power of the model. Future research could incorporate job resources into this model, such as digital leadership, organizational flexibility, psychological resilience, or learning goal orientation, and to examine potential moderating conditions under which stressors may be perceived as more challenging or hindering, thereby providing a more nuanced understanding of innovative work behavior in educational contexts.

CONCLUSIONS

Grounded in the Job Demands–Resources and Conservation of Resources theories, this study examines innovative work behavior among higher vocational college teachers in China. The results show that technostress and role overload primarily function as hindrance stressors that undermine teachers' innovative work behavior in higher vocational education. By examining emotional exhaustion and intrinsic motivation as parallel mediators, the study reveals the coexistence of health impairment and motivational pathways underlying teachers' innovative work behavior. Overall, this research offers valuable theoretical and practical insights for educational management in fostering teachers' innovation in high-pressure work environments.

Conflict of interest

The authors declare no conflicts of interest.

Institutional review board statement

The study was conducted in accordance with the principles of the Declaration of Helsinki. Approval was granted by the Ethics Committee of Mahachulalongkornrajavidyalaya University (1 July 2025, R. 466 / 2025).

REFERENCES

Abdou, A. H. et al. (2024). Work stress, work–family conflict, and psychological distress among resort employees: A JD-R model and spillover theory perspectives. *Frontiers in Psychology*, *15*, 1326181. https://doi.org/10.3389/fpsyg.2024.1326181

Afsar, B., Al-Ghazali, B. M., Cheema, S., & Javed, F. (2021). Cultural intelligence and innovative work behavior: The role of work engagement and interpersonal trust. *European Journal of Innovation Management*, *24*(4), 1082-1109. https://doi.org/10.1108/EJIM-01-2020-0008

AlEssa, H. S., & Durugbo, C. M. (2022). Systematic review of innovative work behavior concepts and contributions. *Management Review Quarterly, 72*(4), 1171–1208. https://doi.org/10.1007/s11301-021-00224-x.

Alvarez-Risco, A., Del-Aguila-Arcentales, S., Yáñez, J. A., Rosen, M. A., & Mejia, C. R. (2021). Influence of technostress on academic performance of university medicine students in Peru during the COVID-19 pandemic. *Sustainability, 13*(16), 8949. https://doi.org/10.3390/su1316894

Alyamy, K. F., & Cheong, L. S. (2020). Role ambiguity, conflict and overload as predictors of emotional exhaustion: The mediation effect of teaching satisfaction and affective commitment. *International Journal of Education, Psychology and Counseling, 5*(36), 37–55. https://doi.org/10.35631/IJEPC.536004

Anjum, A., & Zhao, Y. (2022). The impact of stress on innovative work behavior among medical healthcare professionals. *Behavioral Sciences, 12*(9), Article 340. https://doi.org/10.3390/bs12090340

Apenteng, B. A., Boakye, K. G., & Opoku, S. T. (2022). A moderated moderation analysis of perceived adaptivity and organizational support for innovation in the relationship between role overload and emotional exhaustion. *Health Care Management Review, 47*(3), 245-253. https://doi.org/10.1097/HMR.0000000000000328

Bail, C., Harth, V., & Mache, S. (2023). Digitalization in urology—A multimethod study of the relationships between physicians' technostress, burnout, work engagement and job satisfaction. *Healthcare, 11*(11), 2255. https://doi.org/10.3390/healthcare11112255

Bakker, A. B., & de Vries, J. D. (2021). Job demands–resources theory and self-regulation: New explanations and remedies for job burnout. *Anxiety, Stress, and Coping, 34*(1), 1-21. https://doi.org/10.1080/10615806.2020.1797695

Bakker, A. B., Demerouti, E., & Sanz-Vergel, A. (2023). Job demands–resources theory: Ten years later. *Annual Review of Organizational Psychology and Organizational Behavior, 10*(1), 25–53. https://doi.org/10.1146/annurev-orgpsych-120920-053933

Bourlakis, M., Nisar, T. M., & Prabhakar, G. (2023). How technostress may affect employee performance in educational work environments. *Technological Forecasting and Social Change, 193*, 122674. https://doi.org/10.1016/j.techfore.2023.122674

Boyer-Davis, S., Berry, K., & Cooper, A. (2023). The effect of technostress on the motivation to teach online in higher education before and during the COVID-19 pandemic: Perceptions of business faculty. *International Journal for Business Education, 165*(1), Article 5. https://doi.org/10.30707/IJBE165.1.1690384197.882912

Califf, C. B., & Brooks, S. (2020). An empirical study of techno-stressors, literacy facilitation, burnout, and turnover intention as experienced by K-12 teachers. *Computers & Education, 157*, Article 103971. https://doi.org/10.1016/j.compedu.2020.103971

Chandra, S., Shirish, A., & Srivastava, S. C. (2019). Does technostress inhibit employee innovation? Examining the linear and curvilinear influence of technostress creators. *Communications of the Association for Information Systems, 44*(1), 19. https://doi.org/10.17705/1CAIS.04419

Chen, C., & Pongtornkulpanich, A. (2024). Motivation, knowledge sharing, and innovative work behaviors of university teachers. *Journal of System and Management Sciences, 14*(4), 86–104. https://doi.org/10.33168/JSMS.2024.0406

Chen, Q., & Li, Z. (2024). Exploring the impact of workload variation on job burnout among teachers in higher vocational colleges: A job demand resource theory perspective. *Educational Administration: Theory and Practice, 30*(5), 7678-7685. https://doi.org/10.53555/kuey.v30i5.4222

Chung, Y. W., Park, J. H., & Yun, J. K. (2022). Can role overload result in positive outcomes? The relationships between role overload, psychological empowerment, organizational-based self-esteem, and task performance. *Korean Journal of Business Administration, 35*(8), 1479–1502. https://doi.org/10.18032/kaaba.2022.35.8.1479

Clarke, N., & Higgs, M. (2020). Political Skill and Role Overload as Antecedents of Innovative Work Behavior in the Public Sector. *Public Personnel Management, 49*(3), 444–469. https://doi.org/10.1177/0091026019863450

Consiglio, C., Massa, N., Sommovigo, V., & Fusco, L. (2023). Techno-stress creators, burnout and psychological health among remote workers during the pandemic: The moderating role of e-work self-efficacy. *International Journal of Environmental Research and Public Health, 20*(9), 7051. https://doi.org/10.3390/ijerph20097051

Creswell, J. W. (2014). *Research design: Qualitative, quantitative, and mixed methods approaches* (4th ed.). Sage Publications.

De Clercq, D., & Belausteguigoitia, I. (2018). Reducing the harmful effect of work overload on creative behaviour: Buffering roles of energy-enhancing resources. *Creativity and Innovation Management, 27*(4), 387–405. https://doi.org/10.1111/caim.12278

Demerouti, E., & Bakker, A. B. (2023). Job demands-resources theory in times of crises: New propositions. *Organizational Psychology Review, 13*(3), 209–236. https://doi.org/10.1177/20413866221135022

Demerouti, E., Bakker, A. B., Nachreiner, F., & Schaufeli, W. B. (2001). The job demands–resources model of burnout. *Journal of Applied Psychology, 86*(3), 499–512. https://doi.org/10.1037/0021-9010.86.3.499

Edú-Valsania, S., Laguía, A., & Moriano, J. A. (2022). Burnout: A review of theory and measurement. *International Journal of Environmental Research and Public Health, 19*(3), 17804. https://doi.org/10.3390/ijerph192317804

Fornell, C., & Larcker, D. F. (1981). Evaluating structural equation models with unobservable variables and measurement error. *Journal of Marketing Research, 18*(1), 39–50.https://doi.org/10.1177/002224378101800104

Forza, A. G., & Nugroho, S. P. (2023). The influence of remote work on innovative work behavior with work–life balance and technostress as moderating variables. *Proceedings of the International Conference on Digital Advanced Tourism, Management and Technology, 1*(1), 457–466. https://doi.org/10.56910/ictmt.v1i1.89

Galanakis, M. D., & Tsitouri, E. (2022). Positive psychology in the working environment. Job demands-resources theory, work engagement and burnout: A systematic literature review. *Frontiers in Psychology, 13*, Article 1022102. https://doi.org/10.3389/fpsyg.2022.1022102

Gkontelos, A., Vaiopoulou, J., & Stamovlasis, D. (2023). Teachers' innovative work behavior as a function of self-efficacy, burnout, and irrational beliefs: A structural equation model. European Journal of Investigation in Health, *Psychology and Education, 13*(2), 403–418. https://doi.org/10.3390/ejihpe13020030

Hair, J. F., Jr., Risher, J. J., Sarstedt, M., & Ringle, C. M. (2019). When to use and how to report the results of PLS-SEM. *European Business Review*, *31*(1), 2–24.https://doi.org/10.1108/EBR-11-2018-0203

Halbesleben, J. R. B., Neveu, J.-P., Paustian-Underdahl, S. C., & Westman, M. (2014). Getting to the "COR": Understanding the role of resources in conservation of resources theory. *Journal of Management, 40*(5), 1334–1364. https://doi.org/10.1177/0149206314527130

Hamid, M. (2024). Does technostress moderate between intention to use ICT and innovative behavior: Exploring antecedents of digital mindset. *Journal of Digitovation and Information System, 4*(1), 48–61. https://doi.org/10.54433/JDIS/2024/010037

Herbiyanti, F., Rahmawati, I., Hardjowikarto, D. A., & Suzana, A. (2024). The role of intrinsic motivation on innovative work behavior mediated by creative self-efficacy. *Journal Research of Social Science, Economics, and Management, 3*(12), 1687–1698. https://doi.org/10.59141/jrssem.v3i12.673

Hessari, H., & Nategh, T. (2022). The role of co-worker support for tackling technostress along with these influences on need for recovery and work motivation. *International Journal of Intellectual Property Management*, *12*(2). https://doi.org/10.1504/IJIPM.2022.122301

Hessari, H., Daneshmandi, F., & Nategh, T. (2024). Examining the impact of technostress on perceived organizational commitment: The mediating role of individual innovation. *International Journal of Business and Applied Economics, 3*(4), 803–824. https://doi.org/10.55927/ijbae.v3i4.9617

Hobfoll, S. E., Halbesleben, J., Neveu, J. P., & Westman, M. (2018). Conservation of resources in the organizational context: The reality of resources and their consequences. *Annual Review of Organizational Psychology and Organizational Behavior, 5*(1), 103-128. https://doi.org/10.1146/annurev-orgpsych-032117-104640

Hossain, K. A. (2023). Evaluation of technological breakthrough in global education and future employment opportunity. *Journal of Liberal Arts and Humanities, 4*(8), 1–62. https://doi.org/10.48150/jlah.v4no8.2023.a1

Huang, B., Ma, L., & Xia, W. (2021). The mixed effect of role overload on extra-role performance: The mediation role of behavioral inhibition system/behavioral activation system responses. *Frontiers in Psychology, 12*, 748732. https://doi.org/10.3389/fpsyg.2021.748732

Huo, M.-L., & Jiang, Z. (2023). Work-role overload, work–life conflict, and perceived career plateau: The moderating role of emotional stability. *Human Resource Management*. https://doi.org/10.1002/hrm.22167

Hurbean, L.; Dospinescu, O.; Munteanu, V.; Danaiata, D. (2022). Effects of Instant Messaging Related Technostress on Work Performance and Well-Being. *Electronics*, 11, 2535. https://doi.org/10.3390/electronics11162535

Jamal, A., Begum, S., Alam, H., & Hussain, T. (2023). Impact of perceived organizational support on innovative work behavior and burnout in teachers: Thriving at work as the mediator. *Journal of Education and Educational Development, 10*(2), 288–307. https://doi.org/10.22555/joeed.v10i2.815

Jena, R. K. (2015). Impact of technostress on job satisfaction: An empirical study among Indian academicians. *International Technology Management Review, 5*(3), 117–124. https://doi.org/10.2991/itmr.2015.5.3.1

Kacmar, K. M., Andrews, M. C., Valle, M., Tillman, C. J., & Clifton, C.

(2020). The interactive effects of role overload and resilience on family-work enrichment and associated outcomes. *The Journal of Social Psychology, 160*(5), 688–701. https://doi.org/10.1080/00224545.2020.1735985

Kang, B. (2025, April 22). *Vocational education needs revamp to make it fit for modernization.* China Daily. https://www.chinadaily.com.cn/a/202504/22/WS6806e2a1a3104d9fd3820b90.html

Koopman, J., Lanaj, K., & Scott, B. A. (2016). Integrating the bright and dark sides of OCB: A daily investigation of the benefits and costs of helping others. *Academy of Management Journal, 59*(2), 414–435. https://doi.org/10.5465/amj.2014.0262

Kwon, K., & Kim, T. (2020). An integrative literature review of employee engagement and innovative work behavior: Revisiting the JD-R model. *Human Resource Management Review, 30*(2), 100704. https://doi.org/10.1016/j.hrmr.2019.100704

Lackey, D., Szolosi, A. M., & Martin, B. (2025). Understanding what's at the "COR" of instructor burnout: A conservation of resources and job demands-resources perspective. *Journal of Outdoor Recreation, Education, and Leadership, 17*(1). https://doi.org/10.18666/JOREL-2025-12572

Lambriex-Schmitz, P., Van der Klink, M. R., Beausaert, S., Bijker, M., & Segers, M. (2020). When innovation in education works: Stimulating teachers' innovative work behaviour. *International Journal of Training and Development, 24*(2), 141–160. https://doi.org/10.1111/ijtd.12175

Lesener, T., Pleiss, L. S., Gusy, B., & Wolter, C. (2020). The study demands-resources framework: An empirical introduction. *International Journal of Environmental Research and Public Health, 17*(14), 5183. https://doi.org/10.3390/ijerph17145183

Li, Y., Li, J., Zhou, C., Peng, H., Luo, B., Hu, Y., & Fang, J. (2025). Unravelling the link between alexithymia and psychological distress in nurses: A multihospital cross-sectional study exploring the mediating roles of workplace conflict and emotional exhaustion. *BMC Psychiatry, 25*, 319. https://doi.org/10.1186/s12888-025-06742-2

Liang, X., Guo, G., Shu, L., Gong, Q., & Luo, P. (2022). Investigating the double-edged sword effect of AI awareness on employee's service innovative work behavior. *Tourism Management, 92*, 104564. https://doi.org/10.1016/j.tourman.2022.104564

Lin, M., & Ling, Q. (2018). Is role stress always harmful? Differentiating role overload and role ambiguity in the challenge-hindrance stressors framework. *Tourism Management, 68*, 355–366. https://doi.org/10.1016/j.tourman.2018.04.007

Liu, L., Zhang, J., & Wang, Z. (2018). Research on teacher role positioning under the dual education mechanism of studio-school-enterprise cooperation. *Education and Teaching Forum*, (1), 243-244.

Liu, Y., Zhan, Q., & Zhao, W. (2023). A systematic review of VR/AR applications in vocational education: Models, affects, and performances. *Interactive Learning Environments, 1*(18). https://doi.org/10.1080/10494820.2023.2263043

Malik, L., & Siddiqui, S. H. (2022). Role overload and burnout among school teachers: Investigating the moderating role of supervisor support and collegial support. *Pakistan Languages and Humanities Review, 6*(3), 607–614. https://doi.org/10.47205/plhr.2022(6-III)53

Maslach, C., & Jackson, S. E. (1981). The measurement of experienced burnout. *Journal of Organizational Behavior, 2*(2), 99–113. https://doi.org/10.1002/job.4030020205

Maslach, C., Schaufeli, W. B., & Leiter, M. P. (2001). Job burnout. *Annual Review of Psychology, 52*(1), 397–422. https://doi.org/10.1146/annurev.psych.52.1.397

Meng, Q., & Wang, G. (2018). A research on sources of university faculty occupational stress: A Chinese case study. *Psychology Research and Behavior Management, 11*, 597–605. https://doi.org/10.2147/PRBM.S187295

Messmann, G., & Mulder, R. H. (2020). A short measure of innovative work behaviour as a dynamic, context-bound construct. *European Journal of Innovation Management, 23*(5), 1251–1270. https://doi.org/10.1108/EJIM-01-2019-0015

Michalik, N. M., & Schermuly, C. C. (2023). Is technostress stressing coaches out? The relevance of technostress to coaches' emotional exhaustion and coaches' perception of coaching success. *Coaching: An International Journal of Theory, Research and Practice, 16*(2), 155–172. https://doi.org/10.1080/17521882.2022.2128386

Moore, L., Spencer, C., & Gaul, D. (2021). Exploring enablers and barriers to educator engagement in teaching innovation. *Irish Journal of Academic Practice, 9*(2), Article 5. https://doi.org/10.21427/3AZP-9T14

Müller, A. (2024). Cooperation between colleges and companies: Vocational education, skill mismatches and China's turnover problem. *The China Quarterly, 260*, 986–1004. https://doi.org/10.1017/S0305741023001868

Nastjuk, I., Trang, S. T.-N., Grummeck-Braamt, J., Adam, M. T. P., & Tarafdar, M. (2024). Integrating and synthesizing technostress research: A meta-analysis on technostress creators, outcomes, and IS usage contexts. *European Journal of Information Systems, 33*(3), 361–382. https://doi.org/10.1080/0960085X.2022.2154712

Panisoara, I. O., Lazar, I., Panisoara, G., Chirca, R., & Ursu, A. S. (2020). Motivation and continuance intention towards online instruction among teachers during the COVID-19 pandemic: The mediating effect of burnout and technostress. *International Journal of Environmental Research and Public Health, 17*(21), 8002. https://doi.org/10.3390/ijerph17218002

Pansini, M., Buonomo, I., De Vincenzi, C., Ferrara, B., & Benevene, P. (2023). Positioning technostress in the JD-R model perspective: A systematic literature review. *Healthcare, 11*(3), 446. https://doi.org/10.3390/healthcare11030446

Park, S. K., Rhee, M.-K., & Lee, S. W. (2022). The effects of job demands and resources on turnover intention: The mediating roles of emotional exhaustion and depersonalization. *Work, 70*(1), 1–12. https://doi.org/10.3233/WOR-213574

Penado Abilleira, M., Rodicio-García, M.-L., Ríos-de Deus, M. P., & Mosquera-González, M. J. (2021). Technostress in Spanish university teachers during the COVID-19 pandemic. *Frontiers in Psychology, 12*, Article 617650. https://doi.org/10.3389/fpsyg.2021.617650

Peterson et al. (1995). Role conflict, ambiguity, and overload: A 21-nation study. *Academy of Management Journal, 38*(2), 429–452. https://doi.org/10.5465/256687

Podsakoff, P. M., MacKenzie, S. B., Lee, J. Y., and Podsakoff, N. P. (2003). Common method biases in behavioral research: A critical review of the literature and recommended remedies. *Journal of Applied Psychology, 88*(5), 879–903. doi: 10.1037/0021-9010.88.5.879

Pothuganti, S. K. (2024). Technostress: A comprehensive literature review on dimensions, impacts, and management strategies. *Computers in Human Behavior Reports, 16*, 100475. https://doi.org/10.1016/j.chbr.2024.100475

Rafique, M. (2023). Supervisor role overload and emotional exhaustion as antecedents of supervisor incivility: The role of time consciousness. *Journal of Management & Organization, 29*(3), 481–503. https://doi.org/10.1017/jmo.2022.39

Ranathunga, W. D. A. D., & Rathnakara, K. A. K. S. (2022). Impact of techno-stress on job satisfaction of teachers in government schools in Sri Lanka: Evidence from Kurunegala Educational Zone. *Sri Lankan Journal of Human Resource Management, 12*(1). https://doi.org/10.31357/sljhrm.v12.6012

Rohwer, E., Flöther, J.-C., Harth, V., & Mache, S. (2022). Overcoming the "dark side" of technology—A scoping review on preventing and coping with work-related technostress. *International Journal of Environmental Research and Public Health, 19*(6), 3625. https://doi.org/10.3390/ijerph19063625

Roskams, M., McNeely, E., Weziak-Bialowolska, D., & Bialowolski, P. (2021). Job Demands-Resources Model: Its applicability to the workplace environment and human flourishing. In A handbook of theories on designing alignment between people and the office environment (pp. 27-38). Routledge.

Ryan, R. M., & Deci, E. L. (2020). Intrinsic and extrinsic motivation from a self-determination theory perspective: Definitions, theory, practices, and future directions. *Contemporary Educational Psychology, 61*, 101860. https://doi.org/10.1016/j.cedpsych.2020.101860

Samma, M., Zhao, Y., Rasool, S. F., Han, X., & Ali, S. (2020). Exploring the relationship between innovative work behavior, job anxiety, workplace ostracism, and workplace incivility: Empirical evidence from small and medium-sized enterprises (SMEs). *Sustainability, 12*(19), 7953. https://doi.org/10.3390/su12197953

Shan, H. J. (2020). Self-development mental stress adjustment theory and practical research of vocational college teachers under deep

school–enterprise integration: Evidence from Sichuan Tianyi College. *Heilongjiang Science, 11*(23), 27–29.

Sharma, I., Tiwari, V., Gupta, S., & Rana, N. P. (2025). Examining the nexus between technostress and turnover intention: The moderating influence of PsyCap in Indian information management contexts. *Journal of Enterprise Information Management, 38*(2), 450–473. https://doi.org/10.1108/JEIM-08-2023-0434

Siyal, S., Xin, C., Umrani, W. A., Fatima, S., & Pal, D. (2021). How do leaders influence innovation and creativity in employees? The mediating role of intrinsic motivation. *Administration & Society*, 1–25. https://doi.org/10.1177/0095399721997427

Tang, W.-G., & Vandenberghe, C. (2021). Role overload and work performance: The role of psychological strain and leader–member exchange. *Frontiers in Psychology, 12*, 69120 7. https://doi.org/10.3389/fpsyg.2021.691207

Tarafdar, M., Tu, Q., Ragu-Nathan, B. S., & Ragu-Nathan, T. S. (2007). The impact of technostress on role stress and productivity. *Journal of Management Information Systems, 24*(1), 301–328. https://doi.org/10.2753/MIS0742-1222240109

Thangavel, S., Sharmila, K., & Sufina, K. (2025). Revolutionizing education through augmented reality (AR) and virtual reality (VR): Innovations, challenges and future prospects. *Asian Journal of Interdisciplinary Research*. https://doi.org/10.54392/ajir2511

Thomas, K. W. (2009). *Intrinsic motivation at work: What really drives employee engagement*? Berrett-Koehler Publishers.

Tierney, P., Farmer, S. M., & Graen, G. B. (1999). An examination of leadership and employee creativity: The relevance of traits and relationships. *Personnel Psychology, 52*(3), 591-620. https://doi.org/10.1111/j.1744-6570.1999.tb00173.x

Van Essen, H. J., de Leede, J., & Bondarouk, T. (2022). Innovation energy: The stimulus converting employees' innovation properties into innovative work behaviour. *Creativity and Innovation Management, 31*(2), 210-222. https://doi.org/10.1111/caim.12490

Verwaeren, B., & Nijstad, B. A. (2024). Following the rules to drive innovation: A resource conservation and allocation model of work standardization and innovation. *Journal of Business and Psychology, 40(4)*, 977–993. https://doi.org/10.1007/s10869-024-10001-8

Wang, H., Ding, H., & Kong, X. (2022). Understanding technostress and employee well-being in digital work: The roles of work exhaustion and workplace knowledge diversity. *International Journal of Manpower, 44*(2), 334–350.https://doi.org/10.1108/IJM-08-2021-0480

Wang, K., & Shu, Q. (2008). The moderating impact of perceived organizational support on the relationship between technostress and role stress. *Proceedings of the 19th International Conference on Database and Expert Systems Application (DEXA)*, 419-424.

Wang, M. (2024). A multidimensional examination of the role of vocational education teachers from the perspective of new quality productive forces. *Preprints*. https://doi.org/10.20944/preprints202407.2406.v1

Wang, Q., & Yao, N. (2025). Understanding the impact of technology usage at work on academics' psychological well-being: a perspective of technostress. *BMC Psychology, 13*(1), 130. https://doi.org/10.1186/s40359-025-02461-1

World Economic Forum (2025). The future of jobs report 2025 [Online]. Available at: https://www.weforum.org/reports/the-future-of-jobs-report-2025/

Wu, D., Zhou, C., Liang, X., Li, Y., & Chen, M. (2022). Integrating technology into teaching: Factors influencing rural teachers' innovative work behavior. *Education and Information Technologies, 27*(4), 5325–5348. https://doi.org/10.1007/s10639-021-10815-6

Xu, Z., Wang, H., & Suntrayuth, S. (2022). Organizational climate, innovation orientation, and innovative work behavior: The mediating role of psychological safety and intrinsic motivation. *Discrete Dynamics in Nature and Society*, 2022, Article ID 9067136. https://doi.org/10.1155/2022/9067136

Yeap, S. B. (2024). Did ethical leadership help to increase academic staff's innovative work behavior? The mediating role of intrinsic motivation and proactive personality. *Current Psychology, 43*, 9625–9637. https://doi.org/10.1007/s12144-023-04960-z

Zhang, H. (2023). Technostress, academic self-efficacy, and resistance to innovation: Buffering roles of knowledge sharing culture and constructive deviant behavior. *Psychology Research and Behavior Management, 16*, 3867–3881. https://doi.org/10.2147/PRBM.S424396

Zhang, Q., Dai, W., Chen, J., Gu, Y., & Zhao, Y. (2025). The 'side effects' of digitalization: A study on role overload and job burnout of employees. *PLoS One, 20*(4), e0322112

Zhao, N., & Han, S. (2024). Strategies and practices of curriculum reform in vocational education under the background of digital transformation. *The Frontiers of Society, Science and Technology, 6*(9), 41–45. https://doi.org/10.25236/FSST.2024.060907

Zheng, X., Liu, Q., Yang, S., Lu, G., & Wu, L. (2024). Investigating teacher technostress in technology-supported teacher learning with person–environment fit theory. *The Asia-Pacific Education Researcher*. https://doi.org/10.1007/s40299-024-00935-1

Zhu, X. (2023). Research on cultivating innovation and practical skills in higher vocational education. *Frontiers in Educational Research, 6*(26), 29–36. https://doi.org/10.25236/FER.2023.062606

Zia, M. Q., Huning, T. M., Ramish, M. S., Naveed, M., & Ahmed, S. (2024). The impact of psychological empowerment on innovative work behavior: A moderated mediation model of informal learning and proactive behavior. *Review of Managerial Science, 18*, 3695–3716. https://doi.org/10.1007/s11846-023-00717-x

Citation: Zhang, Z., Li, L., and Deeprasert, J. (2026). The impact of technostress and role overload on innovative work behavior among higher vocational teachers: The mediating role of emotional exhaustion and intrinsic motivation. *African Educational Research Journal, 14*(1), 39-54.

VITAE

Name - Surname	Miss Zhidi Zhang
Date of Birth	April 23, 1989
Place of Birth	China
Address	Lishui Dingxiang Garden Community, Daoli District, Harbin, Heilongjiang Province, China
Workplace	Heilongjiang Vocational College of Agricultural Engineering

Education Background

2023-present	Doctor Degree in Philosophy in Management Rajamanagala University of Technology Rattanakosin, Thailand
2011-2012	University of Nottingham, Ningbo, China Financial and Investment (Master's Degree)
2007-2011	University of Nottingham, Ningbo, China Financial Accounting and Management

Work Experience

2014-present	Heilongjiang Vocational College of Agricultural Engineering

Honors and Awards:

2024	First prize, outstanding instructor in national student entrepreneurship competition
2021	College outstanding teacher
2020	Second prize, 7th national campus accounting & finance competition (outstanding instructor)
2015	National third prize, national informatization teaching competition for vocational institutions
2015	First prize, informatization teaching competition for higher vocational colleges in Heilongjiang Province, China

Publication of Journals during Ph.D. Study

Zhang, Z., Li, L. and Deeprasert, J. (2026). The Impact of Technostress and Role Overload on Innovative Work Behavior among Higher Vocational Teachers: The Mediating Role of Emotional Exhaustion and Intrinsic Motivation. *African Educational Research Journal*, 14(1), pp. 39-54. https://doi.org/10.5281/zenodo.18348200.