

EXPLORING THE INFLUENCE OF FAMILY ENVIRONMENTAL FACTORS ON THE EMPLOYABILITY OF HIGHER EDUCATION STUDENTS MAJORING IN ELDERLY CARE MANAGEMENT IN HUBEI PROVINCE, CHINA

Xian Zhao

A Thesis Submitted in Partial Fulfillment of the Requirements
for the Degree of Doctor of Philosophy
Program in Management
Rattanakosin International College of Creative Entrepreneurship
Rajamangala University of Technology Rattanakosin
Academic Year 2026
Copyright of Rajamangala University of Technology Rattanakosin

EXPLORING THE INFLUENCE OF FAMILY ENVIRONMENTAL FACTORS ON THE EMPLOYABILITY OF HIGHER EDUCATION STUDENTS MAJORING IN ELDERLY CARE MANAGEMENT IN HUBEI PROVINCE, CHINA

Xian Zhao

A Thesis Submitted in Partial Fulfillment of the Requirements
for the Degree of Doctor of Philosophy
Program in Management
Rattanakosin International College of Creative Entrepreneurship
Rajamangala University of Technology Rattanakosin
Academic Year 2026
Copyright of Rajamangala University of Technology Rattanakosin

EXPLORING THE INFLUENCE OF FAMILY ENVIRONMENTAL FACTORS ON THE EMPLOYABILITY OF HIGHER EDUCATION STUDENTS MAJORING IN ELDERLY CARE MANAGEMENT IN HUBEI PROVINCE, CHINA

Xian Zhao

2026



Copyright Consent Letter of Thesis/Independent Study between the Student and Rajamangala University of Technology Rattanakosin

At Rajamangala University of Technology Rattanakosin
96 Moo 3, Phutthamonthon Sai 5 Road, Salaya
Subdistrict Phutthamonthon District,
Nakhon Pathom Province 73170

Date 8 April 2026

I, ~~Mr.~~/~~Mrs.~~/Miss Xian Zhao Student ID 1662110381102, am a student of the Faculty/College of Rattanakosin International College of Creative Entrepreneurship in the Program of Doctor of Philosophy Major: Management Plan Thesis

agree to grant the copyright and other related information in the approved thesis/ independent study under the following topic

Title of Thesis/Independent Study

Thai .....

English Exploring the Influence of Family Environmental Factors on the Employability of Higher Education Students Majoring in Elderly Care Management in Hubei Province, China

I agree to grant such rights to Rajamangala University of Technology Rattanakosin for the full term of protection as provided under relevant intellectual property laws.

Signature ..... Student
(Miss Xian Zhao)

Signature ..... Advisor
(Assistant Professor Dr. Jirawan Deeprasert)

Signature ..... Director
(Dr. Nuttapong Jotikasthira)



Thesis Certificate
Rattanakosin International College of Creative Entrepreneurship
Rajamangala University of Technology Rattanakosin

Thesis of Title	Exploring the Influence of Family Environmental Factors on the Employability of Higher Education Students Majoring in Elderly Care Management in Hubei Province, China
Researcher	Miss Xian Zhao
Degree Sought	Doctor of Philosophy Program in Management (International Program)
Thesis Advisor	Assistant Professor Jirawan Deeprasert, Ed.D.

Rattanakosin International College of Creative Entrepreneurship, Rajamangala University of Technology Rattanakosin Approved this Thesis in Partial fulfillment of the Requirements for the Degree of Doctor of Philosophy

..... Director
(Dr. Nuttapong Jotikasthira)

Thesis Committee

..... Chairperson
(Professor Dr. Kornchai Phornlaphatrachakorn)

..... Member
(Assistant Professor Dr. Uraphen Yimprasert)

..... Member
(Dr. Karnjira Limsiritong)

..... Member
(Dr. Tongfeng Xu)

..... Member and Advisor
(Assistant Professor Dr. Jirawan Deeprasert)

Title of Thesis Exploring the Influence of Family Environmental Factors on the Employability of Higher Education Students Majoring in Elderly Care Management in Hubei Province, China

Researcher: Miss Xian Zhao, (M.B.A.); **Degree:** Doctor of Philosophy (Management);
Advisor: Jirawan Deeprasert, (Ed.D.), Assistant Professor; **Academic Year:** 2026

ABSTRACT

The objectives of this study were (1) to investigate the relationships between family expectations, financial support, informational support, values and beliefs, occupational identity, and employability, and (2) to identify the key family environmental factors affecting employability.

This study adopted a transformative mixed-method research design. Quantitative data were collected through a structured questionnaire survey administered to 571 students and analyzed using licensed versions of SPSS (Version 26.0) and AMOS (Version 26.0). Qualitative data were gathered via semi-structured interviews with 10 employers, 10 educators, and 10 students along with their family members. These data were analyzed using NVivo software to identify key themes and patterns.

Major findings: (1) On the issue of those relationships, financial support had the strongest impact on employability, followed by values and beliefs, informational support, and family expectations; and (2) On the issue of key family environmental factors, occupational identity played an indirect role in these relationships. The findings offered both theoretical contributions and practical implications for enhancing the employability of graduates in the elderly care sector.

Keywords: Employability, Elderly care, Higher education, Career development, Family environment

Advisor's Signature .....

Acknowledgments

As this dissertation draws to a close, I would like to express my deepest gratitude to those who have supported me throughout this demanding yet rewarding academic journey.

First and foremost, I am profoundly indebted to my supervisor, assistant professor Dr. Jirawan Deeprasert of Rattanakosin International College of Creative Entrepreneurship, Rajamangala University of Technology Rattanakosin, for her unwavering guidance, insightful critiques, and constant encouragement. Her intellectual rigor and mentorship have been indispensable to the completion of this research. I am equally grateful to my co-supervisor, Dr. Tongfeng Xu, whose expert advice and constructive feedback significantly enhanced the quality of this work.

My sincere appreciation extends to the faculty members and research colleagues at the College for their valuable discussions and collaborative spirit. Sincere thanks to Prof. Dr. Poomthan Rangkakulnuwat, Dr. Nuttapong Jotikasthira, Director of the College, Assistant Prof. Dr. Jirawan Deeprasert, Program Chair of Ph.D. in Management, Miss. Valee Amatyakul, Miss. Chen Yulin, and all the Rajamangala University of Technology Rattanakosin faculty, their hard work and dedication have provided me with a favorable learning environment.

To my family, I owe immeasurable thanks for their unconditional support and patience during this prolonged endeavor. Their unwavering encouragement and willingness to shoulder additional responsibilities during my periods of intense academic focus were instrumental in creating the necessary conditions for this research to flourish.

This doctoral odyssey has been as intellectually transformative as it has been personally humbling. I remain profoundly indebted to each individual—colleagues, and loved ones alike—whose unique contributions, whether through scholarly mentorship, steadfast encouragement, or stimulating discourse, collectively shaped this academic endeavor's successful fruition.

Xian Zhao

February 2026

Table of Contents

	Page
Abstract	(1)
Acknowledgments	(2)
Table of Contents	(3)
List of Tables	(7)
List of Figures	(9)
List of Abbreviation and Glossary	(10)
Chapter 1 Introduction.....	1
1.1 Research Background	1
1.2 Significance of The Study	11
1.2.1 Theoretical Significance	11
1.2.2 Practical Significance	12
1.3 Research Questions	13
1.4 Research Objectives	13
1.5 Methodology	13
1.6 Definitions of Terms	14
1.6.1 Family Expectations	14
1.6.2 Financial Support	15
1.6.3 Informational Support	16
1.6.4 Values and Beliefs	16
1.6.5 Occupational Identity	17
1.6.6 Employability	18
1.7 Delimitation of the Thesis	18
1.8 Outline of the Thesis	19
1.9 Conclusion	19
Chapter 2 Literature Review	21
2.1 Contexts of the Study	21
2.1.1 Elderly Care Industry of China and the Higher Education Students Majoring in Elderly Care Management	21
2.1.2 Employability of the Higher Education Students Majoring in Elderly Care Management	30
2.1.3 The Higher Education Students Majoring in Elderly Care Management in Hubei Province	38

Table of Contents (continued)

	Page
2.2 Parent Disciplines	44
2.2.1 Ecological Systems Theory	44
2.2.2 Identity Control Theory	47
2.3 Immediate Disciplines	50
2.3.1 Family Expectations of Higher Education Students Majoring in Elderly Care Management	51
2.3.2 Financial Support of Higher Education Students Majoring in Elderly Care Management	51
2.3.3 Information Support of Higher Education Students Majoring in Elderly Care Management	52
2.3.4 Values and Beliefs of Higher Education Students Majoring in Elderly Care Management	53
2.3.5 Occupational Identity of Higher Education Students Majoring in Elderly Care Management	54
2.4 Research Hypotheses and Empirical Model	55
2.4.1 Research Hypotheses	55
2.4.2 Empirical Model	67
2.5 Conclusion	68
Chapter 3 Methodology	70
3.1 Overview and Justification of Research Paradigm	70
3.1.1 Pragmatism	70
3.1.2 Positivism	71
3.1.3 Constructivism	72
3.1.4 The Paradigm for this Study	72
3.2 Quantitative Research	74
3.2.1 Research Tool	75
3.2.2 Data Collection Administration	81
3.2.3 Data Analysis	85
3.3 Qualitative Research	90
3.3.1 Research Tools	91
3.3.2 Data Collection Administration	97
3.3.3 Data Analysis	102
3.4 Ethical Considerations	103

Table of Contents (continued)

	Page
3.5 Conclusion	104
Chapter 4 Results	106
4.1 Findings of the Quantitative Research	106
4.1.1 Descriptive Statistical Analysis	106
4.1.2 Variable Description Statistical Analysis	107
4.1.3 Reliability and Validity Analysis	108
4.1.4 Confirmatory Factor Analysis	109
4.1.5 Pearson Correlation and Discriminant Validity Analysis	121
4.1.6 Common Methodology Bias	122
4.1.7 Hypotheses Test	122
4.2 Findings of the Qualitative Research	128
4.2.1 Descriptive Statistics of Respondents	128
4.2.2 Open Coding Analysis	130
4.2.3 Axial Coding Analysis	135
4.2.4 Selective Coding Analysis	139
4.2.5 Relationship between Family Environmental Factors and Employability	140
4.3 Conclusion	143
Chapter 5 Discussion and Conclusion	144
5.1 Discussions	145
5.1.1 Discussion of Research Question One	145
5.1.2 Discussion of Research Question Two	149
5.2 Implication to Theories	153
5.2.1 Implications to Ecological Systems Theory	153
5.2.2 Implications to Identity Control Theory	154
5.3 Implication to Practitioners	156
5.4 Limitation of the Study and Implications of Future Research	158
5.4.1 Limitation of the Present Study	158
5.4.2 Implications for Future Research	159
5.5 Conclusion	159
Bibliography	161

Table of Contents (continued)

	Page
Appendix ……	197
Appendix A Questionnaire (English Version) ……	198
Appendix B Questionnaire (Chinese Version) ……	203
Appendix C Research Ethics Certificate ……	208
Appendix D Publication of Journal during Ph.D. Study …….	211
Vitae ……..	223

List of Tables

Table		Page
2.1	Countries and areas with the largest shares of people aged 65 years or over, 1980, 2021 and 2050	24
2.2	Status of Elder Care Management in Higher Education in Different Countries	28
2.3	Factors Affecting Employability of Students	31
2.4	Research Findings Related to Family Environment	35
2.5	Population Statistics of Central China Provinces at the end of 2022	39
2.6	List of the 15 Universities in Hubei Offering Elderly Care Management Major	41
2.7	List of Rated Elderly Care Institutions in Hubei Province for 2023 (five-star and four-star)	42
2.8	Summary of Hypotheses Proposed by This Study	66
3.1	Operational Definition of Variables	75
3.2	Variable Measurement Scales	76
3.3	Number of Graduates Majoring in Elderly Care Management Who Graduated in the 2023-2024 Year in Hubei	82
3.4	Questionnaire Allocation Table	84
3.5	Reliability Analysis of Pilot Test	85
3.6	Exploratory Factor Analysis of Pilot Test	86
3.7	Respondents' Interview Questions	93
3.8	Elderly Care Institutions and High Education Institutions to be Interviewed	98
4.1	Descriptive Statistics of Respondents (N=571)	107
4.2	Variable Description Statistical Analysis	108
4.3	Reliability Analysis of Each Variables	108
4.4	KMO and Bartlett's Test of This Study	109
4.5	Model Fit Index of Family Expectations	110
4.6	Convergent Validity and Composite Reliability Analysis of Family Expectations	111
4.7	Model Fit Index of Financial Support	112
4.8	Convergent Validity and Composite Reliability Analysis of Financial Support	113
4.9	Model Fit Index of Informational Support	114

List of Tables (continued)

Table		**Page**
4.10	Convergent Validity and Composite Reliability Analysis of Informational Support	115
4.11	Model Fit Index of Values & Beliefs	116
4.12	Convergent Validity and Composite Reliability Analysis of Values & Beliefs	116
4.13	Model Fit Index of Occupational Identity	118
4.14	Convergent Validity and Composite Reliability Analysis of Occupational Identity	118
4.15	Model Fit Index of Employability	120
4.16	Convergent Validity and Composite Reliability Analysis of Employability	120
4.17	Pearson Correlation and Discriminant Validity Analysis	121
4.18	Total Variance Explained	122
4.19	The Fitting Indicators of the Structural Equation Model	123
4.20	Results of Structural Model Testing	124
4.21	Bootstrap Analysis of Mediating Effect Significance Test	125
4.22	Summary of Testing Hypotheses by This Study	126
4.23	Code for Employers, Teachers, Students and Corresponding Family Members	128
4.24	Open Coding Process	130
4.25	Axial Coding	136
4.26	Results of Selective Coding Process	139

List of Figures

Figures	Page
1.1 The Current State of Research on "Family expectations" and "Employability" from Web of Science	9
1.2 The Current State of Research on "Values and Beliefs" and "Employability" from Web of Science	9
2.1 Number of people aged 65 years or above (in millions), World and Regions, 1980, 2021, and 2050	22
2.2 Population prospects by age group, China (2035)	24
2.3 Location of Hubei Province in China	38
2.4 Ecological Systems Theory Model of Human Development	46
2.5 Empirical Model Based on the Ecological Systems Theory	47
2.6 Basic Identity Theory Model	48
2.7 Empirical model based on identity control theory	50
2.8 Empirical Model	68
3.1 The Process of X to Y	89
3.2 The Process of X through M ultimately to Y	89
4.1 Confirmatory Factor Analysis Model of Family Expectations	109
4.2 Confirmatory Factor Analysis Model of Financial Support	111
4.3 Confirmatory Factor Analysis Model of Informational Support	113
4.4 Confirmatory Factor Analysis Model of Values & Beliefs	115
4.5 Confirmatory Factor Analysis Model of Occupational Identity	117
4.6 Confirmatory Factor Analysis Model of Employability	119
4.7 Path Analysis for the Model	126

List of Abbreviation and Glossary

Abbreviation / Glossary	Explanation
FE	Family expectations
FS	Financial support
IS	Informational supportl
VB	Values & beliefs
OI	Occupational identity
EMP	Employability

CHAPTER 1
INTRODUCTION

This chapter begins by exploring the challenges for China in the context of global ageing, and then exploring the strategies for enhancing the employability of students majoring in elderly care management in China. It highlights the unique influence of family environmental factors, such as family expectations, financial support, informational support, values and beliefs in shaping the students' employability. Specifically, it identifies the research gaps in this field of study, including the lack of empirical studies on the specific impact of family expectations, values and beliefs on employability. Subsequently, this chapter provides the theoretical and practical significance of the study, the research questions to be addressed, and identifies the research objectives.

1.1 Research Background

The global ageing trend is becoming increasingly evident. According to the latest data, the global population aged 65 and over has reached approximately 800 million, accounting for 10.2% of the world's total population. This number is expected to double to 1.58 billion by 2050, making up more than 16% of the global population (United Nations, 2024). In China, the ageing phenomenon is even more pronounced. The seventh national census data in 2020 showed that China's population aged 60 and above reached 264 million. It is projected that the number of elderly people aged 60 and above in China will exceed 300 million during the 14th Five-Year Plan period. This demographic shift signifies that China will transition from a mildly aging society (where the elderly constitute between 7% and 14% of the total population) to a moderately aging society (where the elderly population reaches 14% to 20%) (Jun, 2022). By 2050, China is expected to become the country with the largest population of people aged 65 and above in the world.

Population ageing has profound impact on society and the economy. Due to economic pressures and lifestyle shifts, large-scale migration from rural to urban areas in search of better education and job opportunities further significantly impacts the older population (Li et al., 2021). First, it will rely more on institutional care (McGarry &

Grabowski, 2021). As the result of large-scale migration of people from rural to urban areas, old population will live by themselves alone then family-based care diminishes, there is an increased reliance on formal care systems, such as nursing homes and long-term care facilities (Li et al., 2022). However, these institutions are often underfunded and understaffed, particularly in less developed regions (Hsieh et al., 2021). The quality of care in these facilities is low, leading to poor outcomes for the older, including neglect, poor health management, and a lack of personalized attention (Bladt et al., 2023). Second, it will increase isolation and mental health concerns (Mushtaq & Khan, 2024). As the older live alone for a long time and lack the companionship of family members, they feel lonely frequently. This bad feeling can lead to depression, which is linked to both physical and mental health deterioration (Li et al., 2020).

Employability refers to an individual's ability to secure and maintain employment within the labor market (Donald & Miller, 2023). This concept extends beyond academic knowledge and technical skills, encompassing soft skills such as communication, teamwork, problem-solving abilities, and adaptability to change (Harten et al., 2022). The role of employability is to enable individuals to better integrate into the work environment, enhance job performance, and support career development (Ho et al., 2023). It is a critical factor for career success and stability(Zhang et al., 2023). Currently, the majority of elderly care workers are middle-aged women aged between 45 and 55. Their education level is generally low, with most having only a high school education. The main work content includes providing basic life care services, such as daily cleaning, meal preparation, and assistance with mobility (Wang & Su, 2023). However, as society evolves and living standards improve, the employment requirements for elderly care are undergoing significant changes (Isa et al., 2023): 1) There has been a noticeable enhancement in the overall health consciousness of the older population. There has been a noticeable enhancement in the overall health consciousness of the older population. The older population is increasingly aware that mental health is just as crucial as physical health (Rajovic et al., 2024). Particularly in later life, psychological issues can trigger a chain reaction that affects physical health, further diminishing the quality of life for the older population (Amaral & Loureiro, 2021). 2) The demands for elderly care are now more comprehensive and complex, encompassing not only physical care and mental health, but also cognitive training and social support (Reynolds et al., 2022). Older individuals seek

not only appropriate care but also a sustained quality of life, enabling them to continue enjoying social activities (Owen et al., 2022). Elderly care has shifted from being solely about health maintenance to a more multifaceted approach, including recreational activities and cognitive rehabilitation training (Hu et al., 2022). In the field of elderly care industry, employability is particularly crucial as the industry has evolved from providing basic daily care to offering more comprehensive and specialized services (Zou et al., 2024). Professionals in elderly care must continually enhance their employability by improving communication skills, acquiring advanced professional knowledge, developing psychological care competencies, emergency response capabilities, and cultural sensitivity (Argyriadis et al., 2022). These skills are essential to meet the increasingly diverse needs of elderly care (Xie et al., 2020).

As the ageing trend increasing pressures on healthcare systems, changes in family structures, shrinks quality of the labour force in China, slows Chinese economic growth and reduces investment demand (Liu et al., 2023). Chinese government has introduced a series of measures to promote the development of the elderly care industry (Xie et al., 2020), particularly focusing on increasing efforts to expand employment opportunities for students and strengthening the construction of elderly care institutions, which highlights the state's strong emphasis on this sector (Chen et al., 2023). For instance, the Ministry of Education of the People’s Republic of China, issued a policy document in 2019 encouraging universities and vocational institutions to establish academic programs related to elderly care, including geriatric nursing, rehabilitation, and social work, in order to support the development of the elderly care services sector (Ministry of Education of the People’s Republic of China, 2019). Additionally, the government has set up special funds to support the employment of graduates from elderly care programs and encourages more young people to join the elderly care industry through employment subsidies and professional training (Mu et al., 2022). In terms of elderly care facility construction, the government has also ramped up policy support. For instance, the "14th Five-Year Plan for the Development of National ageing Services and Elderly Care System" explicitly aims to provide 55 elderly care beds per 1,000 senior citizens by 2025 (State Council of the People's Republic of China, 2021).

Despite various efforts, the social and economic pressures brought about by China’s aging population have not been effectively alleviated (Chen, 2023), as the

imbalance between the supply and demand for talent in the elderly care industry remains significant (Zhang et al., 2023). Concurrently, the demand for elderly care management staffs will be 5.6 million according to the low standard and 11.5 million according to the high standard. Thus, human resource supply of long-term care is worrying." (Burchardt et al., 2021). Additionally, the industry struggles with high attrition rates, with up to 30% of caregivers leaving the sector shortly after employment (Yi et al., 2022). Despite the increasing need for services, caregivers' salaries remain low, averaging around 4,000 RMB per month in 2022-far below those of similar positions in other industries-which reduces the sector's attractiveness to potential talent (Bao et al., 2024). These challenges contribute to the persistent supply-demand gap in elderly care services, undermining the industry's ability to meet the needs of an aging population (Bao et al., 2024). This is mainly due to the weak employability of students majoring in elderly care management and their inability to adapt to the diversified development of the needs of the elderly care industry (Yang, 2020). The elderly care industry nowadays not only provides higher-quality medical care, nursing, and living services to the older population, significantly improving their quality of life (Ghenta et al., 2022), but it also promotes economic growth, creates employment opportunities, balances the labor market, and drives the optimization and upgrading the industrial structure. While directly addressing ageing, this industry also injects new vitality and opportunities into China's social and economic development (Liu & Dai, 2022). Thus, the development of industries related to elderly care, especially the elderly care service industry, has become a key strategy in China's response to the challenges of ageing tendency (Hung, 2022). Graduates of elderly care management must possess high employability to effectively adapt to the diverse demands of the job market and maintain their competitive edge in a rapidly changing environment (Hassock & Hill, 2022). Furthermore, enhancing the employability of these graduates is fundamental to addressing the supply-demand imbalance in the elderly care industry and promoting the sustainable development of the sector (Zhang, 2024).

Currently, the demand for professional majoring in the elderly care services industry far exceeds the available supply of human resources. Most elderly care institutions struggle to generate sufficient revenue, and employment growth in the sector has lagged behind other industries, which limits the availability of high-quality services (Dong et al., 2022). Also, according to the 2017 China civil affairs statistics yearbook, by

the end of 2016, there was less than 20 thousand certified nursing staffs in China, which indicated that there would be a massive gap in China's elderly care related staffs in the future, and the supply of human resources for elderly care would be worrying (Zhang et al., 2021). The reason for the imbalance between supply and demand for talent in the elderly care industry lies in the graduates lacking of sufficient employability, which hampers their ability to meet the increasingly diverse needs of elderly care (Bao et al., 2024). As the elderly population's requirements evolve beyond basic physical care to encompass mental health, cognitive support, and social interaction, graduates who lack the necessary skills and adaptability find it difficult to secure employment in this competitive field (Wang, 2023). This gap between the skills acquired during their education and the real-world demands of elderly care services exacerbates the employment challenges these graduates face (Li et al., 2020). Therefore, enhancing the employability of higher education students majoring in elderly care management is considered to be a crucial measure to address the imbalance between the supply and demand for talent in the elderly care industry (Liang et al., 2023).

According to ecological systems theory, which was developed by psychologist Urie Bronfenbrenner, human development is influenced by different types of environmental systems (Chen & Yu, 2023). Ecological systems theory has emphasized the role of the family environment as a key factor in the development of an individual's social behavior (Dunst & Carl, 2022). Especially in the context of accelerated global aging, the direct influence of family environment on individual behavior has become increasingly evident (Li et al., 2021). During the career development period of higher education students majoring in elderly care management, family environmental factors, with their enduring and frequent influence, become a core element in shaping employability (Dumedah et al., 2023). Therefore, family environmental factors play an indispensable role in a student's career development, directly or indirectly influencing their employability (Koçak et al., 2021).

A previous study suggest that the family environment on individuals consists of four key variables: family expectations, financial support, informational support, values and beliefs (Tasković & Pedović, 2024). Firstly, family expectations refer to the academic and career aspirations or demands that families have for students (Chen et al., 2024). These expectations often translate into pressure on students, which can have a dual effect: on one

hand, it can motivate students to work harder; on the other hand, it can trigger anxiety and a fear of failure, which can subsequently impact their sense of identification with their future profession (Chen et al., 2023). In the case of students pursuing a majoring in smart elderly care, parents may harbor biases against the industry due to its relatively low social status and pay levels (Zhou et al., 2022). This negative perception from parents may further contribute to the internal conflict that students experience when considering a career in this field. Such biased career expectations can lead to hesitation and confusion in students' career planning, leaving them uncertain about whether their choices align with family expectations and societal approval (Jamil, 2024). When students internalize these biased career expectations, they may feel that their vocational choices lack family support, which directly diminishes their employability in the elderly care industry (Zhou et al., 2022). Conversely, when families support their children's decision to enter the elderly care industry and maintain a positive outlook on their career prospects, students tend to exhibit strong employability (Wang et al., 2024). Previous research has highlighted that when family expectations align with the societal values of the elderly care industry, students are more inclined to pursue careers in the field and feel a greater sense of social significance and personal fulfillment in their work (Cech, 2021).

Secondly, financial support refers to the economic assistance families providing to help students complete their academic and career development tasks (Roksa & Kinsley, 2019). For students enrolled in elderly care industry, a lack of sufficient financial support from their families may force them to rely on scholarships, student loans, or part-time jobs to sustain their studies (Lemon, 2023). Simultaneously, the public perception of low wages and unstable employment in the elderly care industry may cause students to doubt their future financial stability and career prospects, particularly regarding their ability to repay debts incurred during their studies (Huang et al., 2023). Under such pressure, some students may reconsider their career choices, with some even abandoning plans to continue working or furthering their education in the elderly care sector, opting instead for fields perceived to offer higher income and greater job security (Wanberg et al., 2020). This career shift due to financial concerns not only affects student's employability in the elderly care industry but could also hinder the industry's talent cultivation and overall growth. Conversely, when families provide adequate financial support, students can focus more on their studies and career development, maintaining their confidence in the elderly care

industry (Chen et al., 2020). This support enables students to fully seize educational opportunities, accumulating crucial knowledge and experience that can invigorate the elderly care industry with fresh expertise, thereby reinforcing their employability (Koçak et al., 2021).

Thirdly, informational support refers to the assistance provided by family members through sharing knowledge, offering guidance, and relaying information to help individuals make academic and career decisions (Vautero & Silva, 2022). For students enrolled in elderly care programs, informational support plays a crucial role in shaping their employability (Lun, 2022). By providing insights into career development, family members can help students gain a deeper understanding of the current state of the elderly care industry, its future prospects, and the specific challenges they may face (Koçak et al., 2021). This informational support not only boosts students' confidence in the elderly care sector but also helps them make more rational and personalized decisions about their career paths (Huang et al., 2023). In a field like elderly care, where opinions about the industry are often mixed, the informational support and guidance from family can further solidify students' determination to enter the field (Yao et al., 2021). Moreover, family members' advice on career planning and sharing of professional experiences can significantly enhance student's employability in the elderly care industry (Fitzpatrick et al., 2023). When families provide knowledge about the industry and information on job opportunities, students are better able to understand the social contributions of their chosen profession and are more motivated to invest in their career development, which in turn strengthens their employability (Adela et al., 2021).

Lastly, values and beliefs refer to the cultural and belief systems passed down through generations within families, which profoundly influence family members' career expectations and life choices (Tuma et al., 2025). These values and beliefs are often conveyed to the next generation through the behavior and attitudes of family members, shaping student's and employability (Liang et al., 2023). For example, if a family's values prioritize high social status or greater financial returns, students may develop weak employability in fields like elderly care, which are widely praised for their social contributions but offer relatively limited economic rewards (Kim & Joyce, 2024). On the other hand, students raised in families that emphasize a spirit of service and social responsibility tend to exhibit stronger employability when entering the elderly care

industry (Fu & Xu, 2022). This is because such families encourage their children to pursue careers that have a positive impact on society and recognize the intrinsic value of these professions. Therefore, students who grow up in families with rich cultural backgrounds often show better employability when choosing the elderly care industry as their career path (Jin et al., 2024).

When exploring the impact of family environment on the employability of higher education students majoring in elderly care management, Kang and Jing (2022) identified occupational identity as a key psychological process that mediates this relationship. Occupational identity refers to an individual's recognition and acknowledgment of the value, significance, and social contribution of their profession. This sense of identity is a critical factor in maintaining job stability and boosting work motivation (Li et al., 2021). Similarly, Koçak et al. (2021) revealed that the family environment shapes students' occupational identity, which subsequently has an indirect effect on their employability.

In order to deeply investigate the influencing factors of the employability of higher education students majoring in elderly care management in family environment, this study comprehensively discussed several influencing factors, including family expectations, financial support, informational support,, values and beliefs and occupational identity. Although there is much empirical support for the effects of financial support, informational support, and occupational identity on employability, the relationships between family expectations and employability, values and beliefs and employability still need further research.

For purpose of revealing these research gaps, the researcher searched the keywords of "family expectations" and "employability", respectively in the core collections of three mainstream academic databases, Web of Science, Google Scholar and CNKI in the past five years. A total of 209 pieces of literature related to "family expectations" and "employability" were identified. These works were analyzed using CiteSpace software, revealing that most studies focus on the definition, current status, and future development directions. However, as shown in Figure 1.1, few articles address students' family environments, highlighting a research gap.

To deeply investigate the factors influencing the employability of higher education students majoring in elderly care management within the context of family environments, the researcher also searched the "values and beliefs" and "employability", respectively in

the core collections of three mainstream academic databases, Web of Science, Google Scholar and CNKI in the past five years. There are 211 relevant articles with "values and beliefs" and "employability" were retrieved. After analyzing the literature through Cite-space software, it was found that the keyword "employability" is related to perception and exploration , as shown in Figure 1.2, but no keywords related to "values and beliefs" were found, so there is a research gap in the empirical study of values and beliefs and students' employability.

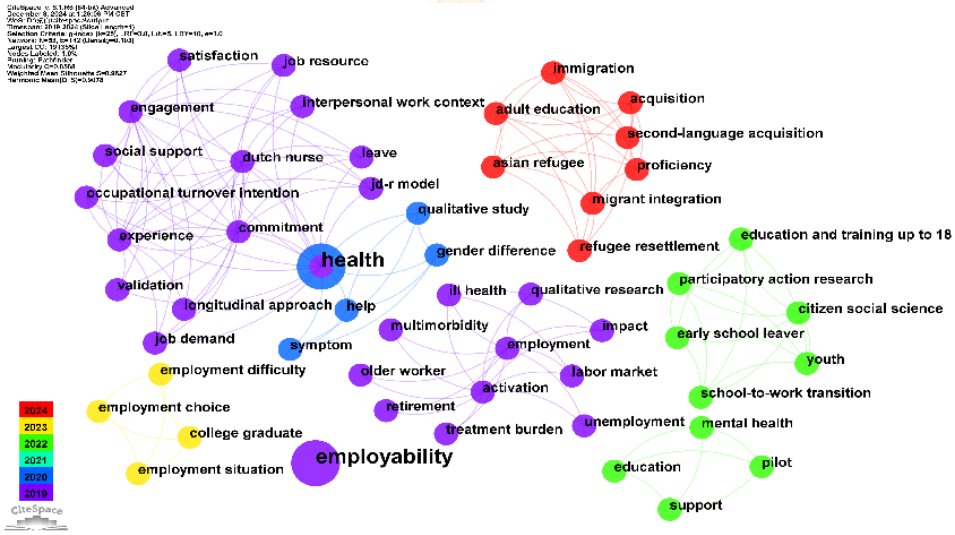

Figure 1.1 The Current State of Research on "Family expectations" and "Employability" from Web of Science

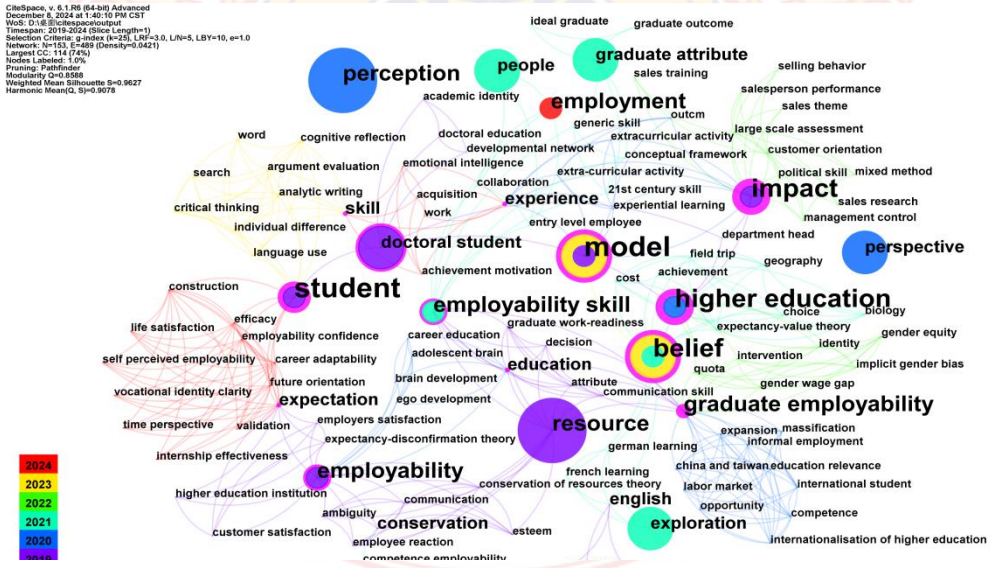

Figure 1.2 The Current State of Research on "Values and Beliefs" and "Employability" from Web of Science

After careful sorting and reading, 49 literatures closely related to the subject of this study were finally identified. Among the 49 literatures, 42 focused on the future development prospects of the elderly care industry, humanistic care, social support and work significance. Only 7 articles are related to family factors, among which the most relevant literature for this study is *socioeconomic diversity in the hospitality industry: the relationship between social class background, family expectations, and career outcomes* (Lee & Yu, 2023). Their research suggests that the influence of social class background on career choice is mediated by family expectations, especially the expectation of families with high social class background is more inclined to maintain social status and economic stability. Although their study provides support for this study's confirmation that family expectations as a key variable in family factors has a positive impact on career choice, the study does not delve into the direct link between family expectations and employability, nor has there been a direct link between values and beliefs and employability. Therefore, the researcher found that the relationship between "family expectations" and "employability," "values and beliefs" and "employability" has not been empiricately studied, so there are two research gaps, which also leads to the incomplete research on the influencing factors of employability of the higher education students majoring in elderly care management.

In addition, the influence of family environment on employability is multidimensional and far-reaching, because family plays multiple roles in the career development process of an individual, it is an indispensable factor in the formation of an individual's employability, and should be fully paid attention to career development studies (Yuhuan et al., 2022). However, few studies have investigated the specific impact of family environment on employability for the higher education students majoring in elderly care management. Faced with the low employability of the higher education students majoring in elderly care management, it is necessary to dig deeper into the specific factors related to family environment. To this end, the researcher plan to conduct an in-depth analysis using qualitative research methods to better identify these factors. Because qualitative research methods are applicable to in-depth understanding of people's experiences and opinions on specific topics (Grass, 2024), they help to reveal which factors in family environment have a positive relationship with employability.

In conclusion, when analyzing the influencing factors of employability of the higher education students majoring in elderly care management, this study identified the gaps in the empirical studies on "family expectations" and "employability", "values and beliefs" and "employability". This dearth of research in the field is detrimental to the high-quality development of higher education and employability development of students. The purpose of this study is to demonstrate this gap through quantitative research, and to investigate how the four factors of family expectations, financial support, informational support,, values and beliefs affect the employability of the higher education students majoring in elderly care management through the intermediary variable of occupational identity. At the same time, this study will also adopt qualitative research methods to investigate the in-depth insights of family environment on the factors affecting the employability of the higher education students majoring in elderly care management.

1.2 Significance of The Study

1.2.1 Theoretical Significance

Firstly, this study aims to enrich the theoretical framework of elderly care management in the context of an ageing society in China. By examining the influence of family environment on the employability of these students, this study investigates the relationship between family environmental factors and career development. This study contributes to the advancement of management theory in elderly care management by offering insights into how family environment and educational resources can enhance students' career competencies. Specifically, it investigates how factors such as family expectations, financial support, informational support, values, and beliefs shape students' occupational identity in this field, ultimately influencing their employability.

Secondly, this study can deepen the cross-disciplinary research between family environment and career development. By exploring its impact on the employability of students majoring in elderly care management, this study provides a fresh perspective on the connection between family environment and career development. Although the influence of family environment has been widely studied in psychology, sociology, few studies have specifically examined its effects on career development in specialized fields. This study bridges the gap by linking family environment with professional education in elderly care management. It enhances our understanding of how family resources

contribute to the development of professional skills and career readiness, thereby addressing a significant gap in existing research.

Finally, this study seeks to promote a multidimensional model of employability development. Existing models of employability often emphasize the role of educational institutions, focusing on aspects such as curriculum design, internship programs, and faculty guidance. However, the influence of the family environment-an essential site of socialization-on students' career preparation and employability has been largely overlooked. By integrating the family environment into existing employability development models, this study proposes a holistic framework that bridges education, family, and societal factors, offering deeper insights into how complex family contexts shape the employability of higher education students specializing in elderly care management.

1.2.2 Practical Significance

Firstly, this study can help optimize educational practices within elderly care management programs. By illuminating how family environments influence the employability of students majoring in elderly care management, higher education institutions can better tailor their curricula and teaching methods. For students from less advantaged family backgrounds, for example, universities might offer additional career counseling, hands-on training, and psychological support to counterbalance any negative effects on employability. Such targeted adjustments not only enhance these students' competitiveness in the job market but also elevate the overall quality of elderly care management education, ultimately preparing professionals who more effectively meet societal needs.

Secondly, this study provides valuable insights for improving family support in students' career development. By examining how various dimensions of the family environment-such as expectations, financial and informational support, as well as values and beliefs-shape employability, this study offers practical guidance for parents. Armed with this knowledge, families can foster more career-friendly home environments and actively engage in their children's career planning. As a result, students benefit from a stronger support system that better aligns with their professional aspirations.

Finally, the findings of this study can inform policymakers seeking to promote educational equity. Understanding the influence of family environments on students'

career prospects enables government and educational authorities to implement targeted policies-such as financial aid, parental education programs, and career services-that ensure equal opportunities for students from all backgrounds. These insights can also guide local governments in formulating region-specific educational strategies, ensuring a fair distribution of resources and improved employment outcomes for those pursuing careers in elderly care management. In turn, such policy interventions align educational development more closely with the demands of a globally aging population.

1.3 Research Questions

RQ1: How do family expectations, financial support, informational support, values and beliefs, and occupational identity relate to the employability of the higher education students majoring in elderly care management?

RQ2: How are the main family environmental factors influencing employability of the higher education students majoring in elderly care management?

1.4 Research Objectives

RO1: To verify the relationships between family expectations, financial support, informational support, values and beliefs, and occupational identity with the employability of the higher education students majoring in elderly care management.

RO2: To identify the main family environmental factors influencing employability of the higher education students majoring in elderly care management.

1.5 Methodology

This study utilized a mixed-method approach combining questionnaires (quantitative analysis) and semi-structured interviews (qualitative analysis) guided by a pragmatic methodology.

In the quantitative phase of the study, a questionnaire was used to collect data from 600 students majoring in elderly care management to verify the relationships between family expectations, financial support, informational support, values and beliefs, and occupational identity with the employability of the higher education students majoring in elderly care management. This approach facilitated the construction of an empirical model of the employability of elderly care management students, while also identifying research gaps between the independent variables (family expectations, values and beliefs) and the

dependent variable (employability). This provides a theoretical basis and research direction for subsequent qualitative studies.

During the qualitative research phase, the researcher conducted semi-structured interviews with 30 respondents, gathering their experiences, views, and insights to investigate and gain a deeper understanding of the family environmental factors influencing the employability of higher education students majoring in elderly care management. This approach allows the researcher to examine a diverse range of perspectives and deepen the understanding of the research question, while identifying key family environmental factors affecting the employability of elderly care management students. The qualitative study provides the researcher with a more comprehensive understanding of these factors and enables the development of more precise conclusions, which can support the formulation of targeted recommendations for improving the education of elderly care management majors and fostering the development of the related job market.

By combining quantitative and qualitative research methods, this study offers deeper insights into the relationships between family expectations, financial support, informational support, values and beliefs, occupational identity, and the employability of higher education students majoring in elderly care management. Ultimately, based on the findings from both research approaches, this study seeks to help students better meet the demands of the elderly care job market and achieve stronger career outcomes, while also providing more targeted support and guidance to help them navigate their professional paths effectively.

1.6 Definitions of Terms

This section summarizes the terms mentioned by previous scholars in relevant academic works. Key terms in this study include family expectations, financial support, informational support, values and beliefs, and occupational identity, and employability.

1.6.1 Family Expectations

Family expectations refer to the aspirations and demands that families place on individuals, particularly children, regarding their education, career paths, social roles, and life choices, shaped by cultural, economic, and parental experiences (Singh & Pandey, 2024). These expectations play a crucial role in shaping career development, influencing

students' academic performance, career exploration, self-efficacy, and overall life satisfaction (Vautero et al., 2021; Vautero et al., 2020). Family expectations encompass career expectations (desired career type, income, and status), educational expectations (academic performance and education level), and social role expectations (traditional gender roles and family responsibilities) (Gao, 2023). In patriarchal cultures, families tend to place more emphasis on career self-efficacy, whereas in matriarchal cultures, families place greater emphasis on career outcome expectations (Prasetia et al., 2024). Gender bias in family educational expectations directly influences women's career expectations and career development paths (Hu et al., 2023).

Accordingly, this study defines family expectations for elderly care management students as the extent to which families anticipate and expect students to attain specific academic goals, pursue particular career paths, develop professional competencies, and assume social responsibilities within the field.

1.6.2 Financial Support

Parental financial support plays a crucial role in funding children's education, covering tuition, living expenses, and other education-related costs. Particularly during the college years, parents provide direct financial transfers and offer financial advice and guidance to help their children successfully navigate higher education (Mazurik et al., 2023). Family financial support also extends beyond education into young adults' early careers, helping them manage precarity and enabling them to invest in positive employment futures. These financial transfers from parents during their children's 20s and early 30s are used both to mitigate financial hardship and to facilitate career opportunities (Woodman et al., 2024). Family financial support within households extends beyond covering educational expenses; it also includes providing initial living funds and assisting adult children in securing homeownership. Intergenerational financial transfers, both routine and substantial, are a core mechanism through which families provide welfare beyond the household level. This type of financial assistance functions as a significant engine of wealth distribution within families, ensuring younger generations' economic stability and opportunities (Burchardt et al., 2021).

Accordingly, this study defines financial support for elderly care management students refers to the multifaceted economic assistance provided by parents, grandparents, or other family members to cover tuition, living expenses, and career development

opportunities during and after their education. Such support helps alleviate financial pressures during their studies, facilitates smoother transitions into professional roles, and enhances their career options and long-term planning within the elderly care management industry.

1.6.3 Informational Support

Family informational support refers to the process where parents, as part of family education, continuously provide knowledge and guidance about the importance of personal development, and future career options. Within the family, parents not only foster habits and values but also serve as the first source of educational and career-related information, helping children form early understandings of potential life and career paths (Besari, 2022). Parents provide essential information regarding educational opportunities, school selection, fields of study, and further prospects, which significantly influences children's academic planning and educational success. This type of informational support helps young people form clearer educational goals and align their academic decisions with their future aspirations (Jagielska, 2024). Beyond education, parents also offer valuable career-related information, including career pathways, labor market trends, and job search strategies. Such informational support helps children better understand different career options, develop realistic career expectations, and build greater confidence in their career decision-making abilities, contributing to higher levels of career decision-making self-efficacy (Salwani & Cahyawulan, 2022).

Based on the above research, this study defines informational support for elderly care management students as the provision of career-related knowledge, guidance, and advice from parents and family members, which aids students in understanding vocational opportunities, professional pathways, and future career prospects within the field of elderly care management.

1.6.4 Values and Beliefs

The values and beliefs of a family are the fundamental cornerstone of family culture, intertwining with each other to shape family members' behaviors, relationships, and intergenerational inheritance. Family values refer to the core concepts and evaluative standards held by individuals or the family as a whole regarding family roles, responsibilities, relationships, and goals. These concepts influence the behaviors, decisions, and attitudes of family members towards the outside world (Peng, 2021). Family

values are not only reflected in individuals' understanding of the meaning of family but also in defining intergenerational responsibilities, views on marriage, parenting attitudes, and the rights and obligations among family members (Mostafapour et al., 2025). Family beliefs refer to the shared beliefs and understandings among family members about the nature of the family, family roles, interaction rules, and family goals. These beliefs provide meaning to family life and guide daily interactions within the family (Huebner & Fickling, 2023). The family belief system is a unique network of beliefs within the family, defining "how the family should operate," including beliefs and expectations about parent-child relationships, spousal roles, intergenerational support, and conflict resolution (Huebner & Fickling, 2023).

Accordingly, this study defines values and beliefs for elderly care management students as a psychological foundation that influences their academic attitudes, career aspirations, professional identity formation, and sense of social responsibility within the field of elderly care management.

1.6.5 Occupational Identity

Occupational identity refers to how individuals perceive themselves within their professional roles, shaped by personal values, professional responsibilities, and the broader social and cultural context in which their work takes place (Walder et al., 2022). In the field of occupational therapy, occupational identity is further understood as the integration of "doing, being, becoming, and belonging" into a coherent sense of self within the professional role (French & Clarke, 2024). According to Hansson, Hansson et al. (2022), occupational identity is composed of three key elements: occupational identity construction (the process of developing professional self-concept), occupational identity discrepancy (the tension between self-image and actual work experience), and occupational identity disruption (where external changes or crises destabilize one’s professional self-concept). These components operate through three dimensions: being (the self in the role), doing (the actions and tasks), and being and doing with others (interactions and social recognition).

Based on the above research, this study defines occupational identity as the degree to which elderly care management students perceive and recognize themselves within their professional roles, encompassing their self-recognition, commitment, and sense of belonging to their chosen field.

1.6.6 Employability

Employability is a critical concept in the modern workforce, reflecting the skills, knowledge, and attributes that enable individuals to secure and maintain meaningful employment (Justyna et al., 2023). In the context of labor market, employability is understood as comprising career ability (technical and functional skills), resiliency (capacity to adapt and overcome challenges), and attitudes and personal attributes (openness to learning, teamwork, and motivation) (Weerasombat et al., 2022). In higher education, employability is increasingly viewed not only as a set of skills but as a learning process, where students must understand and articulate the value of their experiences and transfer them to workplace performance. This approach has emphasized communication skills, teamwork, self-management, and reflective learning as key contributors to employability (Reid et al., 2021). However, Corredor and Martinez (2020) argue that employability is often treated too simplistically, focusing only on personal attributes, while ignoring the complex interplay between individual factors, institutional environments, and labor market conditions (Corredor & Martínez, 2020).

Therefore, this study defines employability as the ability of elderly care management students to possess and demonstrate competencies that contribute to strong work performance in the elderly care industry, such as emotional intelligence, practical skills, creativity, problem-solving abilities, and work-based learning experiences.

1.7 Delimitation of the Thesis

While this study offers both theoretical and practical contributions to academic research on the employability of elderly care management students, certain limitations should be acknowledged for future exploration.

First, this study relied on literature from the core databases of Web of Science and CNKI to demonstrate the research gap, which may have led to certain limitations in the scope of the literature reviewed. Future research could consider expanding the range of data sources to include additional databases, offering a broader and more diverse research perspective. Furthermore, it is recommended that future studies compare the employability of elderly care management students with that of students in other management-related fields to develop a more comprehensive understanding. Such comparisons would help further enrich and refine the body of knowledge in this area.

Second, due to time and space limitations, this study only surveyed students, corresponding families and teachers from 10 universities offering elderly care management majors and employers from the top 10 elderly care institutions in Hubei Province, China. Although Hubei is a representative region for elderly care education and professional elderly care institutions, the generalizability of the findings may still be limited. Future research could expand the sample to include different regions across China and a wider range of higher education institutions to better assess whether the findings apply to the broader population of elderly care management graduates. This would help further strengthen the reliability and generalizability of the results.

1.8 Outline of the Thesis

This study consists of five chapters, each with its specific framework. Details are given below:

Chapter 1 summarizes the background, theoretical and practical significance, research questions and objectives, methodology, definitions of key terms, delimitations, and thesis outline.

Chapter 2 describes the literature review from the perspectives of research contexts, parent disciplines, and immediate disciplines and presents the theoretical model and hypothesis of the research.

Chapter 3 justifies the research paradigm, introduces the research design, data collection administration, data analysis and discusses the ethical consideration in the study.

Chapter 4 lists the quantitative and qualitative findings relevant to this study and explains how these findings answer the research questions.

Chapter 5 states the research discussion and conclusions, contributions to theories and practitioners, research limitations, and implications for further research.

1.9 Conclusion

This chapter begins by discussing the challenges posed by the global ageing tendency, continues to focus on the specific issues and obstacles that China faces in this ageing context. Then it examines potential solutions and emphasizes the importance of improving the employability of students majoring in elderly care management as a key strategy to address these challenges. Moreover, it points out that family environmental factors (including family expectations, financial support, informational support, values

and beliefs) influencing the employability of students majoring in elderly care management through their occupational identity. Additionally, it highlights two research gaps: 1) the lack of empirical studies on the specific impact of family expectations on the employability of students majoring in elderly care management; and 2) the lack of empirical studies on the specific impact of value and beliefs on the employability of students majoring in elderly care management. Finally, it also provides the study's theoretical and practical significance, and the research questions and the research objectives to be addressed.

CHAPTER 2
LITERATURE REVIEW

This chapter provides a theoretical foundation for developing the employability of higher education students majoring in elderly care management, within the context of the family environment, by reviewing recent research in this area. It is organized into five sections: the context of the study, the parent disciplines, the immediate disciplines, the research hypotheses and empirical model, and the conclusion.

First, this chapter presents the context of the study by addressing the following points: 1) the relationship between the elderly care industry in China and higher education students majoring in elderly care management; 2) an analysis of existing research on the factors affecting the employability of students; and 3) an examination of the aging population in Hubei Province and the resources available in higher education for elderly care management.

Second, based on existing theories (ecological systems theory, identity control theory), this study discusses the path relationships in the empirical model of this study. Finally, the previous research findings are utilized to guide the hypotheses of this study and provide theoretical guidance and rationale for constructing the empirical model of this study.

2.1 Contexts of the Study

2.1.1 Elderly Care Industry of China and the Higher Education Students Majoring in Elderly Care Management

According to the 2023 World Social Report, the United Nations and global institutions generally define individuals aged 60 and above as older populations, with 65 years serving as a further classification standard. This reflects the typical retirement age in many developed economies and aligns with global statistical and policy frameworks (United Nations Department of Economic and Social Affairs, 2023). Generally, older population exhibits diverse characteristics. In terms of older population health, some maintain a high quality of life through healthy lifestyles and comprehensive healthcare,

while others, particularly those with lower socioeconomic status, face significant health inequalities, such as higher rates of chronic illnesses and limited access to medical resources (Aarón et al., 2019). The prevalence of chronic diseases and physical decline further heightens their need for medical interventions and psychological support (Pazan & Wehling, 2021). Economically, while a part of older population achieve financial independence through pensions and savings, others experience financial challenges, requiring continued work or family support. This increases informal employment rates and exposes them to risks such as poverty, food insecurity, and inadequate housing (EIattar & Fonseca, 2022).

Population ageing is an irreversible global trend. Further population ageing is driven by more people living longer, healthier lives. As fertility levels fall, the share of younger people declines, while the shares of working-age adults and, eventually, older people go up (Chandran, 2020). The number of people aged 65 years or older worldwide is projected to more than double, rising from 761 million in 2021 to 1.6 billion in 2050 (United Nations Department of Economic and Social Affairs, 2023) (Figure 2.1).

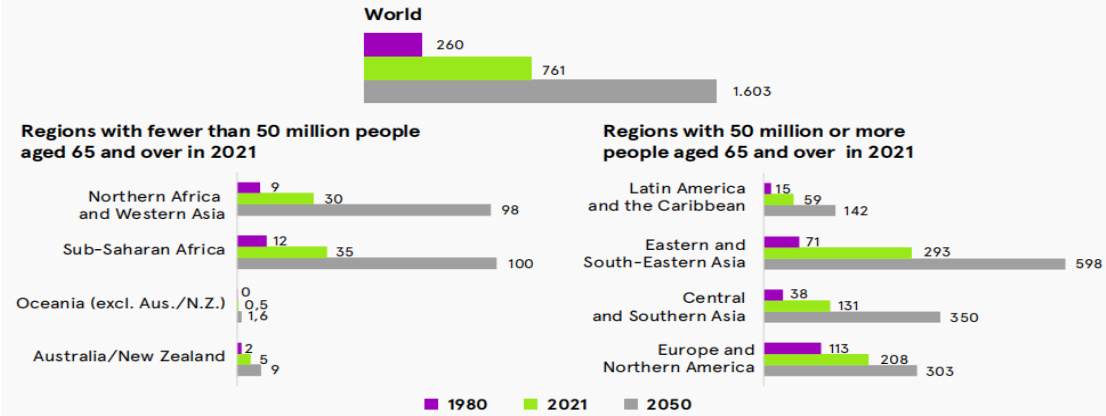

Figure 2.1 Number of people aged 65 years or above (in millions), World and Regions, 1980, 2021, and 2050

Source: Leaving No One Behind in an Ageing World (United Nations Department of Economic and Social Affairs, 2023).

Most of the more developed countries have experienced population ageing over several decades and are already in advanced stages of this process (Kosar, 2023). By contrast, many developing countries face rapid transitions towards ageing societies (Arun & Holdsworth, 2020). In developed countries, aging populations have been a gradual process, with clear trends and forecasts enabling governments to plan long-term care

strategies. For instance, Japan's elderly population began growing in the mid-20th century, and the country has had time to develop its Long-Term Care Insurance System (LTCI), which has become a model globally. Over decades, Japan invested in a combination of public and private care systems, created a workforce of professional caregivers, and developed advanced technologies such as robot-assisted care. In 2019, according to the Ministry of Health, Labor and Welfare, there were 1,119,158 home nurse users in Japan, and around 70% of those services were provided through the long-term care insurance (Kamio & Espinoza, 2023). Similarly, Germany's aging population has driven the development of a social insurance system that covers elderly care, integrating it with healthcare, social services, and even legal frameworks. Over time, Germany has created a more holistic model of care, ensuring that the elderly receive both physical and mental healthcare, often through publicly funded services. The steady pace of aging in these developed countries allowed for the gradual establishment of elderly care policies, the professionalization of caregiving, and the growth of elderly care infrastructure. In contrast, developing countries like China are undergoing a much faster aging process, which poses a crisis of adaptation. China's elderly population has grown from around 10% of the total population in 1990 to 18.7% in 2020 (Liu et al., 2022). This swift increase has led to rising demand for elderly care services, far outpacing the availability of institutional care, professional caregivers, and government policies designed to support the elderly (Yi & George, 2000). One of the most pressing issues for China is the severe shortage of trained caregivers. In countries like Japan and Germany, caregiving has evolved into a professionalized workforce with clear training programs and career paths. In China, however, caregivers are often untrained and rely heavily on informal family caregiving, particularly in rural areas. This puts immense pressure on families, many of whom are ill-prepared to meet the medical, emotional, and physical needs of elderly family members. Additionally, the low wages and poor working conditions for caregivers contribute to high turnover rates and a lack of qualified staff. Thus, China faces particularly intense pressure from population ageing due to its large population base and rapid demographic shifts (Xiao, 2023).

The rapid increase in the older population of China has led to a mismatch on supply-demand of elderly care industry, where the availability of services is not keeping pace with the rising demand (Luo et al., 2021). While the government has made efforts to

integrate medical and elderly care services, significant imbalance remain between the supply and demand for elderly care industry (Yan & Ali, 2024). As a result, the ageing population has created substantial challenges for the elderly care industry in China (Bao et al., 2024). Students majoring in elderly care management, as the critical support of the elderly care industry, also need to continuously improve their employability to face the challenges brought about by the trend of an aging society. Below is the relevant information:

2.1.1.1 Elderly Care Industry of China

By 2024, more than 20% of China's population were beyond the age of 60 due to rising life expectancy and the implementation of the one-child policy (Wang, 2023). By 2035, the population of those aged 65 and above is expected to 312.88 million according to Figure 2.2, making China as one of the fastest-ageing countries in the world (Table 2.1).

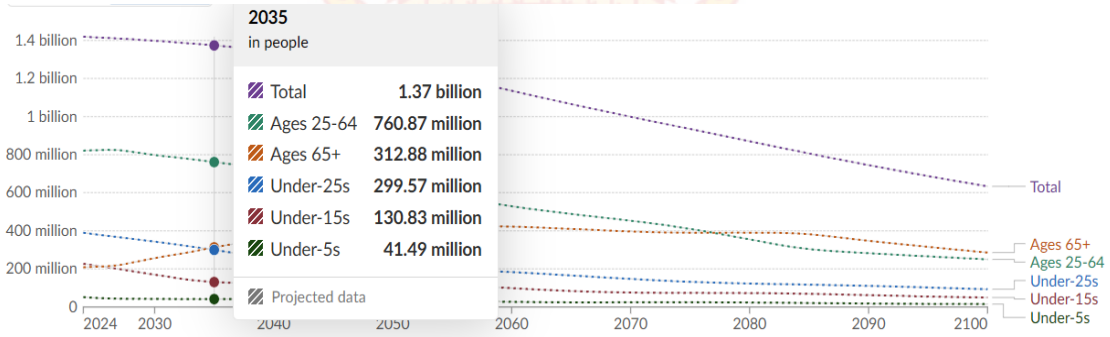

Figure 2.2 Population prospects by age group, China (2035)
Source: Age Structure (Ritchie et al., 2024)

Table 2.1 Countries and areas with the largest shares of people aged 65 years or over, 1980, 2021 and 2050

	1980		2021		2050	
Rank	**Country or Area**	**Percentage Aged 65+**	**Country or Area**	**Percentage Aged 65+**	**Country or Area**	**Percentage Aged 65+**
1	Sweden	16.3	Japan	29.8	China	40.6
2	Germany	15.7	Italy	23.7	Republic of Korea	39.4

Table 2.1 (continued)

	1980		2021		2050	
Rank	**Country or Area**	**Percentage Aged 65+**	**Country or Area**	**Percentage Aged 65+**	**Country or Area**	**Percentage Aged 65+**
3	Austria	15.4	Finland	22.9	Japan	37.5
4	United Kingdom	14.9	Portugal	22.6	Italy	37.1
5	Norway	14.8	Greece	22.5	Spain	36.6
6	Belgium	14.4	Bulgaria	22.4	Greece	34.8
7	Denmark	14.4	Puerto Rico	22.4	Portugal	34.5
8	France	14.0	Germany	22.2	Singapore	34.2
9	Switzerland	13.8	Martiniq ue	22.1	Kuwait	33.6
10	Luxembourg	13.6	Croatia	22.0	Croatia	32.8

Source: United Nations Department of Economic and Social Affairs (2023)

Note: For countries and areas with a population of 90,000 or more by mid-2021.

The concept of institutionalized elderly care still faces resistance in China, where filial piety is deeply ingrained in the culture. Many elderly individuals, particularly in rural areas, expect to be cared for by their children, as the family-based care model remains dominant. This cultural expectation limits the acceptance of professionalized care, creating a significant gap between the demand for and supply of elderly care services (Guo & Dong, 2024). The aging population in China has placed immense pressure on the elderly care industry, manifesting in the following areas: **1) Workforce shortages:** As the diverse demand for elderly care services increases due to the number of ageing populations mentioned above, the need for elderly care is not only limit in basic services such as clean and diet,but also extends to more specialized services like medical care, psychological support, and recreational activities tailored to the older people's specific needs. However, the reality is that China's elderly care industry is facing a severe shortage of professional talent. According to relevant statistics, as of the end of 2022, the number of elderly people aged 60 and above in China has reached 280 million (Han, 2023). As of 2021,

approximately 45 million older adults in China were living with disabilities or dementia (Zhejiang Provincial Department of Natural, 2022). However, by 2021, there were only approximately 0.5 million certified elderly care workers in China. Internationally, a commonly accepted standard is a ratio of three disabled elderly individuals to one caregiver. Based on this benchmark, China would require at least 15 million elderly care workers. According to current estimates, the shortage of elderly care personnel ranged from 10 to 15 million (Human Resources and Social Security Information Network, 2024). The shortage of professional elderly care management workers means that many older people are unable to receive timely assistance and personal care. **2) Limited infrastructure:** The index of the number of beds for 100 people in the spatial configuration of elderly care institutions continued to increase, but the actual utilization rate of beds continued to decline, which was only 61.3% in 2030 (Zhu, 2022). Zhejiang Provincial Government has proposed that not only the number of beds per 1,000 elderly persons should be counted, but also the distance between the facilities and the homes of the elderly should be taken into account (Huang & Dai, 2024).

In order to solve the problem above, China government has taken a series of concrete measures to promote the development of elderly care services. 1) The Chinese government has taken concrete steps to strengthen elderly care services by promoting the development of geriatrics and rehabilitation departments across various medical institutions (Huang et al., 2024). 2) At the same time, the government has increased investment in nursing homes, community care centers, and home care services, broadening the coverage of elderly care infrastructure and promoting the integration of medical and nursing care services (Zhang et al., 2021).

However, despite the various measures taken by China government, the shortage of professional talent in the elderly care industry remains critical. On one hand, many young people are reluctant to enter this field due to high work intensity, relatively low wages, and limited career development opportunities. On the other hand, the current training system for professional talent in the elderly care industry has not effectively met market demand, further exacerbating the supply-demand imbalance. In conclusion, China urgently needs to address the shortage of skilled elderly care professionals to fill the supply-demand talent imbalance in the country's elderly care industry to solve the above problem ageing population brought. The most innovative approach to resolving this talent

imbalance is to focus on the higher education students majoring in elderly care management (Liang et al., 2023). These students can bring fresh perspectives, advanced techniques, and a deeper understanding of the evolving needs of older adults, which is particularly crucial when addressing the diverse types of healthcare centers for older adults, such as long-term care institutions, day-care centers, and community health services. By integrating innovative ideas and modern practices, students can help optimize these healthcare environments, ensuring they are better equipped to meet the increasingly complex and varied demands of the aging population.

2.1.1.2 The Higher Education Students Majoring in Elderly Care Management

The elderly care management program in higher education is specifically designed to meet the demands of an ageing society by preparing professionals to manage elderly care service institutions effectively, the primary objective is to develop versatile professionals who can thrive in healthcare settings, elderly care institutions, and related service sectors (Bladt et al., 2023). Through a comprehensive academic curriculum, the higher education students majoring in elderly care management develop essential skills and professional competencies needed for the administration of elderly care services (Hsieh et al., 2021). Graduates from higher education programs majoring in elderly care management are equipped with advanced nursing skills and are well-prepared to manage and deliver a range of services, including long-term care, rehabilitation, health assessments, and psychological support for the older adults (Itoh et al., 2024).

In the context of global aging, Japan has developed training programs for community-based and end-of-life care, enhancing staff knowledge and confidence in providing aging-in-place services (Nagata et al., 2021). Additionally, the concept of "care literacy" has been proposed to promote inclusive community care through grassroots activities (Costantini et al., 2024). Sweden is renowned for its equitable healthcare services and comprehensive support policies for formal caregivers. Furthermore, digital solutions are increasingly integrated into elder care, offering support for caregivers and improving elder care accessibility (Hunt, 2021). Germany distinguishes itself through its high-quality education and vocational training in elder care, supported by its robust dual education system. This system prioritizes mandatory education in geriatrics and gerontology, reflecting global best practices (Furukawa et al., 2021). The Netherlands is famous for its

innovative, community-based elder care model, incorporating cutting-edge care technologies. Efforts to enhance digital inclusion and e-health literacy among seniors aim to integrate digital solutions for health promotion, fostering healthy and active aging (Aung et al., 2022). Canada has implemented culturally safe dementia care training for nurses, especially in Indigenous communities such as First Nations, thereby increasing the health system's responsiveness and inclusivity in elderly care education (Hulko et al., 2021). Table 2.2 below illustrates the current status of elder care management in higher education for above five representative countries in the elder care industry.

Table 2.2 Status of Elder Care Management in Higher Education in Different Countries

Country	Status of Elder Care Management in Higher Education
Japan	Universities and vocational colleges offer programs in elder care and health management. Focusing on skills in caregiving robotics, home care, and health management. Emphasized community engagement through projects directly serving the elderly. Introduced caregiving technology courses to train students in robotics and AI.
Sweden	Higher education institutions provide program in gerontology, nursing science, and health policy. Emphasizing interdisciplinary education. Collaborates with healthcare institutions to optimize policies and practices. Promotes 'lifelong learning' with advanced training and certifications for caregivers.

Table 2.2 (continued)

Country	Status of Elder Care Management in Higher Education
Germany	Universities offer master's programs in elder care management and health sciences. In close collaboration with healthcare institutions and nursing homes. Incorporates law, psychology, and sociology into nursing curricula to cultivate multi-skilled caregivers. Encourages cross-national exchanges to learn from global elder care practices.
The Netherlands	Universities provide programs in elder care and health management. Focus on technology application and community care. Develops health technology courses (e.g., smart home systems) to familiarize students with digital care trends. Collaborates with government on long-term care policy research projects.
Canada	Universities offer nursing science and gerontology programs. Focusing on elder care in multicultural contexts. Includes cultural diversity and mental health care modules in course design. Offers interdisciplinary courses combining nursing and social work to train well-rounded care managers.

Source: Leaving No One Behind in an Ageing World (United Nations Department of Economic and Social Affairs, 2023)

By analyzing Table 2.2: Status of Elder Care Management in Higher Education in Different Countries, it becomes evident that the evolving landscape of China's elderly care industry demands a multidisciplinary approach. This approach should involve professionals from various fields, including geriatricians, physiotherapists, dietitians, and mental health experts. Additionally, there is an urgent need for trained talent proficient in utilizing new technologies and addressing the unique psychological and social challenges faced by the elderly population. Therefore, the key to addressing this talent imbalance lies in focusing on higher education students majoring in elderly care management, the reasons are as follows: 1) By harnessing the creativity and tech-savvy

skills of these young professionals, China can foster a new model of elderly care that is more efficient, personalized, and adaptable to future challenges. 2) By enhancing the employability of the higher education students majoring in elderly care management, it can ensure that graduates are well-prepared to enter the workforce with the skills and passion necessary to innovate and lead in the elderly care industry. 3) Giving priority to recruit higher education students majoring in elderly care management not only tackles the current talent gap but also lays the foundation for a long-term, sustainable solution.

This section investigates the relationship between China's elderly care industry and the higher education students majoring in elderly care management. It begins with discussing the current state of development in China's elderly care industry and the problems it faces.Then it analyzes, within the context of China's elderly care industry, the higher education students majoring in elderly care management are the key to addressing the current imbalance in the supply of talent. Finally, analyzing the traits of higher education students majoring in elderly care management suggests that improving their employability can contribute to the sustainable development of the elderly care industry. Thus, it is to explain further the factors that affect the employability of the higher education students majoring in elderly care management in the next section.

2.1.2 Employability of the Higher Education Students Majoring in Elderly Care Management

The current studies indicate that the factors affecting employability of students include not only psychological capital, family support, workload management, but also attitude toward elderly care, self-perceived competency, interprofessional education, and occupational identity (Table 2.3):

Table 2.3 Factors Affecting Employability of Students

Source	Factors Affecting Employability of Students	Subject	Conclusion
Liang et al. (2023) Li and Zhong (2022) Liu and Dai (2022)	Psychological capital, family support, workload management, satisfactory internship conditions	Influencing factors of employability of students majoring in elderly care	Retention influenced by psychological capital, family support, workload, and satisfactory conditions
Ng et al. (2021) Smith (2023) Han et al. (2020) Owen et al. (2022)	Attitude towards elderly care, self-perceived competency, inter-professional education	The factors affecting the employability of nursing students in elderly care	Increased competency in elderly care, but no significant change in career interest
Şahin et al. (2022) Mazurik et al. (2023)	Gender, prior experience with elderly, attitudes toward elderly	Nursing students' willingness to care for older adults	Moderate willingness to care for older adults; influenced by gender and prior experience
Alhwaiti (2023) Donizzetti (2019) Pillemer et al. (2022)	Knowledge about elderly care, ageism attitudes, education quality	How do students' attitudes and knowledge levels about aged care affect their employment choices	Negative attitudes toward aging correlate with lack of knowledge; need for improved education

Table 2.3 (continued)

Source	Factors Affecting Employability of Students	Subject	Conclusion
Kim (2014) Koninsky (2023) Schram et al. (2023)	Demographic characteristics, professional recognition, career development opportunities	Low willingness of nursing students to engage in elderly care management	Low willingness to engage in elderly care management, influenced by demographics and career prospects
Lun (2022) Melchiorre et al. (2022) Cannon and Barry (2023)	Family caregiving responsibilities, emotional well-being, relationship quality with family	How family care responsibilities affect college students' educational and career planning	Positive attitude towards caregiving despite negative impacts on education and work life
Kong et al. (2019) Hua (2024) Chia and Malhotra (2023) Jang et al. (2024)	Family environment, caring character, environmental awareness	The role of family environment in shaping students' caring for the environment and cultivating character	Family environment plays a significant role in shaping students' caring character
Tomlinson and Jackson (2021) Zhang et al. (2023) Vessaz et al. (2022)	Occupational identity formation, social and cultural capital, identity mediation	The relationship between students' occupational identity and employability	Strong occupational identity enhances employability through familiarity with targeted employment

Table 2.3 (continued)

Source	Factors Affecting Employability of Students	Subject	Conclusion
Walder et al. (2022) Nur et al. (2024) Shikata et al. (2021)	Occupational identity formation, patient-centeredness, holistic care, compassion	The development of occupational identity in elderly care	Occupational identity related to elderly care builds through compassion, collaboration, and holistic care

The above studies showed that the psychological capital of students, such as self-efficacy and resilience, significantly influenced their employability. Factors like family support and workload management also played crucial roles in enhancing retention and motivation in the workplace (Fu et al., 2024). The mean scores for self-perceived competency increased significantly after the course, and students with higher self-perceived competency were more interested in geriatric medicine. This suggested that improving students' perceived competencies in elderly care can enhance their employability and willingness to work in the field (Ng et al., 2021). Gender, contact experience with older adults, and volunteer experience with the elderly were significant factors influencing nursing students' attitudes toward older adults with dementia, which in turn affects their perceived preparedness and future employability in elderly care (Grey et al., 2024). Although existing literature has examined employability of students, there are relatively few studies on the employability of higher education students majoring in elderly care management. The limited studies available mainly focused on factors like psychological attributes, knowledge, and experience, but these studies do not entirely explain the factors that affect the employability of higher education students majoring in elderly care management in the context of family environment.

On the one hand, family is critical in providing the emotional and financial backing which is necessary for students to pursue and complete their education in elderly care management. According to a study on interns majoring in elderly care service in Chinese colleges, even if students face challenges such as unsatisfactory internship conditions or

low compensation, those with strong family support are more likely to persist and complete their internships successfully. The study highlighted that family support can help mitigate the negative impact of a heavy workload or less-than-ideal working conditions, thereby enhancing student retention and employability (Suzanne et al., 2023).

On the other hand, the family environment influences students' attitudes and willingness to work with older populations, which is a significant factor in their employability in elderly care management. Research showed that students who grow up in environments where they have frequent and meaningful interactions with older family members, such as grandparents, tend to have more positive attitudes toward elderly care and are more likely to choose careers in this field. Emotional closeness with older adults during childhood or having experience caring for an older person positively impacted their desire to work with older adults in professional settings. This emotional and experiential grounding provided by family environments makes these students more prepared and motivated, thus more employable in elderly care management roles (Chidebe et al., 2023).

The future of the elderly care industry is closely linked to the quality of life that family members themselves will experience in their old age. This connection underscores the unique and significant impact of the family environment on the employability of higher education students majoring in elderly care management. Such deep-rooted family needs directly shape these students' career choices and skill development. The distinct influence of the family environment allows students to become more acutely aware of the importance of the eldercare industry, enabling them to demonstrate a higher level of professional expertise and emotional empathy in their careers.The family environment exerts a dual driving force on the employability of higher education students majoring in elderly care management. On one hand, the experiences of caring for ageing parents and other older people within the family serve as their initial introduction to the profession and provide valuable practical experience. On the other hand, their own plans for future aging motivate them to continually learn and improve.

The family environment plays a crucial role in shaping students' employability by influencing academic achievement, satisfaction, and readiness for the job market.The family environment including financial support, expectation management, informational support, and family values as shown in Table 2.4. The supportive family environment

provides the necessary resources and motivation for students to succeed academically and professionally.

Table 2.4 Research Findings Related to Family Environment

Study	Key Focus	Findings Related to Family Environment
Zhao and Zhao (2022)	Impact of family environment on academic achievement	The study has found that the family environment, including parental expectations and the quality of parent-child interactions, significantly affects students' academic performance.
Huang et al. (2023)	Influence of family environment on secondary school students' academic performance	The study has emphasized that family income (financial support), parental engagement, and values and beliefs (e.g., parenting styles) significantly affect students' academic achievements, which indirectly impacts employability by influencing career readiness and skills.
Vautero et al. (2021)	Family influence on academic and life satisfaction	The study has found that family expectations and financial support are critical for students' academic and life satisfaction, which are important for employability. High family expectations can have negative effects if perceived as pressure, while a supportive family environment positively influences students' career outcomes.
Gao (2023)	Influence of parents' career expectations on students' self-career expectations	The study shows that parents' career expectations significantly impact middle school students' self-career expectations, emphasizing the importance of parental guidance and education in the child's career exploration process. This expectation plays a crucial role in students' career choices and development.

Occupational identity positively affected the employability of practitioners, and when practitioners strongly identify with a certain occupation or industry, it helps them better establish employability (Vautero & Silva, 2022). As a key mediating variable, occupational identity can explain how the family environment (family expectations, financial support, informational support, values and beliefs) influences occupational identity of students majoring in elderly care management, thus continuing to further affects their employability. First of all, family expectations can set clear career goals and directions for students, enabling them to develop relevant skills more specifically, accumulate internships and work experience, and ultimately enhance their employability (Gao, 2023). Although the current state of the elderly care industry was not very optimistic, family members of highly educated students majoring in elderly care management still hold positive expectations for the industry because it is closely related to the future quality of life of their older family members, particularly older relatives (Koçak et al., 2021). This connection between the development of the elderly care industry and their future quality of life fostered a positive view of the industry's future, and family members' positive views helped students to formulate a positive occupational identity, ultimately improving their employability (Zhang et al., 2023).

Secondly, when families provide sufficient financial support, students can focus more on their studies and career development, maintaining confidence in the elderly care industry. This confidence fosters a sense of occupational identity for the students majoring in elderly care management, which boosts their motivation to enhances their employability. For students majoring in elderly care, insufficient financial support from their families may force them to rely on scholarships, student loans, or part-time jobs to continue their education (Kir et al., 2021). At the same time, widespread perceptions of low wages and job instability in the elderly care industry may cause students to question their financial future and career prospects, particularly their ability to repay educational debts (Moores & Burgess, 2023). Faced with these pressures, some students might reconsider their career paths, with a few even abandoning plans for further studies or work in elderly care, choosing instead to enter fields perceived to offer higher pay and greater job security (Liu et al., 2023). So this financial-driven career shift not only impacts students' occupational identity but could also furthermore hinder student's employability and talent development.

Thirdly, effective informational support could help students better understand industry dynamics and employment opportunities, enhance their occupational identity, and improve their employability through the development of reasonable career planning (Kim et al., 2024). Informational support provided by family members can help individuals to make academic and career decisions (Tuma et al., 2025). By providing insights and guidance on career development, families could help students gain a deeper understanding of the current state of the elderly care industry, its future prospects, and the specific challenges it may present (Katz et al., 2018). This informational support not only boosted students' confidence in the elderly care sector but also helped them make more informed and personally suitable career choices. (Wasmani et al., 2022). Particularly in the elderly care field, family-provided informational support could further solidify their occupational identity, then commitment to pursuing a career and enhance their employability in this industry (Ruggiano et al., 2024). When family members shared industry knowledge and employment opportunities, students not only gained a clearer understanding of the societal contributions of their chosen profession but also became more engaged in their career development, reinforcing their occupational identity which could further enhance their employability(Ho et al., 2023).

Finally, value and beliefs were often conveyed to the next generation through the behavior and attitudes of family members, influencing students' direction and motivation in career choices (Tuma et al., 2025), especially in families with deep cultural backgrounds (Hinduja et al., 2024). Values and beliefs not only affected students' career choices but also deeply influence their decision-making, particularly in fields like elderly care, which is widely recognized for its social contribution but offers relatively lower economic rewards (Ng & Indran, 2021). A study has found that students from families that prioritize social responsibility tend to show a stronger employability when choosing the elderly care industry. These families encourage students to pursue careers that make a positive contribution to society, viewing such professions as having intrinsic value. As a result, students often demonstrate greater commitment and enthusiasm, formulate occupational identity, and establish greater employability when selecting elderly care as a career (Kilaberia, 2020).

The above research clearly demonstrated that family environment play crucial roles in shaping the employability of students majoring in elderly care management through

family expectations, financial support, informational support, values and beliefs, and these four variables affect students' employability by influencing their occupational identity jointly (Wang et al., 2024). Through fostering a strong occupational identity, these four family environmental factors empower students to adapt to the evolving demands of the elderly care industry, ultimately contributing to their career readiness and long-term professional growth in elderly care management (Zhang & Li, 2023).

2.1.3 The Higher Education Students Majoring in Elderly Care Management in Hubei Province

The primary sample of this study comes from Hubei Province, in the mid-region of China. Its location is shown in Figure 2.3:

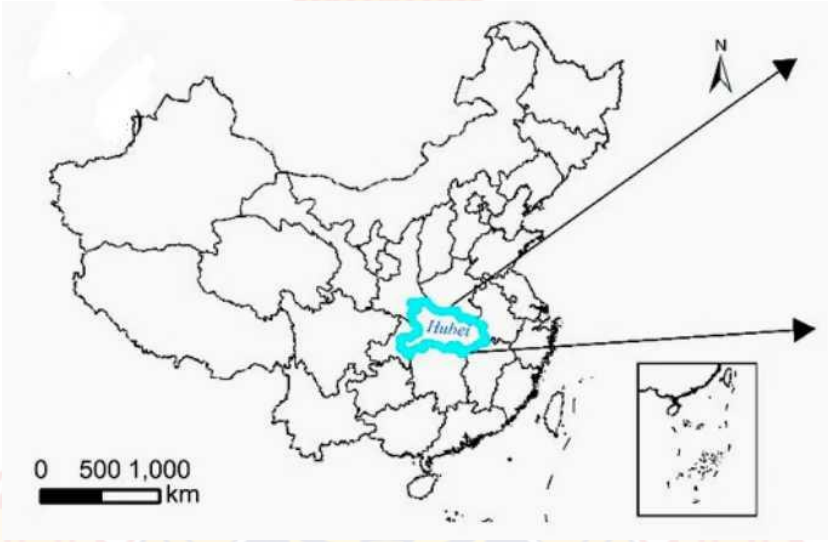

Figure 2.3 Location of Hubei Province in China
Source: Spatial Disparities and Correlated Variables of Community Care Facility Accessibility in Rural Areas of China (Yu et al., 2021).

Due to its significant aging population and abundant higher education resources in elderly care area, Hubei offers a valuable case for understanding how to enhance the employability of students in elderly care management programs to meet the growing needs of an aging society. Details are as follows:

1) The ageing of population in Hubei Province is remarkable. Hubei had a population of 58.44 million at the end of 2022, with 9.75 million of the population aged 65 and above. The percentage of the population over 65 in Hubei Province was 16.69% as

shown in Table 2.5, which is the top 1 among the mid-region of China, highlighting the significant ageing trend (National Bureau of Statistics of China, 2023).

Table 2.5 Population Statistics of Central China Provinces at the end of 2022

Province	Population aged 65+ (10,000s)	Total Population (10,000s)	Percentage of Population aged 65+	Ranking
Hubei	975.3	5844.0	16.69%	1
Hunan	1090.4	6764.9	16.12%	2
Anhui	991.2	6276.3	15.79%	3
Henan	1471.2	10111.3	14.55%	4
Shanxi	516.3	3565.5	14.48%	5
Jiangxi	604.4	4638.0	13.03%	6

Source: China Statistical Yearbook (National Bureau of Statistics of China, 2023).

The Elderly Dependency Ratio refers to the proportion of the population aged 65 and over relative to the working-age population between 15 and 64 years old (Xu et al., 2022). It is an important indicator used to measure the burden of supporting the older adults within a country's or region's working-age population. Specifically, if the elderly dependency ratio is 20%, this means that for every 100 working-age people, there are 20 older people aged 65 and over who require support (United Nations, 2024). The higher the ratio, the greater the number of older people that the working population needs to support, potentially increasing the social and economic burden. In Hubei province, the elderly dependency ratio is 28.35% in the end of 2022, which indicateed a more significant burden in supporting the older population compared to the national average in China (National Bureau of Statistics of China, 2023).

This suggested a rapid aging process in Hubei province, similar to trends observed across China's central regions. Thus, selecting the higher education students majoring in elderly care management in Hubei province could provide insights into addressing the challenges of elderly care professionals in an ageing society. Additionally, understanding the regional needs and resources available for elderly care in Hubei can help to better equip students with the skills needed for the growing elder care industry.

2) Hubei Province is abundant in higher education resources of elderly care management. Hubei province is the first province in the mid-region of China to establish higher education programs in elderly care management. Hubei province had 134 higher education universities, and its educational resources ranked among the top ten in China, with an enrollment of 555,794 students and around 470,661 graduates by the end of 2022 (Hubei Provincial Bureau of Statistics, 2023). According to data from the official website of the China education examination, there are currently 30 universities nationwide offering elderly care-related programs, with 15 of them located in Hubei. Among the following 15 higher education universities in Hubei (Table 2.6), Hubei College of Chinese Medicine was ranked among the top 10 institutions in Hubei for traditional Chinese medicine (Hubei College of Chinese Medicine, 2024). The college's elderly care management program, established in 2010, integrated traditional Chinese medicine with modern healthcare practices, focusing on holistic care for aging populations. Additionally, Shanghai Ranking's Best Chinese Universities consistently placed Hubei College of Chinese Medicine as one of the best traditional Chinese medicine schools in China, further highlighting its reputation in elderly care education. Hubei Health Vocational College was ranked among the top 5 vocational institutions in Hubei for health-related programs (Hubei Health Vocational College, 2024). Its elderly care and nursing program was known for its strong focus on practical training and partnerships with elderly care homes across the province. This ranking was further confirmed by EDURANK, which highlighted the college's achievements in providing specialized education for elderly care and nursing professionals. Huanggang Polytechnic College was ranked among the top 10 vocational institutions in Hubei for health and social work disciplines (Huanggang Polytechnic College, 2024). The college launched its elderly care management program in 2015, and it was particularly known for its hands-on approach, providing students with internships in elderly care facilities to prepare them for the workforce. This strong vocational training and practical experience earned the college recognition in the field of elderly care education.

Table 2.6 List of the 15 Universities in Hubei Offering Elderly Care Management Major

Item	University	Website of University
1	Hubei College of Chinese Medicine	https://www.hbzyy.net
2	Hubei Polytechnic Institute	https://zs.hbvtc.edu.cn/
3	Science and Technology College of Hubei University of Arts and Science	https://zsw.hbasstu.net/
4	Hubei Health Vocational College	https://hbjk.chunlaiedu.com/
5	Hubei Three Gorges Polytechnic College	https://www.tgc.edu.cn/
6	Xianning Vocational Technical College	https://www.xnec.cn/
7	Wuhan Social Work Professional College	https://www.whmzxy.edu.cn/zsw/
8	Huanggang Polytechnic College	https://www.hbhgkj.edu.cn/
9	Ezhou Polytechnic College	https://www.ezu.cn/
10	Huanggang Vocational College of Science and Technology	https://www.hbhgkj.edu.cn/
11	Hubei Preschool Teachers College	https://www.hbptec.edu.cn
12	Xianming Vocational Technical College	https://www.xmvtc.edu.cn
13	Suizhou Vocational and Technical College	https://www.svztc.cn
14	Tianmen Vocational College	https://www.tmvc.cn
15	Changjiang Institute of Arts and Technology	https://www.ciat.edu.cn

These higher education universities provided training of students majoring in elderly care management not only covers fundamental knowledge of elderly care, but also specialized areas such as psychological care, rehabilitation care, and geriatric nursing, reflecting a significant educational capacity and output in elderly care, further supporting the province's strength in cultivating elderly care professionals.

Therefore, studying the higher education students majoring in elderly care management in Hubei province holds significant practical value. It not only contributes to optimising the educational reform of elderly care management in China but also enhances the employability of students in this field. Then to create broader economic opportunities to address the growing challenges of China's ageing population. By fostering the

development of Hubei's elderly care industry, this initiative can also promote the synergistic growth of related health industries in Hubei and across the nation.

3) Hubei province has substantial resources in professional elderly care institutions. In China, elderly care service institutions are classified and evaluated into five grades, ranging from Grade 1 to Grade 5, from lowest to highest (Department of Civil Affairs of Hubei Province, 2023). The higher the grade, the stronger the institution's overall capabilities. The grade is represented by a star symbol, valid for three years. The evaluation is based on the national standard "Classification and Evaluation of Elderly Care Institutions," covering aspects such as grade symbol, basic requirements, staffing requirements, service provision, facilities, and operational management. This evaluation is crucial for improving the quality of elderly care services, regulating the market, while also providing a reference for choosing elderly care institutions. By the end of 2023, 165 elderly care institutions in Hubei Province had been rated three stars or higher, following review and public announcement by the Hubei Province Elderly Care Institution Rating Committee, and confirmation by the Department of Civil Affairs of Hubei Province. This included 53 four-star institutions and 7 five-star institutions. Table 2.7 lists the latest selection of 4 five-star institutions and 10 four-star institutions, as rated by the Hubei Department of Civil Affairs in 2023.

Table 2.7 List of Rated Elderly Care Institutions in Hubei Province for 2023 (five-star and four-star)

Item	Elderly Care Institutions	Officially Granted Rating
1	Social Welfare Institution of Wuhan	★★★★★
2	Taikang Elderly Care Institution of Wuhan	★★★★★
3	Social Welfare Social Welfare Institution of Wuhan Hanyang District	★★★★★
4	Social Welfare Social Welfare Institution of Wuhan Jianghan District	★★★★★
5	Social Welfare Institution of Xiaogan	★★★★
6	Social Welfare Institution of Huangshi	★★★★

Table 2.7 (continued)

Item	Elderly Care Institutions	Officially Granted Rating
7	Sunshine Welfare Institution of Guangshui	★★★★
8	Zhaoshang Guanyi Elderly Care Institution of Wuhan Hanyang District	★★★★
9	Social Welfare Institution of Jiangling	★★★★
10	Elderly Care Service Center of Wuhan Qiaokou District Yijia Street	★★★★
11	Kangyuan Elderly Care Service Center of Wuhan	★★★★
12	Uniunian Elderly Care Service Center of Wuhan	★★★★
13	Elderly Care Institution of Wuhan Economic and Technological Development Zone (Hannan District)	★★★★
14	Social Welfare Institution of Wuhan Wuchang District	★★★★

Notes: In China, elderly care institutions are rated from 1★ to 5★ (lowest to highest), with each star denoting a grade based on overall capabilities; ratings are valid for three years.

Source: Public Notice on the 2023 Elderly Care Institution Rating Results in Hubei Province (Department of Civil Affairs of Hubei Province, 2023)

Hubei Province's abundant elderly care resources have not only established a model of professionalism and standardization in the local elderly care industry but also fostered healthy competition within the sector, elevating the overall quality of elderly care services in Hubei to a leading level in China. This resource advantage also provides high-quality internship platforms and practical opportunities for students in elderly care programs, enabling them to gain valuable experience in a real, high-standard environment, further supporting the growth of skilled professionals. For instance, the training base jointly established by Hubei College of Chinese Medicine and Social Welfare Institution of Wuhan covers an area of 1,500 square meters and includes multiple training rooms for traditional Chinese medicine rehabilitation, massage therapy for older adults, and nursing skills simulation. At the same time, they have developed training programs like the Traditional Chinese Medicine Nursing Skills Enhancement Project and the Middle-aged and Elderly Health Management Program, combining traditional Chinese medicine

features with modern elderly care techniques to provide students with comprehensive elderly care skills training. Since 2015, Hubei Polytechnic Institute has collaborated with Taikang Elderly Care Institution of Wuhan to jointly develop specialized training programs, including the Elderly Care Practical Skills Enhancement Project, Long-term Care Support Program, and Elderly Psychological Care Project. These programs have already trained over 1,000 elderly care program students with professional skills.

This resource layout has promoted students' employability development and elderly care service quality improvement in Hubei Province's elderly care industry, offering valuable insights for other regions in the elderly care area to investigate, and laying a solid foundation for China's long-term development in addressing population ageing.

2.2 Parent Disciplines

2.2.1 Ecological Systems Theory

This study applies ecological systems theory to analyze the impact of family expectations, financial support, informational support, values and beliefs on the employability of students in elderly care management.

Developed by psychologist Urie Bronfenbrenner, ecological systems theory explains how human development is influenced by different types of environmental systems. The theory implies the dynamic interactions between individuals and their environments, which are organised into nested levels (Iruka et al., 2020). This theory underscoreed the importance of designing environments-whether family, educational, or community-based-that actively support individual development while addressing broader societal challenges (Crawford, 2020). Bronfenbrenner highlighted that human development is shaped through the dynamic interaction of various environmental systems, with the family environment and personal social behaviour playing a crucial role (Burakgazi, 2025). For proximal processes, meaningful family interactions, like parent-child conversations, and social connections, such as family relationships, are critical for emotional growth and social skill development (Wang et al., 2020). For the time dimension, long-term engagement in supportive family environments and consistent participation in social contexts fosters resilience, strengthens identity, and enhances personal growth (Vessaz et al., 2022).

Ecological systems theory posited that an individual's social environment (such as family environment, institutions, groups, community, etc.) should be viewed as a social ecosystem, emphasizing that everyone's social environment should be considered as a whole ecological system (Olson et al., 2023). Bronfenbrenner's ecological systems theory identified four interrelated environmental systems as shown in Figure 2.4: the microsystem, encompassing direct interactions with family, peers, and schools; the mesosystem, which involved the relationships between microsystems, such as the connection between home and school; the exosystem, representing external influences like local community policies; and the macrosystem, the overarching cultural, economic, and societal frameworks shaping all other levels. These systems, ranging from direct, proximal interactions to broad, distal influences, are often visualized as nested concentric circles around the individual, resembling a set of Russian dolls (Ettekal & Mahoney, 2017).

The theory emphasiseed the role of family environment as a key factor in the development of an individual's social behaviour. Especially in the context of accelerated global ageing (macrosystem), the direct influence of family environment (mesosystem) on individual behaviour (microsystem) has become increasingly evident. This is because the global ageing trend has driven the rapid development of the elderly care industry, resulting in a sharp increase in demand for elderly care-related positions. In this context, family members, as direct stakeholders in the elderly care industry, play a significant role. The family environment not only shapes an individual's perception of the industry but also directly affects their career choices and employment readiness. When family members support and encourage an individual to enter the elderly care field, it helps them recognize job opportunities and career prospects in this area earlier, thereby enhancing their employability.

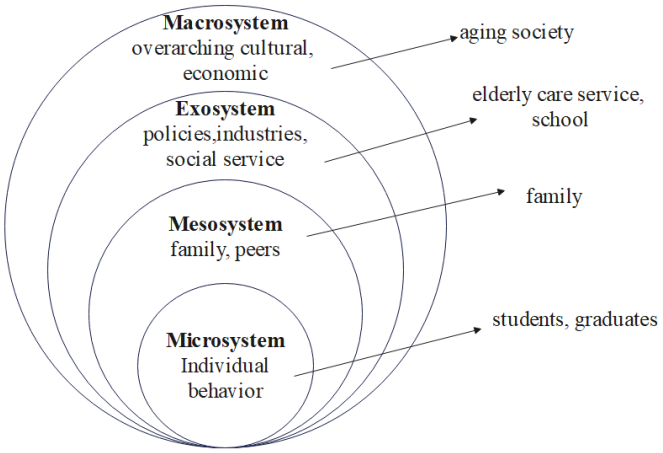

Figure 2.4 Ecological Systems Theory Model of Human Development
Source: Ecological Systems Theory (Ettekal & Mahoney, 2017).

According to the ecological systems theory, family is the immediate element in individual life (Manyani et al., 2024). Bronfenbrenner considers the family system as the earliest, most enduring, and influential social ecosystem for an individual (Dunst & Carl, 2022). So in the context of global aging tendency (Macrosystem), family environment (Mesosystem) can be the direct influence factors on individual behavior (Microsystem). Past studies analyzed family influence on individual behavior through four major areas: family expectations, financial support, informational support, and values and beliefs (Vautero et al., 2021). For students majoring in elderly care management, the family environment, as a key component of their social ecological system, plays a crucial role in shaping their individual behavior. Therefore, family expectations, financial support, informational support, values and beliefs from the family environment of elderly care majored students will influence their personal behavior. Existing research showed that employability is a form of positive adaptive behaviour, which includes behavioural traits such as adaptability and proactivity (Zhao et al., 2022). The employability of students majoring in elderly care management is reflected in their personal behaviour and coping abilities in areas such as medication management, emotional care for the elderly, and communication and collaboration in elderly care daily work. Ratnaningsih and Sawitri (2020) suggested that family influence enhances university students' employability by shaping their career-related behaviors, with family expectations playing a crucial role in career planning and exploration. Johnson and Ridgeway (2023) emphasized that financial support from family enables graduates to transition more smoothly from school to the

workforce. In contrast, the absence of such support can result in prolonged unemployment or dependence on informal work, ultimately impeding employability. Inavatin et al. (2020) emphasized that family support may serve as a reservoir of psychological resources and information, facilitating individuals' decision-making processes related to their careers, thereby improving their employability. Furthermore, Ratnaningsih and Sawitri (2020) highlighted the critical role of family values and beliefs in influencing career planning, exploration, and employability outcomes. In this context, ecological systems theory provides a theoretical foundation for the relationship between the independent variables (family expectations, financial support, informational support, and family values and beliefs) and the dependent variable (employability) in the empirical model of this study. As shown in Figure 2.5.

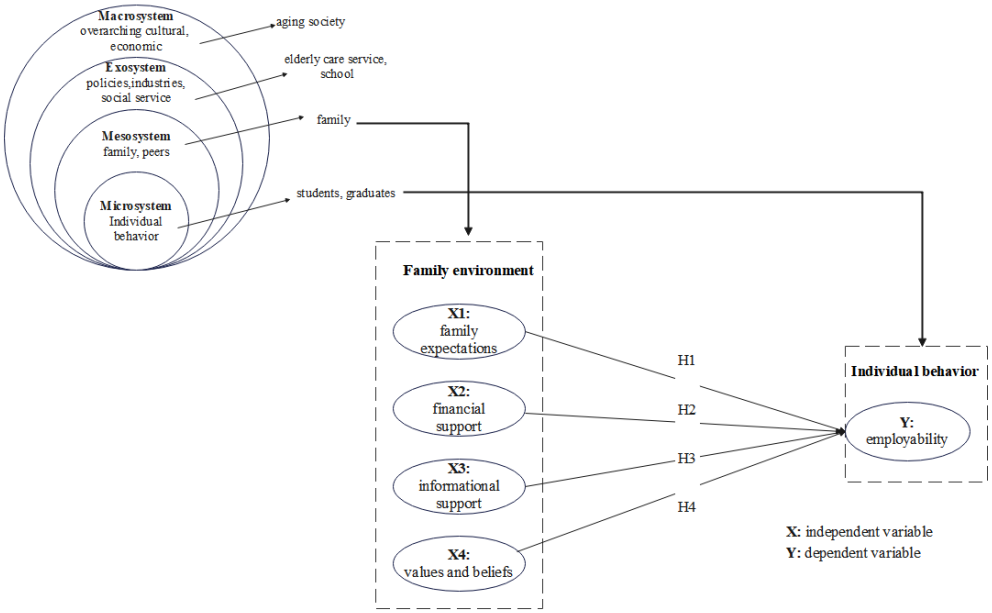

Figure 2.5 Empirical Model Based on the Ecological Systems Theory

2.2.2 Identity Control Theory

Identity control theory is used to determine whether family expectations, financial support, informational support, values and beliefs can impact the employability of students in elderly care management through occupational identity (Sheppard et al., 2020).

Identity control theory, developed by Peter J. Burke, is a key component of identity theory as conceptualized by Stryker (1980) and later refined by Burke and Stets (2022). Identity control theory focuses on the nature of person's identities (who they are) and the relationship between the person's identities and their behavior within the context of the

social structure within which the identities are embedded. The basic identity model is shown in Figure 2.6.

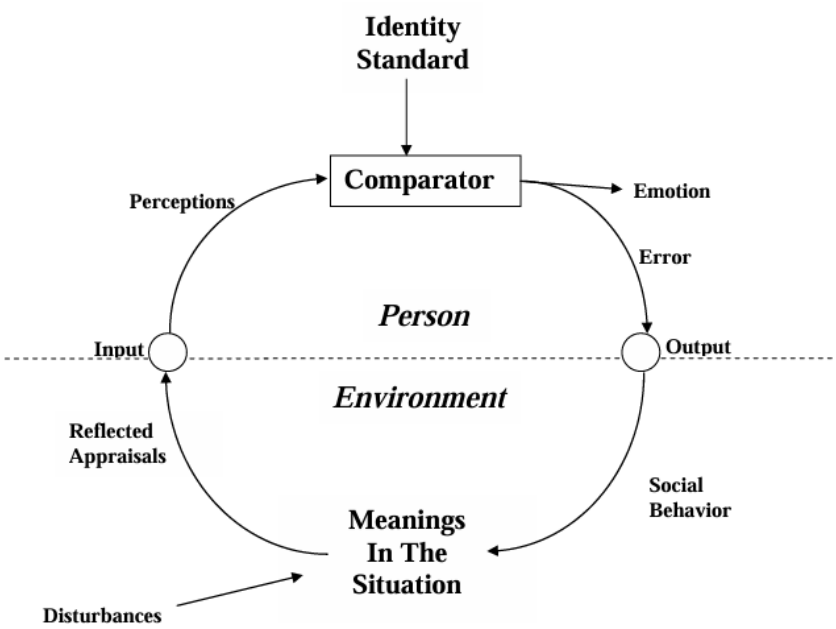

Figure 2.6 Basic Identity Theory Model

Source: Stets and Burke (2005).

Identity control theory implies that an individual's identity is defined by roles and social norms provided by the social environment (such as family, workplace, and other social structures), and that individuals confirm these identities through ongoing behavioral adjustments and interactions (Stets & Burke, 2024). Occupational identity is a specific part of an individual's identity, focusing on their professional or career role (Walder et al., 2022). The output of occupational identity is usually related to career behaviors such as employability (Lin & Chen, 2021).

Identity control theory implies that social environment, as an external factor, provides the framework for an individual's identity standards. The external environment factor can be internalized as the individual's identity standards, then comes with a set of socially recognised behaviour output, then individual perceives and evaluates feedback from the environment, which formulates into their internal identity standards. If the individual's behavior in the social environment aligns with these standards, the identity is validated. If there is a discrepancy, the individual adjusts their behavior to reduce the difference.

Existing research has shown that the family environment mainly influences an individual's career choices through four aspects: family expectations, financial support, informational support, values and beliefs (Tasković & Pedović, 2024). A related study by Zhang et al. (2023) examined the mediating role of occupational identity in the relationship between family environment and personal career choices. Drawing on identity control theory, Sun et al. (2020) provided evidence that family expectations shape adolescents' self-identity, which, in turn, extends to their occupational identity and influences their career paths. Their study has emphasized that family expectations enhance adolescents' cognitive competence and self-identity, thereby indirectly fostering career-related confidence and preparedness. A recent study by Woodman et al. (2024) highlighted that financial contributions from family help alleviate economic hardship, thereby supporting identity formation and career development. This financial security allows students to focus on career-relevant goals, fostering a stronger occupational identity and positioning them for success in the job market. Sheppard et al. (2020) applied the identity control theory model to examine self-regulatory responses in young people following occupational identity feedback. They have found that informational support from the family environment helps young people better understand occupational requirements and align them with personal abilities, thereby enhancing occupational identity and employability. Dieleman and Koning (2020) found that family values and beliefs-including religious, cultural, and sustainability values-dynamically shape the occupational identities of family members. This internalization of values and beliefs not only strengthens family members' occupational identity but also fosters their resilience and commitment to career paths, ultimately promoting career development and employability.

For students majoring in elderly care, family environment foster their occupational identity, and students will cultivate their career behaviour according to this kind of occupational identity. According to identity control theory, students' sense of professional identity in the elderly care industry drives them to enhance their employability in this field. Moll-Jongerius et al. (2023) examined how the formation of professional identity influences medical students' perceptions and behaviors toward caring for older adults. They have highlighted that building relationships with older individuals and reflecting on their expectations significantly impacts students' professional identity development, shaping their adaptability and alignment with occupational roles.

Therefore, taking reference to the pathway in identity control theory, where environment factors (family expectations, financial support, informational support, and values and beliefs) influence social behaviour (employability) through the identity standard (occupational identity), which provides support for the mediating effect of occupational identity in the empirical model of this study, bridging the independent variables (family expectations, financial support, informational support, values and beliefs) and the dependent variable (employability). Empirical models based on identity control theory are shown in Figure 2.7.

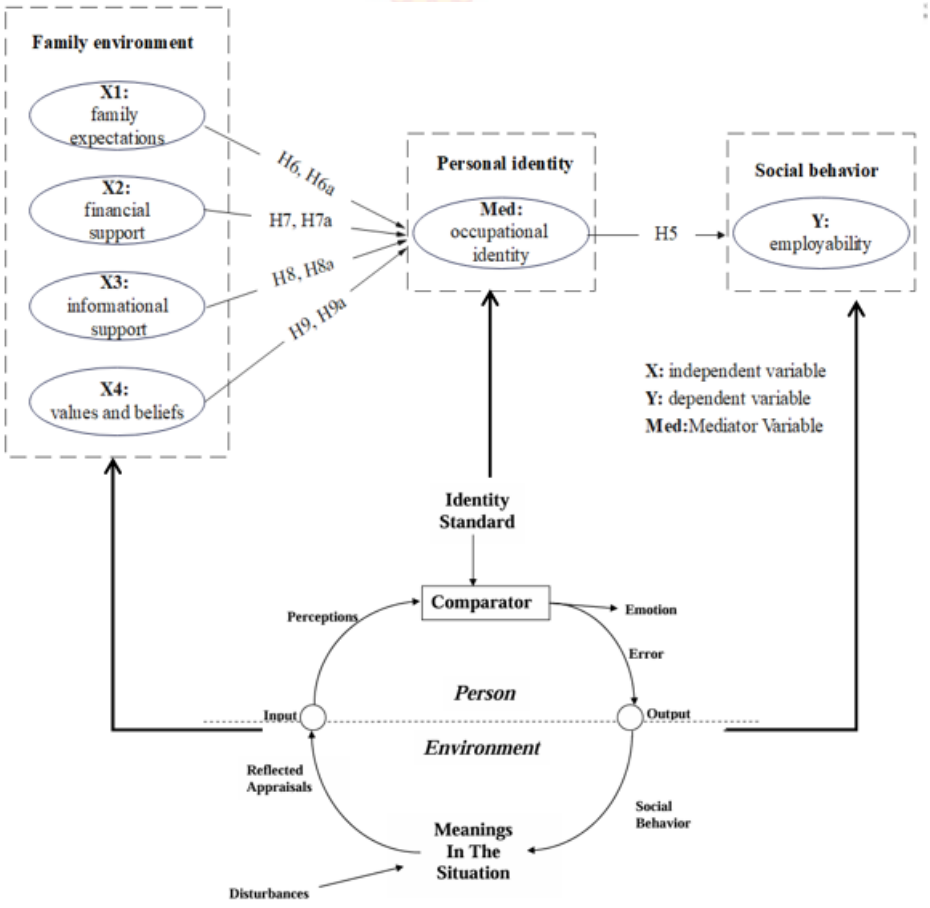

Figure 2.7 Empirical model based on identity control theory

2.3 Immediate Disciplines

The influence of the family environment on students' employability is mainly reflected in family expectations, financial support, informational support, and values and beliefs (Tasković & Pedović, 2024). According to the ecological systems theory, the family environment not only influences students' social roles and behaviors but also plays

a crucial role in shaping their career development, which is closely tied to their employability (Monteiro et al., 2020). Identity control theory reveals that the family environment, through the social support and role expectations it provides, significantly influences students' occupational identity, which in turn mediates the direct impact on their employability (Huang et al., 2022). To better apply these theories to the context of this study and to gain a deeper understanding of the relationships between variables in the context of higher education students in elderly care management, this section provides a detailed explanation and analysis (Lawless et al., 2024).

2.3.1 Family Expectations of Higher Education Students Majoring in Elderly Care Management

Family expectations refer to the expectations or demands that families place on students in terms of academic and career choices (Vautero et al., 2021). These expectations can manifest as parents' planning for the student's future career, offering guidance on development paths, or even encouraging specific fields or industries (Gao, 2023). This external pressure or support often becomes an important influencing factor in the student's career decision-making process (Kong et al., 2019). For higher education students majoring in elderly care management, family expectations are closely related to their employability. Clear family expectations can help students set clear career goals and directions, guiding them to develop relevant skills more purposefully and accumulate internship and work experience (Wang et al., 2023). In this way, students not only improve their professional competitiveness but also better adapt to the future demands of the job market (Swan & Eggenberger, 2021). Despite the relatively less optimistic development prospects of the elderly care industry, many family members of students majoring in elderly care management still hold positive expectations for this field. This is because the elderly care industry is closely linked to the future quality of life of elderly relatives within their families, particularly those who are approaching an aging phase of life (Havreng-Théry et al., 2024).

2.3.2 Financial Support of Higher Education Students Majoring in Elderly Care Management

Financial support refers to the economic assistance provided by families for students' academic and career development (Zhang et al., 2020). This support can manifest as direct financial help, such as tuition fees, costs for study materials, and internship

expenses, or providing students with better educational resources and living conditions (Pashaei et al., 2023). Financial support plays an essential role in students' academic and career planning, especially during higher education, where students require more resources to gain professional knowledge and internship experience. The family's economic support is crucial in this context (Collins et al., 2022). In the field of elderly care management, students need to master specialized knowledge and skills related to elderly care and accumulate practical work experience. Financial support of family not only helps students successfully complete their studies but also provides them with opportunities to participate in high-quality internship programs, gaining more industry experience (Liu et al., 2023). These valuable insights and practical experiences enhance the professional competence of students, injecting new vitality and specialized skills into the sustainable development of the elderly care industry (Algoso et al., 2024). Through these practices, students are better equipped to meet the demands of the elderly care sector, thereby improving their employability and career prospects (Chidebe et al., 2023). Overall, family financial support not only provides students with academic security but also supports them in gaining a broader range of learning and practical opportunities, ultimately enhancing their employability (Chen et al., 2024). For students in elderly care management, financial support plays a crucial role in helping them accumulate nursing knowledge, improve professional skills, and gain practical experience in the industry, further advancing their career capabilities (He et al., 2024).

2.3.3 Information Support of Higher Education Students Majoring in Elderly Care Management

Information support refers to the form of assistance where family members help students make informed decisions in their academic and career choices by sharing knowledge, providing guidance, and conveying information (Koçak et al., 2021). This support includes parents or other family members offering useful information about career development, industry trends, or academic options (Alnajjar & Hashish, 2024). Information support not only helps students acquire necessary knowledge but also enhances their ability to make career decisions and boosts their confidence in their future careers, especially when facing uncertainty in career choices (Samson et al., 2024). For higher education students majoring in elderly care management, the informational support, provided by family members plays a significant role in their employability. Family

members may assist students in gathering employment information about the elderly care industry, such as the current recruitment demands, types of employers (e.g., hospitals, nursing homes, community care services), job vacancies, and salary levels. This information helps students better understand the supply-demand relationship and competitiveness in the job market, allowing them to make reasonable career plans (Yi et al., 2022). The elderly care industry often has specific certification or training requirements, and family informational support, can help students understand the necessary certificates, qualification exams, and continuing education opportunities. This enables students to focus on improving their professional skills during their studies to meet market requirements (Chidebe et al., 2023). In summary, informational support, helps students majoring in elderly care management find a suitable direction in their career planning by providing accurate industry knowledge and career guidance. This support not only enhances students' confidence and decision-making abilities but also helps them better cope with the challenges of the job market, thus further improving their employability in the elderly care industry (MacDougall Ms, 2023).

2.3.4 Values and Beliefs of Higher Education Students Majoring in Elderly Care Management

Values and beliefs refer to the cultural and belief systems transmitted across generations within a family, which profoundly influence family members' career expectations and life choices (Hu et al., 2023). Family values and beliefs not only shape an individual’s moral and life views but also guide them to prioritize careers that are closely tied to personal or social responsibility (Khwarizmi & Khwarazmita, 2022). This value system often reflects a family’s respect and recognition for certain industries or professions, which in turn influences the career development paths of students (Cheisviyanny et al., 2022). In the field of elderly care management, the family values and beliefs of students significantly impact their employability. Students from families with a strong sense of social responsibility and service orientation are more inclined to choose careers that contribute positively to society, such as the elderly care industry (Rofcanin et al., 2020). These families encourage their children to select careers that benefit society, recognizing the intrinsic value of such professions. This support not only enhances students' identification with the elderly care industry but also fosters a sense of responsibility and dedication to serving society, thereby improving their employability in

the field (Dina & Putra, 2022). In conclusion, family values and beliefs not only influence students' career choices but also shape their moral views and sense of responsibility, enhancing their employability in the elderly care field. Students who grow up in families with a strong spirit of service and social responsibility often find a sense of belonging in the elderly care industry and contribute to its growth and development through their efforts (Bennett et al., 2020).

2.3.5 Occupational Identity of Higher Education Students Majoring in Elderly Care Management

Occupational identity refers to an individual's recognition and acknowledgment of the value, meaning, and social contribution of their profession. This sense of identity not only enhances work motivation but also maintains stability and longevity in their career (Huang & Espeso, 2024). The stronger an individual's occupational identity, the higher their level of commitment and persistence in that profession (Houle et al., 2022).

For higher education students majoring in elderly care management, a strong occupational identity not only enhances their learning motivation and professional skills but also improves their adaptability and boosts their sense of career achievement. This ultimately enhances their employability in the field (Helens-Hart, 2019): 1) Students with strong occupational identity are more inclined to fully engage in their studies and practice. Their recognition of the elderly care industry motivates them to continuously learn and improve their professional knowledge and skills. This occupational identity encourages students to focus on accumulating the necessary knowledge and experience for the industry, including theoretical learning, internships, and practical skills, thereby enhancing their professional competence and competitiveness (Park et al., 2021). 2) When students identify with their profession, they show greater adaptability and perseverance when facing challenges and difficulties. The elderly care management field requires a high level of responsibility, patience, and professionalism, and strong occupational identity enhances students' resilience in handling pressure and challenges, which improves their performance in the workplace (Elliott et al., 2023). 3) Occupational identity increases students' sense of career achievement. Students who identify with the elderly care industry are more likely to find personal value in their profession and maintain long-term passion for their work. This sustained passion helps them progress in their career, thus enhancing their employability (Chidebe et al., 2023).

2.4 Research Hypotheses and Empirical Model

2.4.1 Research Hypotheses

2.4.1.1 Family Expectations and Employability of the Higher Education Students Majoring in Elderly Care Management

Family expectations not only provide students with direction for future career development but also, to some extent, motivate them to invest more effort in cultivating academic and professional skills (Koçak et al., 2021). Family's positive outlook on the future of the elderly care industry not only enhances students' recognition of the field but also, to some extent, motivates them to work harder in their academic and career development (Perkins et al., 2021). The positive attitudes and expectations from family members provide a strong driving force for students, encouraging them to actively improve their professional skills and enhance their employability in the elderly care industry (Rofcanin et al., 2020). Thus, family expectations not only provide clear direction for students' career development but also enhance their employability in the elderly care sector through a combination of emotional support and responsibility (Kim & Yoon, 2022).

There is a research gap between values and beliefs and employability, and only a few relevant empirical studies exist. Several recent studies have highlighted how family expectations influence employability. Ingram (2023) surveyed 100 family medicine residents to assess their preparedness for geriatric care. The study showed that expectations from family and community during training enhanced residents' professional readiness in the field of elderly care, indicating that family expectations for work in elderly care have a significant impact on the employability of medical students. Baughman et al. (2019) employed a mixed-methods approach to evaluate the impact of films and educational programs on medical students. Through evaluations from 403 students, the study has found that exposure to family care-giving expectations increased students' understanding of the caregiver role and enhanced their communication skills with caregivers. This increased awareness positively impacted students' preparedness for employment in the field of elderly care. Kim and Yoon (2022) conducted a longitudinal study of 3,607 older adults in South Korea and used a fixed-effects regression model to analyze the impact of family expectations. The results showed that expectations of future care from family members significantly increased the life satisfaction of the elderly, which, in turn, had a meaningful

impact on students' career choices in the field of elderly care and enhance their employability.

Given the family member importance placed on care giving, particularly in elderly care management, this study hypothesizes that:

H1: Family expectations will positively influence the employability of higher education students majoring in elderly care management.

2.4.1.2 Financial Support and Employability of the Higher Education Students Majoring in Elderly Care Management

Financial support has a direct and profound impact on the employability of students majoring in elderly care management. Firstly, students from families with better economic conditions are able to access more educational resources, including the choice of high-quality schools, participation in a variety of extracurricular activities, and obtaining practical opportunities. These resources help students improve their academic performance and overall skills, thereby enhancing their competitiveness in the job market (Chen et al., 2024).

Recent studies have suggested that financial support has a profound influence on the employability of students in caregiving sectors. For instance, Liang et al. (2023) conducted a questionnaire survey with 100 Chinese elderly care service interns and supplemented it with interviews of 15 interns. Using qualitative comparative analysis (QCA), they have found that family financial support and internship wages play a crucial role in interns' job retention. Even under high workload conditions, students are more likely to complete their internships if they have family financial support. Fletcher and Alligood (2022) used cross-case variable analysis to investigate the impact of parental financial support on students' academic outcomes through semi-structured interviews with 49 American college students. The study revealed that financial support not only enhanced students' employability but also strengthened family relationships and influenced students' future career planning to some extent. Agarwala et al. (2022) investigated the impact of financial support on female entrepreneurship and employability through a detailed analysis of the MUDRA loan scheme. The study, based on data collected from women entrepreneurs, highlighted that access to financial support significantly improved both their entrepreneurial ventures and employability outcomes. The research revealed that financial aid not only enhanced business growth but also increased the confidence and

skillset of women, which positively influenced their employability and overall empowerment. Fossey et al. (2002) conducted interviews and analyzed data from up to 60 young carers among Australian college students. Using thematic analysis, they revealed the relationship between caregiving responsibilities, academic performance, and employability. Results indicated that family financial support and flexible education policies can help students with care-giving responsibilities improve their employability and reduce academic pressure.

Considering the significant role financial support plays in influencing employability, this study hypothesizes that:

H2: Financial support will positively influence the employability of higher education students majoring in elderly care management.

2.4.1.3 Informational Support and Employability of the Higher Education Students Majoring in Elderly Care Management

Information support not only enhances students' confidence in the elderly care industry but also helps them make more rational and personalized career choices (Bifarin et al., 2022). When family members provide realistic information about industry trends and potential growth, students gain a clearer understanding of their career prospects within the field, allowing them to make more informed decisions and avoid making wrong choices (Liang et al., 2023). Additionally, as the elderly care industry is often perceived with varying levels of evaluation, objective information and guidance from family members can reinforce students' commitment to the field, thereby boosting their employability and competitiveness (Chidebe et al., 2023).

Recent studies have emphasized the importance of informational support in improving the employability of students in caregiving professions. For example, a study by Kang et al. (2024), using data from 1,747 Chinese students, found that parental involvement significantly boosted students' academic self-efficacy and performance. The findings suggested that informational support from family members contributed to academic development and, in turn, enhanced long-term employability potential. Bifarin et al. (2022) conducted semi-structured interviews with 19 Chinese students studying in the United Kingdom and applied reflective thematic analysis. Their findings revealed that the cultural value of 'Xiao' (filial piety) plays a significant role in family informational support. With informational support from their families, students were able to better plan

their future career paths, showing a higher willingness to work in the field of elderly care. Day (2021) conducted an empirical case study to examine the educational experiences of young adult carers aged 18 to 25 who support family members with disabilities or chronic illnesses while attending university. Using the "Young Adult Carers at University-Student Experience Framework" model, the study analyzed young adult carers' patterns of engagement in academic activities and overall success in higher education. The findings revealed that family informational support played a crucial role in helping these students manage the conflicts between academic challenges and caregiving responsibilities, ultimately enhancing their adaptability and employability in their field.

Given the significant impact of informational support on the development of career-relevant skills, this study hypothesizes that:

H3: Informational support will positively influence the employability of higher education students majoring in elderly care management.

2.4.1.4 Values & Beliefs and Employability of the Higher Education Students Majoring in Elderly Care Management

Families with deep cultural backgrounds often emphasize nurturing their children’s sensitivity to social issues and concern for vulnerable groups in society. This enables students entering the elderly care industry to possess a stronger sense of social responsibility and mission (Bifarin et al., 2022). Not only are they able to understand the core values of the industry, but they also actively practice these values, demonstrating a stronger occupational identity and competence in their work. This internal drive, stemming from family values, encourages students to exhibit greater adaptability and competitiveness in the elderly care sector (Bennett et al., 2020).

Several studies have underscored the importance of values and beliefs in shaping the employability of healthcare students. However, there is a research gap between values and beliefs and employability, and only a few relevant empirical studies exist, some of which are from 2018, which are relatively old. Ozaydin et al. (2023) conducted a descriptive-relational study with 168 fourth-year nursing students in Turkey to examine how intergenerational normative solidarity and compassion influence attitudes of ageism. Using the ageism attitude scale, the intergenerational normative solidarity scale, and the compassion scale, the researchers have applied multiple regression as well as mediation and moderation analyses. Results showed that stronger intergenerational ties and higher

levels of compassion, particularly empathy and humanitarianism, were associated with lower levels of ageism among students. Kanios (2021) conducted a survey in Poland with 1,084 middle and high school students, using diagnostic questionnaires to assess their beliefs about the social roles of older people. The study recommended that educators incorporate family value education into curricula to improve students' career readiness and employment intentions in elderly care. Sunde et al. (2021) conducted a qualitative study in Norway involving 18 health and social care professionals, using focus group interviews to investigate their understanding of responsibilities in collaborating with family caregivers of older adults with mental health problems. The study has found that professionals' personal values regarding family caregiving influenced how they perceived their roles, highlighting both the recognition of caregivers as important resources and the challenges of navigating unclear boundaries of responsibility. Given the crucial role of values and beliefs in shaping career aspirations and employability, this study hypothesizes that:

H4: Values and beliefs will positively influence the employability of higher education students majoring in elderly care management.

2.4.1.5 Occupational Identity and Employability of the Higher Education Students Majoring in Elderly Care Management

Occupational identity refers to how individuals perceive themselves in relation to their professional roles. For students in elderly care management, developing a strong occupational identity is crucial in fostering their commitment to this demanding field and enhancing their employability. A strong sense of occupational identity motivates students to actively engage in their career development and take ownership of their professional growth, which is directly linked to employability. The occupational identity of higher education students majoring in elderly care management refers to their recognition and understanding of the value, significance, and social contribution of their chosen profession and the elderly care industry. This occupational identity is reflected in their sense of responsibility toward the elderly care sector, their pride in the profession, and their expectations for career development (Jarling et al., 2020). For the higher education students, occupational identity is not only about understanding their future professional role but also about forming an emotional and responsible connection with their profession. Students with strong occupational identity are more likely to comprehend

the importance of the elderly care industry in society and actively engage in their studies (Walder et al., 2022). They are more willing to face the challenges of the profession and continuously improve their professional skills to provide high-quality elderly care services in the future (Chidebe et al., 2023).

Recent studies have emphasized the importance of occupational identity in shaping career success. Moll-Jongerius et al. (2023) noted that developing an occupational identity in the context of elderly care involves cultivating values such as compassion, collaboration, and holistic care, which are critical for employability in the healthcare sector. Similarly, Vicente et al. (2022) highlighted that psychological factors, including self-efficacy and professional commitment, play a crucial role in strengthening occupational identity among students, thereby positively impacting their employability. Moreover, Howes and Ellison (2022) pointed out that social support and a strong occupational identity contribute to students' career success, particularly in caregiving professions, where empathy and patient-centered care are highly valued. Bertossi (2023) found that values such as humanization and inclusion are key elements shaping occupational identity and contributing to employability in caregiving sectors like elderly care. Shikata et al. (2021) investigated the psychometric properties of an occupational identity questionnaire designed for elderly individuals in need of care and emphasized the importance of a strong occupational identity in promoting better care and aligning with professional roles, which is critical for employability in elderly care. Considering the vital role of occupational identity in influencing employability, this study hypothesizes that:

H5: Occupational identity will positively influence the employability of higher education students majoring in elderly care management.

2.4.1.6 The Mediating Role of Occupational Identity of the Higher Education Students Majoring in Elderly Care Management

1) The Influence of Occupational Identity between Family Expectations and Employability of the Higher Education Students Majoring in Elderly Care Management

Family expectations are positively related to occupational identity, and the clearer and more supportive the family expectations, the stronger a student’s occupational identity becomes (Hartung et al., 2022). For instance, when families have high expectations for their children to succeed in elderly care management, students are more

likely to develop a strong occupational identity that aligns with these expectations (Shikata et al., 2021). High expectations boost occupational identity because they provide a sense of direction, motivation, and validation from the family, making students internalize their professional roles more deeply (Kossek et al., 2021). Additionally, strong family support encourages students to take responsibility and strive toward meeting these expectations, which further strengthens their occupational identity (Niesyty, 2020). This identity helps them view the field as valuable and meaningful. As an example, Liang et al. (2023) found that students majoring in elderly care management often struggle with the societal undervaluation of the profession. In such situations, family expectations provide emotional and motivational support, reinforcing their occupational identity by encouraging them to view their future roles as essential to society. A strong occupational identity enables students to develop resilience and persistence, which, according to Wang and Yang (2022), enhances their employability by motivating them to pursue career-specific skills, gain experience, and tackle challenges with confidence. Students with strong family expectations are more likely to develop a solid occupational identity, which in turn motivates them to pursue career opportunities and professional development that enhance their employability (Hartung et al., 2022).

Clarke and Ravenswood (2019) conducted 32 in-depth interviews and demonstrated that students majoring in elderly care management often construct their career identity based on family expectations and the demands of the profession. Their study has highlighted how students strive to develop a positive occupational identity to counteract societal bias associated with the field of elderly care, thereby enhancing their employability. Zhang et al. (2023) collected data from 395 publicly funded students and employed a moderated mediation model to examine how family expectations influence students' occupational identity. The study revealed that psychological capital mediates the relationship between family expectations and occupational identity, which, in turn, significantly enhances the employability of students in elderly care management. Woodhall and Shaw (2024) conducted semi-structured interviews with five participants and applied interpretative phenomenological analysis to investigate how family members' expectations influence the occupational experiences of relatives with dementia in long-term care. They have found that family members, by expecting for better care, significantly

shape the occupational identity of elderly care workers, which in turn enhances their employability. Thus, the following hypotheses are proposed:

H6: Family expectations will positively influence the occupational identity of higher education students majoring in elderly care management.

H6a: Occupational identity will mediate the relationship between family expectations and employability of higher education students majoring in elderly care management.

2) The Influence of Occupational Identity between Financial Support and Employability of the Higher Education Students Majoring in Elderly Care Management

Financial support is positively associated with occupational identity, as students with greater financial support are more likely to develop a stronger sense of identity in their chosen profession (Li et al., 2025). When families provide financial resources, it allows students to fully immerse themselves in their studies and professional development without the stress of financial constraints. For example, Liang et al. (2023) observed that students majoring in elderly care management who receive substantial financial support are better positioned to participate in internships, attend industry-related workshops, and engage in other practical experiences. These opportunities not only enhance their practical skills but also strengthen their occupational identity by enabling them to witness the real-world impact of their work in elderly care. An occupational identity strengthened through substantial financial support can further reinforce students' motivation and commitment to the field (Mu et al., 2022). Financial support provides a sense of stability, allows students to fully focus on their academic and career development, and perceives their chosen career path as viable and worthy of emotional and professional investment (Fu & Xu, 2022). This reduces stress related to financial insecurity, enabling students to engage more actively in their education and career-building activities (Wu et al., 2023). As students grow more confident in their career trajectory, their enhanced occupational identity increases their employability by motivating them to seek out internships, networking opportunities, and professional development that align with their long-term goals (Long et al., 2024). Students with a strong occupational identity are more driven to seek professional opportunities that align with their values and skills, enhancing their career prospects. Therefore, financial support not only eases the economic burden but

also nurtures a strong occupational identity, which positively influences the employability of students in elderly care management (Han & Zhou, 2023).

Shamsikhani et al. (2021) conducted semi-structured interviews with 21 elderly parents and 4 family members in Iran to analyze the impact of family financial support on home care. Their findings revealed that financial backing from family members significantly enhanced caregivers' occupational identity and their ability to meet occupational demands, which, in turn, improved their employability in elderly care management. Kim (2023) analyzed data from the American Time Use Survey to examine the impact of employer-provided paid leave on eldercare provision. This quantitative study showed that workers with family financial support were more likely to engage in caregiving roles, which enhanced their occupational identity in eldercare, improving their long-term employability in the field. The following hypotheses based on these insights::

H7: Financial support will positively influence the occupational identity of higher education students majoring in elderly care management.

H7a: Occupational identity will mediate the relationship between financial support and employability of higher education students majoring in elderly care management.

3) The Influence of Occupational Identity between Informational Support and Employability of the Higher Education Students Majoring in Elderly Care Management

Informational support is positively linked to occupational identity, as students who receive relevant and timely information from their families are more likely to develop a strong sense of identification with their profession (Zhu et al., 2024). Informational support, such as guidance on industry trends, career pathways, and professional opportunities, provides students with a clearer understanding of the field and helps shape their perception of its significance. For instance, students majoring in elderly care management who receive informative guidance from their families are more equipped to recognize the growing demand and social importance of elderly care services, which fosters a deeper occupational identity (Poonprapai & Lerkiatbundit, 2021). This enhanced occupational identity, in turn, positively impacts employability. When students feel informed and confident about their professional path, they are more likely to develop a strong commitment to their field and seek out relevant opportunities to enhance their skills.

Selvakumar and Poongodi (2024) suggested that access to accurate and relevant career information enables students to make informed decisions, pursue internships, and participate in professional development activities aligned with their career goals. A strong occupational identity driven by informational support motivates students to take proactive steps in building their employability by gaining practical experience, networking within the industry, and honing the specific skills needed in elderly care management. Thus, informational support not only shapes students' understanding of their chosen profession but also strengthens their occupational identity, which plays a crucial role in boosting their employability in the elderly care management sector (Huang et al., 2022).

Liang et al. (2023) gathered data from 100 vocational students majoring in elderly care services and 15 interns using questionnaires and interviews. The study used qualitative comparative analysis (QCA) to examine the factors affecting retention rates during internships. They have found that informational support from families, along with psychological capital, influenced the students' occupational identity and employability in the elderly care field. Chidebe et al. (2023) conducted semi-structured interviews with 9 administrators, 6 faculty members, and 10 employers to examine the skills valued in elderly care professionals. Their study has highlighted the importance of communication and problem-solving skills, supported by information and guidance, in shaping occupational identity, which in turn enhances the employability of community college students in elderly care fields. Shikata et al. (2021) conducted a study with 135 elderly participants to assess the psychometric properties of the Occupational Identity Questionnaire (Provisional version). They have demonstrated that informational support, significantly affects the development of occupational identity, which plays a critical role in enhancing the employability of elderly care workers. Thus, the following hypotheses are proposed:

H8: Informational support will positively influence the occupational identity of higher education students majoring in elderly care management.

H8a: Occupational identity will mediate the relationship between informational support and employability of higher education students majoring in elderly care management.

4) The Influence of Occupational Identity between Values and Beliefs and Employability of the Higher Education Students Majoring in Elderly Care Management

Empirical studies have shown that family values and beliefs play a crucial role in strengthening the occupational identity of students in elderly care management. For instance, Olike et al. (2020) demonstrated that students from families emphasizing caregiving, compassion, and social responsibility tend to develop a more robust occupational identity, viewing elderly care not merely as a job but as a calling. This alignment between family values and occupational identity fosters a strong sense of purpose, which motivates students to engage more deeply with their career training and development. Tyumaseva and Orekhova (2019) found that students from families that highly value community well-being are more likely to pursue internships and professional development opportunities aligned with these beliefs. This not only strengthens their occupational identity but also increases their adaptability in the workplace. Values and beliefs of families provide students majoring in elderly care management with the motivation and emotional resilience to enhance their occupational identity within the elderly care industry. These qualities make them more determined to continuously improve their competitiveness in the workplace, thereby equipping them with employability skills that match the demands of the elderly care industry. Bakirhan (2023) found that students with a strong occupational identity are better equipped to handle emotional and ethical challenges in elderly care work, demonstrating higher levels of professional loyalty and stability. This, in turn, enables them to exhibit strong employability in complex work environments.

Lim et al. (2024) conducted semi-structured interviews with 16 family caregiver and care recipient dyads in Singapore. They have employed reflexive thematic analysis to demonstrate how family values shaped the caregiving roles of elderly care workers. The study revealed that cultural beliefs within family-centric societies play a significant role in shaping the occupational identity of caregivers, which subsequently influences their employability in elderly care management. Walder et al. (2022) reviewed 23 studies on occupational identity formation in medical students. Their findings revealed that values such as compassion, rooted in family beliefs, play a key role in shaping the occupational identity of students in elderly care. This occupational identity directly

impacted their employability by improving their ability to engage in holistic and patient-centered care. Lun (2022) conducted semi-structured interviews with 10 college students to examine how their experiences providing care for aging family members influenced their emotional well-being and career trajectories. Lun has found that students' family beliefs regarding caregiving positively influenced their occupational identity, reinforcing their willingness to continue in caregiving roles, which enhanced their employability in elderly care sectors. Thus, the following hypotheses are proposed:

H9: Values and beliefs will positively influence the occupational identity of higher education students majoring in elderly care management.

H9a: Occupational identity will mediate the relationship between values and beliefs and employability of higher education students majoring in elderly care management.

Summary of Hypotheses

After the above discussion, this study proposes relevant research hypotheses. The summary is shown in Table 2.8

Table 2.8 Summary of Hypotheses Proposed by This Study

Hypothesis	Research hypotheses
H1	Family expectations will positively influence the employability of higher education students majoring in elderly care management.
H2	Financial support will positively influence the employability of higher education students majoring in elderly care management.
H3	Informational support will positively influence the employability of higher education students majoring in elderly care management.
H4	Values and beliefs will positively influence the employability of higher education students majoring in elderly care management.
H5	Occupational identity will positively influence the employability of higher education students majoring in elderly care management.
H6	Family expectations will positively influence the occupational identity of higher education students majoring in elderly care management.

Table 2.8 (continued)

Hypothesis	Research hypotheses
H6a	Occupational identity will mediate the relationship between family expectations and employability of higher education students majoring in elderly care management.
H7	Financial support will positively influence the occupational identity of higher education students majoring in elderly care management.
H7a	Occupational identity will mediate the relationship between financial support and employability of higher education students majoring in elderly care management.
H8	Informational support will positively influence the occupational identity of higher education students majoring in elderly care management.
H8a	Occupational identity will mediate the relationship between informational support and employability of higher education students majoring in elderly care management.
H9	Values and beliefs will positively influence the occupational identity of higher education students majoring in elderly care management.
H9a	Occupational identity will mediate the relationship between values and beliefs and employability of higher education students majoring in elderly care management.

2.4.2 Empirical Model

The relationship between the independent variables (family expectations, financial support, informational support, values and beliefs) and the dependent variable (employability) in this empirical model is theoretically supported by ecological systems theory. The relationship between the independent variables (family expectations, financial support, informational support, values and beliefs), mediate variable (occupational identity) and the dependent variable (employability) in this empirical model is theoretically supported by identity control theory. Each of these factors contributes to shaping an individual's occupational identity, which continues to influence employability outcomes.

This model suggests that one's occupational identity mediates the impact of family expectations (H6, H6a), financial support (H7, H7a), informational support (H8, H8a), values and beliefs (H9, H9a) on employability of higher education students majoring in elderly care management. In addition, occupational identity (H5) has a direct impact on employability, indicating that occupational identity serves as a key mediating variable that links external support factors with employability outcomes.

Furthermore, there is a direct influence of family expectations (H1), financial support (H2), informational support (H3), and values and beliefs (H4) on employability, as illustrated in Figure 2.8.

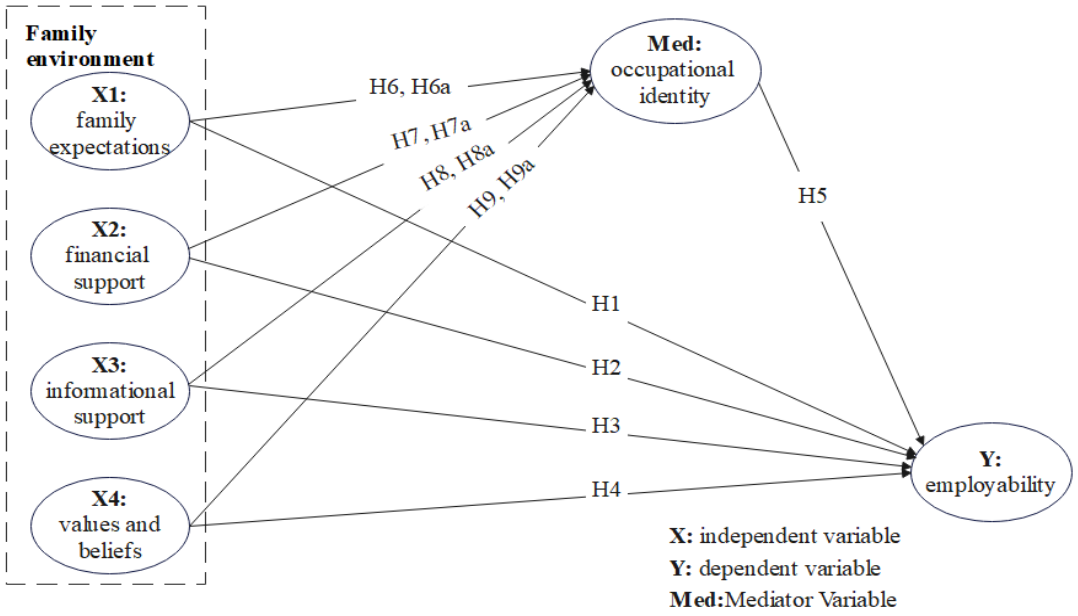

Figure 2.8 Empirical Model

2.5 Conclusion

This chapter first analyzes the context of the study, which mainly includes 1) explaining that there is a supply and demand relationship between the higher education students majoring in elderly care management and elderly care industry in China, and the students with high employability in elderly care management will be the professionals needed by this industry; 2) identifying the family environmental factors (family expectations, financial support, informational support,, value and belief) that impact the occupational identity and employability of elderly care management students, based on the current research on employability and the specific demands of the elderly care industry; 3)

Taking advantages of significant aging population and abundant higher education resources in elderly care area in Hubei Province, to explain why students in this region can provide effective employability strategies for elderly care management students in other regions.

Second, the relationship between the independent variables (family expectations, financial support, informational support,, value and belief) and the dependent variable (employability) was demonstrated using ecological systems theory; the relationship between the independent variables (family expectations, financial support, informational support, values and beliefs), mediate variable (occupational identity) and the dependent variable (employability) in this empirical model is theoretically supported by identity control theory.

Finally, the hypotheses of this study were formulated using past research results, and an empirical model of the employability of elderly care management students in the context of the family environment was constructed.

CHAPTER 3
METHODOLOGY

This chapter firstly discusses the research paradigm applicable to this study. Secondly, it outlines the research methodology employed in this study, incorporates both quantitative and qualitative approaches. It covers the research tools utilized, as well as the methods for data collection and analysis. Finally, the ethical considerations used in this study are presented.

3.1 Overview and Justification of Research Paradigm

This study employed a transformative mixed-methods research approach to investigate the factors influencing the employability of higher education students majoring in elderly care management within the context of the family environment. Rooted in the philosophy of pragmatism, this approach combined the strengths of quantitative research (positivism) and qualitative research (constructivism) to address the research problem comprehensively. First, quantitative methods were used to test the relationships between variables, providing objective and generalisable empirical data. Second, qualitative methods were applied to investigate individual experiences and contexts, offering deeper insights and extending the findings from the quantitative phase.

3.1.1 Pragmatism

Pragmatists view knowledge acquisition as a continuum, rather than as opposing, mutually exclusive poles of objectivity and subjectivity (William, 2024). Based on the philosophy of pragmatism, the mixed-methods approach integrates the strengths of quantitative research (positivism) and qualitative research (constructivism) to provide a comprehensive solution to investigate the factors influencing the employability of higher education students majoring in elderly care management within the context of the family environment. Pragmatism occupies a middle ground on the paradigm continuum in terms of inquiry approach. While positivism generally supports quantitative methods and deductive reasoning, and constructivism emphasizes qualitative approaches and inductive

reasoning, pragmatism integrates both ends, offering a more flexible and reflexive approach to research design (Shan, 2021). This mixed method based on the philosophy of pragmatism allows pragmatist researchers to choose the research design and methodology best suited to addressing the research question, actively engaging in the creation of data and theories (Brown, 2021).

Based on the discussion of paradigms, the pragmatism paradigm that combines the strengths of positivism and constructivism is considered applicable to this study. This paradigm guides the study, which employs a mixed quantitative and qualitative approach and divide into two phases. First, quantitative research aims to verify the relationships between family expectations, financial support, informational support, values and beliefs, and occupational identity with the employability of the higher education students majoring in elderly care management. Secondly, qualitative research aim to identify the main factors influencing employability of the higher education students majoring in elderly care management in the context of family environment.

3.1.2 Positivism

Empirical research, as a research paradigm, originated from Bacon's empirical philosophy and the scientific investigations of Newton and Galileo. Positivism argues that the only true knowledge is scientific and can only come from active verification of observable experiences. Firstly, positivist research is based on the worldview that "an objective world exists" and firmly believes in the existence of objective reality (Babbie, 2020). Secondly, positivist research continuously approaches this objective world through research. Lastly, the fundamental principles upheld by positivism are the objectivity and universality of scientific conclusions. It has emphasized that knowledge must be based on empirical facts obtained through observations and experiments. It aims to reveal general conclusions through empirical observations and experimental research methods and requires that these conclusions be verifiable under the same conditions. Based on these principles, the empirical research method can be summarized as the acquisition of objective material through extensive observation, experimentation, and investigation of the studysubject.

In terms of research methodology, positivism advocates the use of quantitative research methods. The complete research process generally includes the following three steps: 1) formulation of theoretical hypotheses; 2) collection of relevant information to

verify the theoretical hypotheses; 3) calculation of the relationship between independent and dependent variables using statistical models to validate the theoretical assumptions. In terms of information collection methods, quantitative research often employs experimental methods, questionnaire surveys, and structured interviews. The information collected is primarily quantitative, such as statistical data and operational variables (Babbie, 2020).

3.1.3 Constructivism

Social constructivism's modern roots lie in Berger & Luckmann (1966) and are influenced by Mannheim's earlier sociology of knowledge (Hromadzic & Popović, 2019). Generally, the constructivist research paradigm adopts a negative stance toward objectivity and knowability of social phenomena in terms of ontology and epistemology. It considers social phenomena as the result of human mental activities and acknowledges the inevitable interaction between researchers and the subjects of study. Therefore, truth is seen as a product of dialogue and clarification, which cannot be proven through experimental research or natural science methods. Constructivism advocates for qualitative research, defining "agreement" among researchers within a specific time and space as truth and believing that this "truth" can only be understood from the researchers' perspective. Methodologically, it positions the researcher as the primary research tool and emphasizes the impact of the researcher's qualities on the research outcomes (Babbie, 2020).

In conclusion, constructivism advocates for the study of the essence of lived experiences, aiming to elucidate the nature and meaning of phenomena. Qualitative research often lacks explicit research hypotheses initially and formulates them as the research progresses. Interviewing is a commonly used data collection method, such as in-depth interviews or focus group interviews.

3.1.4 The Paradigm for this Study

The first phase utilized quantitative research methods, rooted in positivism, to solve **RQ1:** How do family expectations, financial support, informational support, values and beliefs, and occupational identity relate to the employability of the higher education students majoring in elderly care management?

Positivism is a philosophical theory and scientific research paradigm that emphasizes acquiring knowledge through empirical observation and logical reasoning. It advocates that knowledge should be based on observable, measurable, and verifiable empirical facts, excluding the interference of subjective judgment, personal experience, or

supernatural factors. Recent studies highlight its role across various domains (Pashaei et al., 2023). Specifically, the researcher used the data from the questionnaire to validate the empirical model presented in Chapter 2 of this study and to analyze the causal relationships in the research hypotheses. 1) Questionnaire Design: A structured questionnaire is developed, including scales to measure family environment, occupational identity, and employability. 2) Sample Selection: The purposive sampling method and quota sampling method are used to select students majoring in elderly care management from the top 10 higher education institutes in Hubei that graduated or graduating in 2024-2025. 3) Data Collection: Data is gathered through both online and offline questionnaire distribution, with a small-scale pilot test conducted to evaluate the reliability and validity of the questionnaire. 4) Data Analysis: Descriptive and inferential statistical methods (e.g., regression analysis and structural equation modeling) are applied to verify the hypothesized relationships. Quantitative research, rooted in positivism, systematically tests the relationships between variables, offering objective evidence to support the theoretical framework. Its strengths lie in generality and precision: a large sample size ensures the study's conclusions are broadly representative, while statistical analysis guarantees rigor and reliability in measurements, enabling the accurate identification of key family environmental factors influencing employability of students.

Consider that positivism has certain limitations. First, it may be challenging to measure phenomena related to human intentions, attitudes, and thoughts, as these aspects often lack direct observability or tangible evidence (Crabtree, 2024). Additionally, data collected under positivism can be less reliable since participants might select answers randomly rather than responding truthfully, or they may lack the flexibility to provide responses that are more relevant to their personal circumstances (Henninger et al., 2023).

The second phase utilized qualitative research methods, rooted in constructivism, to solve **RQ2:** How are the main family environmental factors influencing employability of the higher education students majoring in elderly care management? The constructivist paradigm holds that research methodology should investigate "the mind and activities of meaning-making and sense-making" (Zhang et al., 2023), which is often practiced in qualitative research (Burns, 2019), such as the case study approach that commonly uses methods like interviews and observations (Fitzpatrick et al., 2023). Specifically, the researcher interviewed employers in the elderly care industry, graduating or graduated

students (2024-2025) majoring in elderly care management and corresponding family members, and teachers of elderly care management in order to identify employability requirements for students needed in the elderly care industry and strategies to improve these skills: 1) Participant Selection: Using purposive sampling, representative or significant samples are selected from the quantitative phase, including students, employers, teachers, and family members, to ensure a multi-perspective analysis. 2) Data Collection: Semi-structured interviews are conducted, focusing on themes such as family environment and occupational identity, to gain an in-depth understanding of individual experiences and perceptions. 3) Data Analysis: Thematic analysis is applied to code and categorize the interview transcripts, with the assistance of analysis software (e.g., NVIVO) to uncover core themes. The necessity of qualitative research lies in its ability to capture the complexity of family backgrounds and personal experiences, uncovering deeper factors that quantitative methods cannot fully address. It complements quantitative research by interpreting and expanding upon statistical results, ensuring a more comprehensive and contextually relevant understanding. Additionally, qualitative research provides rich narrative data, offering nuanced insights into the factors influencing employability.

In summary, through the integration of findings from the two-stage research methods, starting with quantitative research followed by qualitative research, the quantitative phase provides direction and a foundation for the qualitative phase. In turn, the qualitative phase further interprets and deepens the insights gained from the quantitative results, leading to a comprehensive understanding of the research problem. This pragmatic mixed-methods approach effectively balances the strengths of quantitative validation and qualitative exploration, accommodating the complexity of the research objectives and the diversity of contextual factors.

3.2 Quantitative Research

The research question that needs to be addressed in quantitative research is RQ1: How do family expectations, financial support, informational support, values and beliefs, and occupational identity relate to the employability of the higher education students majoring in elderly care management? The following section describes the research tools,

data collection administration, and data analysis methods associated with quantitative research.

3.2.1 Research Tool

3.2.1.1 Operational Definitions of Variables

Operational definitions are methods for defining the meaning of variables based on observable, measurable, and functional characteristics. The operations of variables are described in terms of specific behaviors, features, and indicators, and abstract concepts are converted into observable and testable items. In empirical research, operational definitions are fundamental and an essential prerequisite for the value of the study. Therefore, this study comprehensively describes the variables that constitute the higher education student's employability majoring in elderly care management in the elderly care industry. As shown in Table 3.1.

Table 3.1 Operational Definition of Variables

Variable Name	Operational Definition	Source
Family expectations	the perceived level of aspirations or demands that families place on individuals' career development.	Vautero et al. (2021)
Financial support	the extent to which individuals internalize financial support received from their families to manage the changing financial demands associated with participation in educational programs, which advance career development. (e.g., covering tuition, books, living expenses, or internship costs)	Sabri et al. (2020)
Informational support	the extent to which family members assist students in resolving academic or career-related decisions by providing information and guidance.	Salwani and Cahyawulan (2022)
Values and beliefs	to the extent to which family members influence and shape students' value systems and moral perspectives, such as respect, responsibility, and honesty, within the family environment, ultimately affecting their career-related social behaviors.	Tajuddin et al. (2025)

Table 3.1 (continued)

Variable Name	Operational Definition	Source
Occupational identity	the extent to which a composite sense of who one is and wishes to become as an occupational being is generated from one's history of occupational participation.	Hansson et al. (2022)
Employability	an individual's level of ability to obtain and maintain employment in the labour market, measured through skills, knowledge, and job-related qualities such as communication, teamwork, critical thinking, problem-solving, flexibility, and time management.	Shorman et al. (2024)

3.2.1.2 Variable Measurements

In this section, the variables in the model are measured in conjunction with the structural equation model proposed in this study. To ensure the reliability and validity of the variables, the scales used in the study refer to the measurement questions commonly and widely used in international-related literature studies. As shown in Table 3.2.

Table 3.2 Variable Measurement Scales

Variables	Original Items	Revised Items	Source
Family expectations	1. My family expects me to select a career that has a certain status. 2. My family expects me to make career decisions so that I do not shame them. 3. My family is only willing to support me financially if I choose a career of which they approve.	1. My family expects me to select a career that has a certain status. 2. My family expects me to make career decisions so that I do not shame them. 3. My family is only willing to support me financially if I choose a career of which they approve.	Fouad et al. (2010)

Table 3.2 (continued)

Variables	Original Items	Revised Items	Source
Family expectations	4. My family expects that my choice of occupation will reflect their wishes. 5. My family expects people from our culture to choose certain careers. 6. My family's career expectations for me are based on my gender.	4. My family expects that my choice of occupation will reflect their wishes. 5. My family expects people from our culture to choose elderly care related careers. 6. My family's career expectations for me are based on my gender.	Fouad et al. (2010)
Financial support	1. My family expects me to contribute financially to my career education and training. 2. Because my family supports me financially, I can focus on my career development. 3. My family has not been able to financially support my career decisions. 4. If I wanted to get additional education after high school, my family would provide financial support. 5. If I were to experience a difficult career situation, my family would support me financially.	1. My family expects me to contribute financially to my career education and training. 2. Because my family supports me financially, I can focus on my career development. 3. My family has not been able to financially support my career decisions. 4. If I wanted to get additional education after high education, my family would provide financial support. 5. If I were to experience a difficult career situation, my family would support me financially.	Fouad et al. (2010)

Table 3.2 (continued)

Variables	Original Items	Revised Items	Source
Informational support	1. My family shared information with me about how to obtain a job. 2. My family discussed career issues with me at an early age. 3. My family showed me how to be successful in choosing a career. 4. My family showed me what was important in choosing a career. 5. Watching my family work gave me confidence in my career. 6. My family provided guidance on which careers would be best for me. 7. My family has given me information about obtaining education/training. 8. My family supported me asking career-related questions.	1. My family shared information with me about how to obtain a job in the elderly care area. 2. My family discussed career issues with me at an early age. 3. My family showed me how to be successful in choosing a career in the elderly care area. 4. My family showed me what was important in choosing a career in the elderly care area. 5. Watching my family work gave me confidence in my career. 6. My family provided guidance on which careers would be best for me. 7. My family has given me information about obtaining education/training. 8. My family supported me asking career-related questions.	**Fouad et al. (2010)**

Table 3.2 (continued)

Variables	Original Items	Revised Items	Source
Values and beliefs	1. My family expects that I will consider my religion/spirituality when making career decisions. 2. My family explained how our values and beliefs pertain to my career choices. My family expects my career to match our family's values and beliefs.	1. My family expects that I will consider my religion/spirituality when making career decisions. 2. My family explained how our values and beliefs pertain to my career choices. My family expects my career to match our family's values and beliefs (refers to the set of behavioural norms, moral standards, and belief systems collectively recognised and followed by family members, such as respect for elders, honesty and integrity, and social responsibility).	**Fouad et al. (2010)**
Occupational identity	1. When referring to my profession, I usually say "we" rather than "they". 2. I consider my success as the success of healthcare workers. 3. I care very much about other people's views on my career. 4. The praise my profession from people,which = is the praise they give on me.	1. When referring to my profession, I usually say "we" rather than "they". 2. I consider my success as the success of healthcare workers. 3. I care very much about other people's views on my career in the elderly care area. 4. The praise my profession from people,which is the praise they give on me.	**Li et al. (2020)**

Table 3.2 (continued)

Variables	Original Items	Revised Items	Source
Occupational identity	5. If there are some criticisms of my career from the media, I will feel ashamed and embarrassed. 6. My job is important. /I believe in the importance of my job. 7. I am confident in my ability at work. 8. My job will exercise effects on patients' conditions. 9. My job is meaningful. 10. I have the necessary qualifications and skills for my job. 11. I understand the responsibilities and requirements of the work. 12. Healthcare work suits me. 13. I know my role.	5. If there are some criticisms of my career from the media, I will feel ashamed and embarrassed. 6. My job is important. /I believe in the importance of my job. 7. I am confident in my ability at work. 8. My job will exercise effects on elder's conditions. 9. My job is meaningful. 10. I have the necessary qualifications and skills for my job. 11. I understand the responsibilities and requirements of the work. 12. Healthcare work suits me. 13. I know my role.	**Li et al. (2020)**
Employability	1. I believe I could easily obtain a comparable job with another employer. 2. I believe I could easily obtain another job that is in line with my level of education and experience.	1. I believe I could easily obtain a comparable job with another employer in the elderly care industry. 2. I believe I could easily obtain another job that is in line with my level of education and experience in the elderly care industry.	Chughtai (2019)

Table 3.2 (continued)

Variables	Original Items	Revised Items	Source
Employability	3. I believe I could easily obtain another job that would give me a high level of satisfaction.	3. I believe I could easily obtain another job that would give me a high level of satisfaction in the elderly care industry.	Chughtai (2019)

3.2.1.3 Structure of the Questionnaire Framework

The questionnaire used in this study consists of three sections: an introduction, basic personal information, and measurement scales for the variables related to the specific field of study. The details are given below:

First, the introduction part. It is mainly to explain the target reasons, main contents, and precautions of the survey research, and at the same time, clearly state that the related survey research protects personal privacy and is not for commercial use. The content of this part is and clear to establish the trust of the survey respondents and dispel their doubts and concerns (Yang, 2020).

Second, basic personal information about the respondents. This mainly includes the gender, year of graduation, name of the university, grade point average (GPA). This is used primarily for descriptive statistics of the sample.

Third, the variables that constitute the employability of higher education students majoring in elderly care management are tested. A Likert 7-point scale is primarily used to measure them. 1 indicates strong disagreement, and 7 indicates strong agreement.

3.2.2 Data Collection Administration

3.2.2.1 Target Population

The target population of this study consists of students who have graduated or are about to graduate in 2024–2025 from undergraduate programs in Elderly Care Management at higher education institutions in Hubei Province, China. These students are particularly suited for this study as they possess both academic training and practical exposure to elderly care services, as well as relevant experiences within family environments.

According to the Ministry of Education of China and the Hubei Education Department, as of the end of 2023, there are 1,362 students who have graduated or are in their final year in Elderly Care Management programs across 15 universities in Hubei Province. Therefore, the defined target population of this research is 1,362 students, as shown in Table 2.6: list of the 15 universities in Hubei offering elderly care management Major.

3.2.2.2 Sampling Method

This study employed a combination of purposive sampling and quota sampling to ensure the representativeness and adequacy of the sample:

1. Purposive Sampling

Ten universities were selected out of the fifteen offering Elderly Care Management programs in Hubei Province. Selection was based on the significance, continuity, or excellence of their programs (e.g., number of graduates, program history, academic reputation). Universities with low or discontinued enrollment in this field were excluded. Therefore, this study employed a purposive sampling technique and selected the following 10 universities as target institutions, as shown in Table 3.3 below.

Table 3.3 Number of Graduates Majoring in Elderly Care Management Who Graduated in the 2023-2024 Year in Hubei

University & Admissions Office Website	Year of Graduation	Graduation Count	Total
Hubei College of Chinese Medicine http://zjb.hbzyy.net/	2025 graduates 2024 graduates	63 80	143
Hubei Polytechnic Institute https://zs.hbvtc.edu.cn/	2025 graduates 2024 graduates	10 30	40
Science and Technology College of Hubei University of Arts and Science https://zsw.hbasstu.net/	2025 graduates 2024 graduates	100 50	150
Hubei Health Vocational College https://hbjk.chunlaiedu.com/	2025 graduates 2024 graduates	75 102	177

Table 3.3 (continued)

University & Admissions Office Website	Year of Graduation	Graduation Count	Total
Hubei Three Gorges Polytechnic College https://www.tgc.edu.cn/	2025 graduates 2024 graduates	32 27	59
Xianning Vocational Technical College https://zhaoban.xnec.cn/	2025 graduates 2024 graduates	24 15	39
Wuhan Social Work Professional College https://www.whmzxy.edu.cn/zsw/	2025 graduates 2024 graduates	27 16	43
Huanggang Polytechnic College https://www.hbhgkj.edu.cn/	2025 graduates 2024 graduates	24 10	34
Ezhou Polytechnic College https://www.ezu.cn/	2025 graduates 2024 graduates	16 16	32
Huanggang Vocational College of Science and Technology https://www.hbhgkj.edu.cn/	2025 graduates 2024 graduates	67 26	93
Total			810

2. Quota sampling

After identifying the target universities, the study used quota sampling to ensure proportional representation of students from each university. The proportion of samples selected from each university corresponds to the number of graduates in 2024–2025, thereby enhancing representativeness while maintaining practical feasibility (Kumar et al., 2020; Moser, 2004).

3.2.2.3 Sample Size

In structural equation modeling (SEM), an adequate sample size is essential to ensure model validity. Based on the recommendation of Kock and Hadaya (2018), the minimum sample size should be 5-10 times the number of observed variables. With a total of 38 measurement items used in this study (see Table 3.2), the calculated minimum sample size is 380 participants (10*38).

To ensure a valid response rate of over 70%, as suggested by Babbie (2020), the researcher determined that a total of 600 questionnaires would be distributed. This approach allows for some non-response and ensures the acquisition of at least 380 valid responses. The final sample was proportionally distributed across the ten selected universities, as shown in Table 3.4 below.

Table 3.4 Questionnaire Allocation Table

University	Total graduate between 2024-2025	Proportion	No. of Sample
1) Hubei College of Chinese Medicine	143	18%	106
2) Hubei Polytechnic Institute	40	5%	30
3) Science and Technology College of Hubei University of Arts and Science	150	19%	111
4) Hubei Health Vocational College	177	22%	131
5) Hubei Three Gorges Polytechnic College	59	7%	44
6) Xianning Vocational Technical College	39	5%	29
7) Wuhan Social Work Professional College	43	5%	32
8) Huanggang Polytechnic College	34	4%	25
9) Ezhou Polytechnic College	32	4%	24
10) Huanggang Vocational College of Science and Technology	93	11%	69
Total	**810**	**100%**	**600**

3.2.2.4 Data Collection Method

A professional questionnaire website (https://www.wjx.cn) was used to create an online questionnaire. With the assistance of elderly care management teachers at each university, they help to send the questionnaire link to the students through email, WeChat, or QQ. For teachers and students which connected by email, the teachers used the university's official email system to send personalized emails to graduating or graduated students in 2024 and 2025, including a brief introduction to the purpose of the

questionnaire and link, encouraging students to participate promptly. If they connected on WeChat or QQ, either individually or within a class group chat, teachers sent the link to each student individually, providing necessary instructions. Additionally, teachers pinned important announcements on WeChat or QQ in the group chat or sent repeated reminders through multiple channels before the questionnaire's deadline to ensure every student received the notification and completed the questionnaire. This personalized approach significantly improved the response rate and engagement among students.

3.2.3 Data Analysis

3.2.3.1 Pilot Study

The purpose of the pilot study is to assess the reliability and validity of the initial questionnaire scale based on the preliminary analysis of the small-scale questionnaire test data to determine the feasibility of the questionnaire (Khanal & Chhetri, 2024). Johanson and Brooks (2010) recommend that when developing a new scale, researchers should use a minimum of 5 participants per item in the pilot study. Given that our questionnaire includes 38 items, surveying more than 114 (38*5) volunteers meets the sampling requirement. First, the initial questionnaire was amended and supplemented based on the assessment results to ensure the quality of the research data and to form a formal questionnaire. Secondly, the data collected is organized. The researcher conducted a preliminary analysis of the data using IBM SPSS Statistics (Version 26.0) with license, and the scale's reliability was determined, mainly concerning Cronbach's Alpha coefficient, to determine whether certain non-compliant items should be removed. Taber (2018) states that if the coefficient value of Cronbach's Alpha is higher than 0.7, it usually indicates that it is acceptable. The pilot test analysis revealed the following results: all variables had a Cronbach's Alpha greater than 0.7, indicating good reliability (Peterson, 1994). The details are shown in Table 3.5 below.

Table 3.5 Reliability Analysis of Pilot Test

Variable	Cronbach's Alpha	number of items
Family expectations	0.915	6
Financial support	0.962	5
Informational support	0.984	8
Values and beliefs	0.970	3

Table 3.5 (continued)

Variable	Cronbach's Alpha	number of items
Occupational identity	0.969	13
Employability	0.917	3

The validity of the pilot test is measured by using factor analysis, and the validity analysis mainly uses Kaiser-Meyer-Olkin (KMO) to test the correlation between questionnaire variables on the questionnaire items. The sampling is adequate if the KMO value is more significant than 0.6. If the Sig value of Bartlett's test of sphericity is <0.001, it also indicates that it is suitable for factor analysis (Tong, 2024). This research used the varimax rotation to conduct an exploratory factor analysis of the research instrument. Factor loadings greater than 0.4 are considered a stable criterion (Velicer, 1988). The results of the exploratory factor analysis showed: each variable's factor loading greater than 0.4, the results of the pre-test data show that the questionnaire is good. The detail is shown in Table 3.6 as followed.

Table 3.6 Exploratory Factor Analysis of Pilot Test

Variable	KMO	Bartlett's test	Factor loading
Family expectations	0.914	p<0.001	0.748–0.859
Financial support	0.897	p<0.001	0.876–0.918
Informational support	0.957	p<0.001	0.927–0.952
Values and beliefs	0.779	p<0.001	0.891–0.930
Occupational identity	0.956	p<0.001	0.795–0.861
Employability	0.759	p<0.001	0.784–0.815

To ensure the reliability and validity of the questionnaire, this study reviewed the questionnaire based on the three criteria of clarity, relevance, and specificity, as suggested by Quinaud et al. (2018). Based on the pilot survey results, the researcher analyzed each item for clarity and ease of understanding.

In addition, the researcher communicated with some participants to discover any difficulties they encountered in the response process. The focus on verifying the clarity

of the items and ensuring that the response options include all possibilities. In addition, the questionnaire had to be revised based on relevant suggestions made by the participants.

3.2.3.2 Reliability Analysis

In the quantitative study, the more common Cronbach's Alpha coefficient was employed to measure the internal consistency of the overall questionnaire and the individual question items (DeVellis & Thorpe, 2021). Taber (2018) points out that Cronbach's Alpha coefficient takes values between 0 and 1. If the coefficient value of Cronbach's Alpha is higher than 0.7, it usually indicates that it is acceptable; if Cronbach's alpha coefficient is between 0.5 and 0.7, it is possible to determine from this coefficient that there may be some problems with the measured items; if the coefficient is below 0.5, it is an indication that the scale needs to be considered for further revision.

3.2.3.3 Validity Analysis

To test the structural validity of the scale, factor analysis should first be conducted. Before conducting factor analysis, assessing whether the variables are suitable for factor analysis through Kaiser-Meyer-Olkin (KMO) value is necessary. The criterion for judgment is the KMO value, and the higher the KMO value, the more convenient it is for factor analysis. The specific ranges of KMO values are as follows: a KMO coefficient greater than 0.9 indicates it is well suited for factor analysis. In contrast, a KMO coefficient between 0.80 and 0.90 indicates moderate. a KMO coefficient between 0.70 and 0.80 indicates that it is acceptable, while a KMO coefficient between 0.6 and 0.7 suggests it can be done cautiously (Min et al., 2021). According to Kaiser and Rice (1974), a substantial correlation exists in the data when the KMO is >> 0.7, and the significance level of Bartlett's test is below 0.05.

3.2.3.4 Confirmatory Factor Analysis

In addition, use the structural equation modeling software AMOS 26.0 software to draw the path diagram, use the maximum likelihood method to calculate the parameters to be estimated, and then verify whether the hypothesis or the preliminary dimension is reasonable and valid according to the calculation results.

First, the convergent validity and the composite reliability of the dimensions in the scale were tested. As a general criterion, if the CR (Composite Reliability) value is more significant than 0.7, it indicates that all of its measures can consistently explain the

latent variable (Fornell & Larcker, 1981). If the AVE (Average Variance Extracted) value is more important than 0.5, and the open square of the AVE value is greater than the correlation coefficient (Fornell & Larcker, 1981). In that case, it indicates that the designed scale has good convergent and discriminant validity. In addition, the above values of CR and AVE need to be calculated separately by factor loading values.

Secondly, the discriminant validity of the dimensions in the scale was tested. This step required using the AVE value and the correlation coefficient between two variables. If the square root value of the AVE value of the variable is greater than the correlation coefficient between the two variables, the discriminant validity test is considered valid (Fornell & Larcker, 1981).

Third, the correlation analysis among the dimensions. In this study, the Pearson correlation coefficient method is used to analyze the correlations among the variables. The Pearson correlation coefficient is usually between -1 and 1, and a correlation greater than 0 is positive. In contrast, the opposite is negative, and the larger the absolute value is, the stronger the correlation is (Fornell & Larcker, 1981).

3.2.3.5 Common Method Bias Test

Harman's single-factor test can be used to detect common method bias (CMB) in survey data. CMB can introduce bias into the collected data, potentially affecting the results. If an unrotated exploratory factor analysis reveals that a single factor explains less than 40% of the variance, then CMB is not severe (Podsakoff et al., 2003). Additionally, procedural remedies can be employed in the research process to ensure that the sample follows a normal distribution to mitigate the threat of common method bias. Procedural remedies include temporal and geographical separation of measurements. By collecting questionnaires at different time points, temporal separation is achieved. Distributing the survey online ensures geographical separation, mitigating common method bias.

3.2.3.6 Building a Structural Equation Model

Firstly, the structural equation model of this study was tested for fitness. For the assessment of the overall fitness of the model, the fit indices of $\chi 2/df$, GFI, AGFI, CFI, NFI, and RMSEA are mainly referenced for judgment. Among them,$\chi 2/df$ less than 3 indicates acceptable goodness of fit, and when the sample size is more significant, according to Lomax (2004), this indicator less than 5 meets the standard requirements for

acceptability; RMSEA less than 0.08 indicates the goodness of fit; the values of CFI, NFI, GFI, and AGFI are all greater than 0.9, showing the superiority of fit. The model has a high degree of fitness when all the fit indicators meet the validation criteria requirements.

3.2.3.7 Mediating Effect Detection

This study refers to the mediated effects model proposed by Wen et al. (2022) and incorporate the Bootstrap method proposed by Preacher and Hayes (2004) to test for mediated effects.

First, the core of the mediated effects model is examined the process of influence and the mechanism of intervention of the known relationship between the independent and dependent variables through the mediating variable. Suppose the independent variable is X and the dependent variable is Y. Changes in X affect changes in Y; if there exists a mediating variable M such that the independent variable X affects Y through M. Figure 3.1 illustrates the process of X to Y. Figure 3.2 illustrates the process of X through M ultimately to Y. Where a denotes the coefficient of X to M, b denotes the coefficient of M to Y, c denotes the total effect of X to Y, and c' represents the direct impact of X to Y.

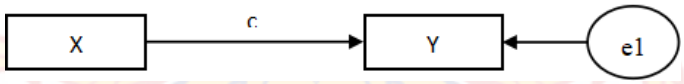

Figure 3.1 The Process of X to Y

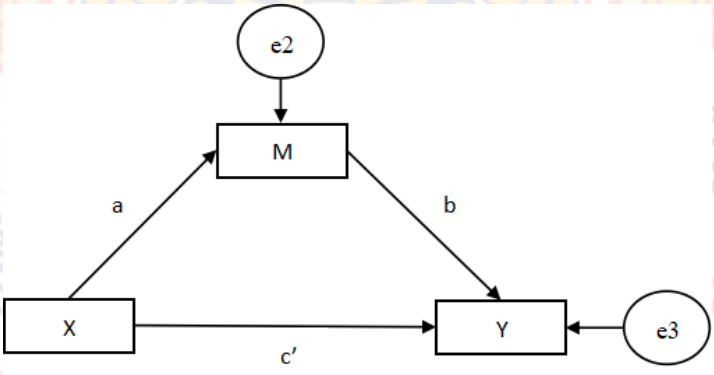

Figure 3.2 The Process of X through M ultimately to Y

Source: The mediated effects model (Wen et al., 2022)

The bootstrap method can be applied to medium and small samples and various mediated effect models and supports the placement of multiple independent variables X, mediating variables M, and control variables, etc., at one time. The test is whether the 95% confidence interval of the product term (a*b) of the regression coefficient a and regression coefficient b includes the number 0; if the 95% confidence interval does not include the number 0, it means that there is a mediating effect; if it is said that the 95% confidence interval consists of the number 0, that is to say, it means that there is no mediating effect (Preacher & Hayes, 2004).

3.3 Qualitative Research

The research question that needs to be addressed in qualitative research is RQ2: How are the main family environmental factors influencing employability of the higher education students majoring in elderly care management?

Jones et al. (2021) argue that qualitative research is well-suited for exploring complex issues and requires considering the problem from multiple perspectives. According to Aguilera et al. (2024), stakeholders are all individuals and groups that influence the achievement of an organization's goals. Data triangulation helps this study establish the stakeholders involved in qualitative research. Therefore, solutions to the research problem must be found from a multi-stakeholder perspective.

In higher education, stakeholders were defined as 'individuals or groups who believe that college is accountable to them and behave as if it were (Varadarajan et al., 2023). Firstly, according to Bloch et al. (2023), students, employers, government, and universities are the foremost familiar stakeholders in higher education institutions, so students majoring in elderly care management and employer of elderly care institutes are directly stakeholders in the study of employability of the higher education students. Secondly, based on the context of family environment in this study, family members of students majoring in elderly care management can be the unique direct stakeholders. That’s because: 1) Students majoring in elderly care, like graduates from other fields, can use the income growth that comes with enhanced employability to materially improve the quality of life for their family members. 2) The professional elderly care knowledge that students accumulate through their studies and work can become a valuable resource for the family members. By sharing this knowledge, students can help their families better

address the health and elderly care needs that arise in old age. More importantly, if elderly family members eventually require elderly care care, the students' professional elderly care background and working experience can provide additional support. For instance, they can assist family members in making more informed choices about suitable elderly care services or use their elderly care source to secure higher-quality care of family members. This form of practical assistance in elderly care can significantly enhance the quality of life for their family members in old age. Therefore, family members are not only financial beneficiaries but also direct stakeholders in enhancing the employability of students majoring in elderly care management. Thirdly, the enhancement of students' employability not only reflects teachers' teaching abilities and professional value but also allows them to gain greater career satisfaction and social recognition. Therefore, the stakeholders directly related to this study are: 1) employers in the elderly care industry, 2) graduates (2024-2025) majoring in elderly care management and corresponding family members, and 3) teachers of elderly care management.

The main research idea for qualitative research is to bring together the results of interviews with employers in the elderly care industry, graduating or graduated students (2024-2025) majoring in elderly care management and corresponding family members, and teachers of elderly care management, through this method of bringing together different perspectives to comprehensively describe employability the elderly care industry needs for graduates, as a way to provide a theoretical and practical basis for strategies to enhance employability of the higher education students majoring in elderly care management in the context of the family environment.

3.3.1 Research Tools

This study utilized a semi-structured interview method for data collection. Current research on the influence of family environment on employability factors primarily focuses on parents' educational level, family cohesion and adaptability, and family support for academic success and satisfaction. Studies have shown that financial support from the family plays a crucial role in helping individuals gain access to educational and career training opportunities, thereby enhancing employability. Financial support enables individuals to access higher-quality education and training, reduces financial pressure, and allows them to focus on career development (Djulbegovic et al., 2023). Additionally, career-related information and resources provided by parents or other family members

help individuals better understand job options, industry trends, and recruitment processes during the job search. This informational support not only assists in making more strategic career decisions but also enhances confidence and alignment with career paths, fostering greater self-assurance and adaptability in job-seeking and professional growth (Yin et al., 2020). However, existing research rarely addresses the impact of family expectations, values and beliefs on employability. Specifically, it remains unclear whether excessively high or misaligned expectations from family members influence an individual career choices and their employability development. Moreover, the interaction mechanism between family values&beliefs and individual employability requires further investigation. Therefore, this study aims to enrich and expand the results of quantitative research through the use of semi-structured interviews in qualitative research. This means that interacting with them gives the researcher a deeper understanding of each stakeholder's perception of employability of students majoring in elderly care management, and provides information different from the existing literature.

A previous study has shown that employers' perceptions of the employability of university graduates mainly focus on the following aspects: emotional intelligence, practical skills, creativity, problem-solving, and work-based learning (Justyna et al., 2023). As above mentioned, the respondents directly related to this study are employers in the elderly care industry, graduating or graduated students (2024-2025) majoring in elderly care management and corresponding family members, teachers of elderly care management. The content of the respondents' interview questions reflect the characteristics of these three respondents identities, focusing on the following three main areas: exploring the employability needed in the elderly care industry, exploring the family environment of graduates (2024-2025) majoring in elderly care management, and exploring the relationship between family environment and students' employability. So the content of the stakeholders' interview questions is shown in Table 3.7.

Table 3.7 Respondents' Interview Questions

Interview for Employers in the Elderly Care Industry
A. Investigating the employability needed in the elderly care industry *Goal: To identify the core skills and abilities employers believe are essential for professionals in elderly care and understand the qualities they prioritize when hiring recent graduates.* 1) What do you consider the most critical skills or abilities that professionals need in the elderly care industry? 2) When hiring recent graduates, what qualities related to employability do you focus on most?
B. Investigating the family environment of elderly care students *Goal: Investigate employers' perspectives on the family environment of students and how it may impact their employability and development in the elderly care industry.* 3) Which main factors of a student's family environment (such as financial support or family attitudes toward elderly care) do you think that might influence their employability in elderly care? 4) Which positive factors within the family (such as family support or encouragement) do you believe help students adapt and succeed in the elderly care industry? 5) Which negative factors in the family environment (such as prejudice against the elderly care industry or lack of support) do you feel might hinder students' professional development in this field?
C. Investigating employers' views on how the family environment may influence students' development in Employability (emotional intelligence, practical skills, creativity, problem-solving, and work-based learning) *Goal: Examine employers' views on how the family environment may influence students' development in emotional intelligence, practical skills, creativity, problem-solving, and work-based learning.* 6) How do you think the family environment impact a student's emotional intelligence, such as their ability to understand and manage emotions, and how significant is this for employability in elderly care? 7) To what extent does the family environment help students develop practical skills needed in elderly care, such as caregiving techniques or health management?

Table 3.7 (continued)

Interview for Employers in the Elderly Care Industry
8) What aspects of the family environment might foster creativity in students, enabling them to develop innovative solutions in the elderly care industry?
9) To what extent do you think family support contributes to students' development of problem-solving skills, such as critical thinking and adaptability, which are vital in the elderly care field?
10) How important do you think family support is in motivating students to seek internships or part-time roles, and what impact do these experiences have on their employability in elderly care?
Interview for Graduating or Graduated Students (2024-2025) Majoring in Elderly Care Management and Corresponding Family Members
A. Investigating the employability skills needed in the elderly care industry *Goal: Understand graduates and their corresponding family members' perspectives on the professional skills needed for a successful career in elderly care and their perceived areas for personal improvement.*
1) What professional skills do you think that are essential for successful employment in the elderly care industry?
2) What are the key areas you feel you (or your family member) need to improve upon to succeed in elderly care?
B. Investigating their own family environment *Goal: Investigate how graduates and corresponding family members perceive the family environment's impact on graduates' employability and career choice, including both supportive and limiting factors.*
3) Which main factors in your family environment (such as financial status or parental education background) do you feel have influenced your (or your family member's) employability in choosing a career in elderly care?
4) Which supportive factors within your family (such as understanding and support for working in elderly care) have helped you (or your family member) grow and adapt within the industry?
5) Which factors in your family environment (such as misunderstandings about elderly care) might hinder your (or your family member's) employability in this field?

Table 3.7 (continued)

Interview for Graduating or Graduated Students (2024-2025) Majoring in Elderly Care Management and Corresponding Family Members
C. Investigating graduates and corresponding family members' views on how the family environment may influence graduates' development in employability (emotional intelligence, practical skills, creativity, problem-solving, and work-based learning) *Goal: Gain insights into how graduates and their corresponding family members perceive the role of their family environment in developing graduates' emotional intelligence, practical skills, creativity, problem-solving, and work-based learning.*
6) To what extent has your family environment helped you (or your family member) develop emotional intelligence, such as understanding and managing emotions, which is valuable in elderly care work?
7) How does your family environment contribute to your (or your family member's) development of practical skills needed in elderly care, such as care-giving techniques or health management?
8) Has your family helped foster your (or your family member's) creativity, and how has this ability supported your (or your family member's) efforts to find innovative solutions in elderly care?
9) Do you feel that your family environment has helped you (or your family member) enhance your (or your family member's) problem-solving abilities, such as critical thinking or adaptability, in the elderly care field?
10) Has your family encouraged you (or your family member) to gain relevant internship or work experience before graduation, and how has this helped you (or your family member) transition into the elderly care industry?

Table 3.7 (continued)

Interview for Teachers of Elderly Care Management
A. Investigating the employability skills needed in the elderly care industry *Goal: Gather teachers' perspectives on the core skills they believe are essential for working in elderly care and the areas they feel students need to strengthen.* 1) As a teacher of elderly care management, what core professional skills do you believe are necessary for your students' work in elderly care? 2) What skills do you feel your students need to strengthen the most to succeed in the elderly care industry?
B. Investigating students' family environment *Goal: Examine teachers' perceptions of the supportive or limiting factors within the students' family environment that influence employability in elderly care.* 3) Which main aspects of the family environment (such as educational background or views on elderly care) do you think impact your students' employability in elderly care? 4) Which factors within the family (such as support and recognition of elderly care's value) positively help your students build employability skills in this field? 5) Which family-related factors (such as prejudice against elderly care work or concerns about career prospects) might limit your students' ability to develop employability skills?
C. Investigating teachers' views on how students' family environment may influence their development in employability (emotional intelligence, practical skills, creativity, problem-solving, and work-based learning) *Goal: investigate teachers' views on how the family environment influences students' emotional intelligence, practical skills, creativity, problem-solving, and work-based learning.* 6) To what extent do you think students' family environment has helped them develop emotional intelligence, such as understanding and managing emotions, which are crucial for their work in elderly care? 7) How do you feel students' family environment supports them in developing the practical skills required in elderly care, such as caregiving techniques or health management?

Table 3.7 (continued)

Interview for Teachers of Elderly Care Management
8) What aspects of students' family environment do you think foster their creativity, enabling them to find innovative solutions in elderly care?
9) Has the family environment helped students develop problem-solving skills, such as critical thinking or adaptability, which are essential in elderly care?
10) Do you encourage your students to engage in work-based learning, and how do you think it enhances their employability in elderly care?

Source: An Assessment of Employers' Expectations to Enhance the Employability of University Graduates in Namibia (Justyna et al., 2023).

3.3.2 Data Collection Administration

3.3.2.1 Unit of Analysis

To ensure the reliability and validity of the qualitative research in this study, data triangulation was utilized. Data triangulation refers to the use of multiple sources of data or perspectives to verify findings and enhance the credibility of research. This method is particularly suitable for qualitative research, as it strengthens the trustworthiness of the data and ensures that findings are not solely dependent on one source or perspective. It helps to reduce biases and provides a more holistic view of the phenomena being studied. This approach has been widely recognized and supported by recent studies. For instance, Abdalla et al. (2018) highlight the role of triangulation in enhancing the reliability and confirmability of qualitative research by systematizing its application. Similarly, Noble and Heale (2019) discuss triangulation as a strategy for enhancing credibility and validity by integrating multiple methods or perspectives. Teixeira Reis et al. (2022) further demonstrate how triangulation minimizes bias by examining phenomena from multiple perspectives. According to data triangulation, the participants comprised three main groups: 1) employers from elderly care institutions; 2) students in elderly care management programs graduated or graduating (2024-2025) along with their families; and 3) teachers in the field of elderly care management. This approach effectively integrates diverse perspectives, ensuring a more comprehensive and well-rounded understanding of the subject.

As stated in Chapter 2, elderly care institutions are classified and evaluated into five grades in China, ranging from grade 1 to grade 5, from lowest to highest. The

higher the grade, the stronger the institution's overall capabilities. The grade is represented by a star symbol, valid for three years. This evaluation is crucial for providing a reference for choosing elderly care institutions. So this study choose the top 10 elderly care institutes from the latest list of four-star above institutions rated by the Hubei Department of Civil Affairs in 2023 (Table 2.7). Accordingly, one employer was chosen from each elderly care institution.

As illustrated in Table 3.3: number of graduates majoring in elderly care management who graduated in the 2023-2024 year in Hubei, this study selected 10 universities as target institutions. The graduating or graduated students (2024-2025) majoring in elderly care management and corresponding family members, and teachers of elderly care management were selected from the same ten higher education institutions. Accordingly, one student and one teacher were chosen from each university, and for each selected student, a corresponding family member was also included.

So the elderly care institutions and high education institutions to be interviewed are shown as below:

Table 3.8 Elderly Care Institutions and High Education Institutions to be Interviewed

Elderly Care Institutions *(Selected employers from)*	**High education institutions offering elderly care management majors in Hubei** *(Selected teachers, students and corresponding family members from)*
1) Social Welfare Institution of Wuhan	1) Hubei College of Chinese Medicine
2) Taikang Elderly Care Institution of Wuhan	2) Hubei Polytechnic Institute
3) Social Welfare Social Welfare Institution of Wuhan Hanyang District	3) Science and Technology College of Hubei University of Arts and Science
4) Social Welfare Social Welfare Institution of Wuhan Jianghan District	4) Hubei Health Vocational College
5) Social Welfare Institution of Xiaogan	5) Hubei Three Gorges Polytechnic College
6) Social Welfare Institution of Huangshi	6) Xianning Vocational Technical College

Table 3.8 (continued)

Elderly Care Institutions *(Selected employers from)*	**High education institutions offering elderly care management majors in Hubei** *(Selected teachers, students and corresponding family members from)*
7) Sunshine Welfare Institution of Guangshui	7) Wuhan Social Work Professional College
8) Zhaoshang Guanyi Elderly Care Institution of Wuhan Hanyang District	8) Huanggang Polytechnic College
9) Social Welfare Institution of Jiangling	9) Ezhou Polytechnic College
10) Elderly Care Service Center of Wuhan Qiaokou District Yijia Street	10) Huanggang Vocational College of Science and Technology

As mentioned in Chapter 2, Hubei Province has abundant resources in professional elderly care institutions, with 165 institutions recorded by the end of 2023. Consequently, graduating or graduated students in 2024-2025 majoring in elderly care management in Hubei have more opportunities to participate in internships related to elderly care compared to those in other regions. This resource advantage enables students to gain practical experience, develop a deeper understanding of professional skills required in the field, and develop strategies to enhance their employability. What's more, students majoring in elderly care management and their family members can directly or indirectly gain deeper insights into the elderly care industry, which helps them better understand the nature, requirements, and career prospects of the profession, thereby providing stronger support for students' career decisions and development. Additionally, employers from elderly care institutions in Hubei have a clearer understanding of the future development trends in elderly care management. They can provide valuable feedback on the professional skills required by their institutions, helping students better prepare for the evolving demands of the industry. Notably, as mentioned in Chapter 2, Hubei is the first province in the mid-region of China to establish an elderly care program, which means that local teachers have accumulated extensive experience in teaching and practice, so teachers of elderly care management in Hubei have a deep understanding of curriculum

design, practical teaching, and industry needs in elderly care. Thus, the collaborative involvement of these stakeholders offers a comprehensive and objective perspective for studying how family environmental factors influence the employability of students majoring in elderly care management.

3.3.2.2 Sampling Method

In qualitative research, the selection of sampling methods is crucial to ensure that the data collected is rich, relevant, and capable of providing in-depth insights. The sampling technique for the qualitative research of this study was a combination of purposive and snowball sampling.

Purposive sampling is a non-random sampling method in which researchers intentionally select participants based on specific characteristics aligned with the research objectives (Andrade, 2020). This approach is particularly effective in qualitative research, as it allows researchers to focus on individuals with relevant experience or knowledge, directly contributing valuable information to the research questions. In this study, purposive sampling was used to initially screen respondents familiar with elderly care management, including employers from elderly care institutions, teachers and students in this field, to determine whether the students had acquired relevant professional skills and knowledge. Snowball sampling is a chain-referral sampling method in which initial participants recommend other participants with potential participants (Leighton et al., 2021). This method is especially useful when the target population is hard to locate or when a broader network within a specific field is needed. In this study, after selecting the initial respondents, snowball sampling was used to expand the sample size. By asking the initial respondents to recommend others who met the research criteria, this method progressively widened the sample range, capturing a diverse range of perspectives from employers, students, and family members familiar with elderly care management.

Purposive sampling

Firstly, the purposive sampling method was used in this study. The primary goal of this study is to analyze the influence factors of employability of elderly care management students, specifically examining how family environment influences their employability. To achieve this, purposive sampling was employed to select individuals closely related to this field, including 5 employers from elderly care institutions, 5 teachers, 5 students with their corresponding family members in this field. Employers were

chosen because they directly observe and assess students' skills and educational backgrounds during recruitment. Their insights reveal whether students possess the skills that meet industry requirements and provide an understanding of employers' perceptions of graduates' professional competencies. Teachers can provide more in-depth insights into job adaptability and the match between educational preparation and employment demands. Students, along with their corresponding family members, can offer valuable perspectives on career expectations, challenges in transitioning to the workforce, and the role of family support in employment decisions. This targeted sample selection aids in gathering direct information regarding employer awareness of the program, students' skill levels, and how these factors jointly influence employability.

Snowball sampling

After selecting the initial fifteen respondents, snowball sampling was used to further expand the sample to thirty. The initial participants were asked to recommend others with relevant expertise in elderly care management, leading to the inclusion of an additional fifteen participants (five employers, five teachers, and five students along with their corresponding family members). This approach allowed for a broader range of perspectives while ensuring that the sample remained relevant to the study's focus (Akkaş & Meydan, 2024). This method allowed the sample to expand naturally, incorporating additional participants who provided relevant insights into elderly care management. In turn, it allowed for a more nuanced exploration of how family factors influence the employability of elderly care management students, thus improving the depth and representativeness of the data.

3.3.2.3 Sample Size

It has previously been recommended that qualitative studies require a minimum sample size of at least 18 to reach data saturation (Fugard & Potts, 2015). Researchers have proposed 30 as an approximate or working number of interviews at which one could expect to reach data saturation when using a semi-structured interview approach (Morse, 2000). Sample size guidelines suggested an adequate range between 20 and 30 interviews (Creswell & Poth, 2016).

Based on this, this study selected 10 employers of elderly care institutes who knew employability of students majoring in elderly care management, 10 graduating or graduated students (2024-2025) majoring in elderly care management who having or

searching jobs in this field and corresponding family members, and 10 teachers who knew employability of students majoring in elderly care management. The total sample size of participants was 30. Data saturation was reached after interviewing approximately 22 participants.

3.3.2.4 Data Collection Method

The researcher used semi-structured interviews with 30 participants, which on average lasted about 42 minutes. With the consent of the participants, the researcher made audio recordings. In addition, the researcher used online (network teleconference) and offline (face-to-face) methods to interview the respondents. The 11 respondents (2 employers, 4 students and corresponding family members, and 5 teachers) were interviewed face-to-face, while the remaining 19 respondents (8 employers, 6 students and corresponding family members, and 5 teachers) were interviewed by using web video.

3.3.3 Data Analysis

To analyze the relatively inaccurate, scattered information from informants that appears to be relevant to the study, the researcher used the licensed software NVIVO 14, introduced by QSR International, to aid in the analysis of the collected interview data. NVivo 14 can help qualitative researchers organize, analyze, and discover insights from unstructured or qualitative data, such as interviews, open-ended survey responses, journal articles, social media, and web content (Sutopo, 2023). In addition, using coding to organize data during data analysis has become a primary method in qualitative research (Riazi et al., 2023). Reyes et al. (2024) describe coding as a process through which data are broken down into components and assigned labels. The textual data generated from the interviews are continuously coded as they are acquired. Reyes et al. (2024) argue that this approach helps prevent valuable information from being overwhelmed by the sheer volume of data. The specific steps of data analysis are described below:

Step 1: To create a new project in NVIVO. The project is titled as “Employability of the Higher Education Students Majoring in Elderly Care Management in the Context of Family Environment".

Step 2: Import the data into the NVivo system. Before importing the data, the transcribed texts were read carefully to form an initial overall idea of the information collected. 30 transcribed texts were imported, 10 of which were in the elderly care

institutes Manager's folder, 10 in the student majoring in elderly care management and corresponding family member's folder, and 10 in the teacher's folder.

Step 3: Analyzing data involves three coding levels: open, axial, and selective. From the perspective of the research process of grounded theory, data analysis is a more critical stage of grounded theory, in which coding the data step by step is an integral part of the process, from the collection of raw data to the formation of theory (Charmaz & Thornberg, 2021).

NVIVO follows a similar coding process in the form of node creation. Firstly, the data imported into NVIVO were analyzed line by line and broken into discrete parts. Free nodes were created to label them. The free nodes were named with the words or phrases consistent with the text to preserve the original discourse meaning of the source material. Then, the free nodes were checked and compared to find their similarities and dissimilarities. Finally, they were grouped into different categories according to their connections, which formed the subnodes at different levels. The last step was to create parent nodes, with which all the categories around could be unified into a core category representing the central phenomenon of the present research.

At the end of coding, through the item model analysis tool in NVIVO to present the macro picture of the nodes, i.e., to provide a more intuitive hierarchy of the influencing factors. Subsequently, the micro description of each node is continued to explain these factors in more detail.

3.4 Ethical Considerations

According to Nnaemeka and Chinwe (2022), the five ethical principles are highlighted in this study, and the following ethical issues are addressed in this study:

1) Discuss Authenticity of Data Frankly

For quantitative research, the data sources are authentic and reliable; archiving data allows for verification and reanalysis of results. In qualitative research, the interview questions were approached with a neutral attitude, avoiding assumptions or preconceived notions. The researcher was committed not to influencing participants' descriptions with personal preferences, ensuring the research results' accuracy.

2) Discuss intellectual property frankly

The researcher submitted the manuscript to the journal with the advisors' approval, and the published article has no conflicts of interest, with all parties following the ethics code.

3) Follow informed-consent rules

This involves providing all participants related to this study with comprehensive information about the study's purpose, procedures, potential risks, and benefits, ensuring they fully understand the details before voluntarily agreeing to participate. Researchers must obtain written or verbal consent, allowing all participants related to this study to ask questions and withdraw their participation at any time. Adhering to informed-consent rules is crucial for safeguarding participants' rights, ensuring research integrity, and building trust in scientific investigations.

4) Respect confidentiality and privacy

In academic research, safeguarding research participants' personal information and data is of utmost importance. Researchers are responsible for ensuring that any identifiable information remains confidential and is not disclosed to unauthorized individuals. Protecting privacy is crucial for maintaining the anonymity and security of participants' data at every stage of the research process. By respecting confidentiality and privacy, researchers uphold ethical standards, foster participant trust, and adhere to relevant data protection regulations.

5) Tap into ethics resources

The researcher carefully utilizes available ethical guidelines and expert resources to ensure the studyis conducted with unwavering ethical standards and responsibility. This involves seeking guidance from ethical committees and being prepared to address any potential issues that may arise during the study. By tapping into ethics resources, researchers can make well-informed decisions, follow best practices, and uphold the highest ethical standards throughout their research endeavors.

3.5 Conclusion

This chapter focuses on the research methodology of this study. Guided by the research philosophy of management, the study selected the pragmatic paradigm from the three main research paradigms-empirical theory, constructivist theory, and pragmatism-

based on the specific needs of the research subject and content. This chapter provides a detailed explanation of the research methods employed, including both quantitative and qualitative approaches, an introduction to the target population and sampling techniques, as well as data analysis methods. Finally, the ethical considerations followed in this study are outlined.

CHAPTER 4
RESULTS

This chapter presents the findings corresponding to the two research objectives. A total of 600 questionnaires were distributed, and data were ultimately collected from 571 students majoring in elderly care management. The quantitative findings are based on the analysis of these 571 valid responses. By analyzing these data and examining the causal relationships within the empirical model, key family environmental factors that positively influence employability were identified, thereby achieving the first research objective.

Additionally, the qualitative research findings are based on an analysis of interviews conducted with 30 respondents. Data analysis using NVivo facilitated the identification of the main family environmental factors influencing employability of the higher education students majoring in elderly care management, thus fulfilling the second research objective.

4.1 Findings of the Quantitative Research

The results of the quantitative study achieved the first research objective (RO1: to verify the relationships between family expectations, financial support, informational support, values and beliefs, and occupational identity with the employability of the higher education students majoring in elderly care management). This study used the questionnaire survey method and used IBM SPSS Statistics (Version 26.0) with license and AMOS (Version 26.0) for data analysis. The obtained data were processed with these software tools to derive the study results.

4.1.1 Descriptive Statistical Analysis

The researcher distributed 600 questionnaires, of which 571 valid responses were collected. These responses were used to describe and analyze the basic demographic characteristics of the participants. The details are shown in Table 4.1.

Table 4.1 Descriptive Statistics of Respondents (N=571)

Characteristics	Category	Frequency	Percentage (%)
Gender	Male	305	53.42%
	Female	266	46.58%
Year of Graduation	2024	291	50.96%
	2025	280	49.04%
GPA	2-3	116	20.32%
	3-4	455	79.68%
Higher Education Institutions	Hubei College of Chinese Medicine	103	18.04%
	Hubei Polytechnic Institute	27	4.73%
	Science and Technology College of Hubei University of Arts and Science	108	18.91%
	Hubei Health Vocational College	126	22.07%
	Hubei Three Gorges Polytechnic College	40	7.01%
	Xianning Vocational Technical College	28	4.90%
	Wuhan Social Work Professional College	27	4.73%
	Huanggang Polytechnic College	24	4.20%
	Ezhou Polytechnic College	23	4.03%
	Huanggang Vocational College of Science and Technology	65	11.38%

4.1.2 Variable Description Statistical Analysis

A seven-point scale was used in this study. Variable description statistical analysis results show that the mean value of each variable is between 3.5~4, which reflects that the family expectations, financial support, informational support, values & beliefs,

occupational identity, and employability of elderly care management students are at the upper-middle level (mean＞3). As shown in Table 4.2.

Table 4.2 Variable Description Statistical Analysis

Variables	Samples	Mean
Family expectations	571	4.016
Financial support	571	4.055
Informational support	571	4.064
Values & beliefs	571	4.381
Occupational identity	571	4.080
Employability	571	4.028

4.1.3 Reliability and Validity Analysis

Cronbach's Alpha reliability coefficient is used to assess the internal consistency of a questionnaire's research variables across each measurement item. Cronbach's Alpha coefficient must be greater than 0.7 to have good reliability (DeVellis & Thorpe, 2021). There are 6 variables in this study, which are family expectations, financial support, informational support, values & beliefs, occupational identity, and employability. The reliability analysis of the variables is carried out, and the measurement results are shown in Table 4.3.

Table 4.3 Reliability Analysis of Each Variables

Variable	Cronbach's Alpha	Cronbach's Alpha after standardization	number of items
Family expectations	0.87	0.87	6
Financial support	0.883	0.883	5
Informational support	0.921	0.922	8
Values and beliefs	0.881	0.881	3
Occupational identity	0.941	0.942	13
Employability	0.888	0.888	3

It can be seen from Table 4.4 that the Kaiser Meyer Olkin (KMO) value is 0.931, which is bigger than 0.6, and Bartlett's test of sphericity shows the Sig is 0.000, which is smaller than 0.001, indicating that the questionnaire is of a good validity and is suitable for factor analysis.

Table 4.4 KMO and Bartlett's Test of This Study

Kaiser-Meyer-Olkin measure of sampling adequacy		0.931
Bartlett's test of sphericity	Approx. Chi-Square	12643.856
	Df	703
	Sig.	0.000

4.1.4 Confirmatory Factor Analysis

In addition, CFA is a confirmatory technique that tests the fit of a pre-specified factor model to the observed data. CFA can provide evidence for the validity of the theoretical model by determining whether the hypothesized model fits the data well (Baharum et al., 2023). In the model fitting test, the model fitting degree was determined by the results of indicators including CMIN/DF, RMSEA, SRMR, GFI, AGFI, NFI, IFI, TLI and CFI, referring to the standard value interval.

4.1.4.1 Confirmatory Factor Analysis Model of Family Expectations

Family expectations have 1 dimension and 6 measurement items. After confirmatory factor analysis, Figure 4.1, Table 4.5 and Table 4.6 were obtained.

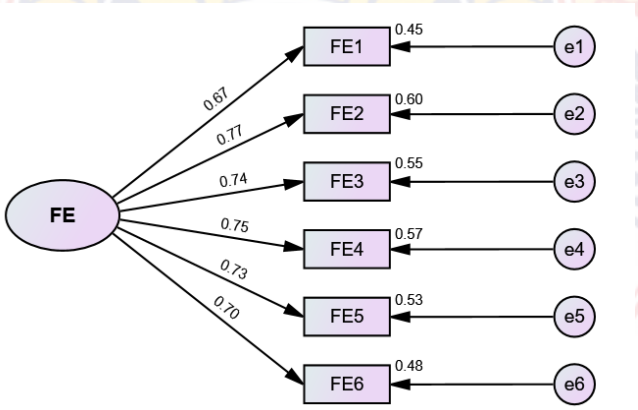

Figure 4.1 Confirmatory Factor Analysis Model of Family Expectations

Note: FE=family expectations.

According to the fit indices recommended by Fornell and Larcker (1981) for structural equation modeling, the results of the confirmatory factor analysis (CFA) for the measurement model of family expectations indicate satisfactory fit indices. CMIN/DF is 1.158, which is less than 3, root mean squared error of approximation (RMSEA) is 0.017, and standardized root mean square residual (SRMR) is 0.015, which is less than 0.08. Goodness-of-fit index (GFI), adjusted goodness-of-fit index (AGFI), normed fit index (NFI), incremental fit index (IFI), Tucker-Lewis Index (TLI), and comparative fit index (CFI) all reach the standard of 0.9, Each fitting index conforms to the general research standards, so it can be considered that the model has a good fit. As shown in Table 4.5 Model Fit Index of Family Expectations.

Table 4.5 Model Fit Index of Family Expectations

Fit index	Standard	Value	Fitting situation
CMIN	——	10.405	——
DF	——	9	——
CMIN/DF	<3	1.156	Good
RMSEA	<0.08	0.017	Good
SRMR	<0.08	0.0145	Good
GFI	>0.9	0.994	Good
AGFI	>0.9	0.985	Good
NFI	>0.9	0.993	Good
IFI	>0.9	0.999	Good
TLI	>0.9	0.998	Good
CFI	>0.9	0.999	Good

Table 4.6 Convergent Validity and Composite Reliability Analysis of Family Expectations shows that the standardized factor loadings of each item are greater than 0.6, the composite reliability (CR) is greater than 0.7, and the average variation extraction (AVE) is greater than 0.5, Therefore, the scales demonstrate good convergent validity and composite reliability.

Table 4.6 Convergent Validity and Composite Reliability Analysis of Family Expectations

Variables	Items	Factor loading	CR	AVE	Cronbach's Alpha after standardization
Family expectations	FE1	0.668	0.870	0.528	0.87
	FE2	0.774			
	FE3	0.740			
	FE4	0.752			
	FE5	0.726			
	FE6	0.696			

Note: AVE= average variance extracted, CR= composite reliability

4.1.4.2 Confirmatory Factor Analysis Model of Financial Support

Financial support have 1 dimension and 5 measurement items. After confirmatory factor analysis, Figure 4.2, Table 4.7, and Table 4.8 were obtained.

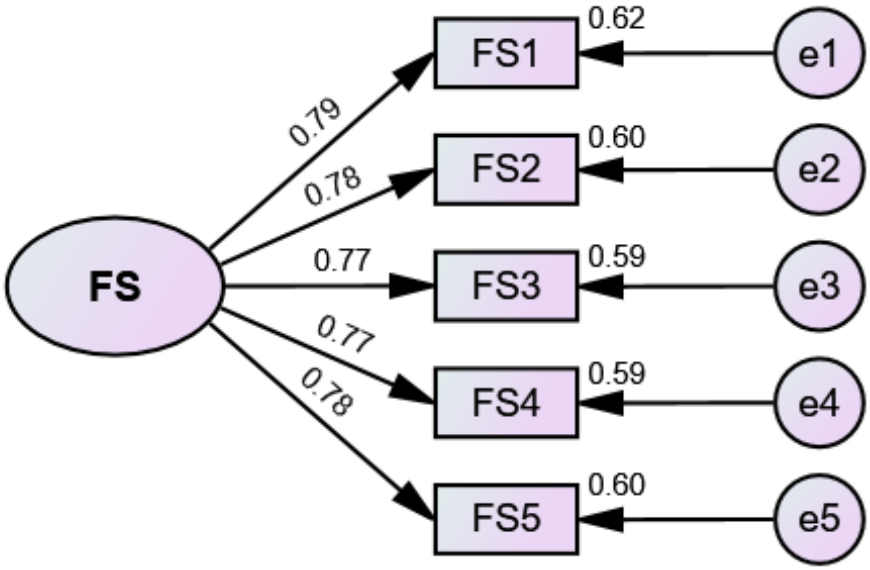

Figure 4.2 Confirmatory Factor Analysis Model of Financial Support

Note: FS=financial support.

According to the fit indices recommended by Fornell and Larcker (1981) for structural equation modeling, the results of the confirmatory factor analysis (CFA) for the measurement model of financial support (consisting of the five measurement items) indicate satisfactory fit indices. CMIN/DF is 1.605, which is less than 3, root mean squared error of approximation (RMSEA) is 0.033, and standardized root mean square residual

(SRMR) is 0.012, which is less than 0.08. Goodness-of-fit index (GFI), adjusted goodness-of-fit index (AGFI), normed fit index (NFI), incremental fit index (IFI), Tucker-Lewis Index (TLI), and comparative fit index (CFI) all reach the standard of 0.9, Each fitting index conforms to the general research standards, so it can be considered that the model has a good fit. As shown in Table 4.7 Model Fit Index of Financial Support.

Table 4.7 Model Fit Index of Financial Support

Fit index	Standard	Value	Fitting situation
CMIN	——	8.009	——
DF	——	5	——
CMIN/DF	<3	1.602	Good
RMSEA	<0.08	0.032	Good
SRMR	<0.08	0.0125	Good
GFI	>0.9	0.994	Good
AGFI	>0.9	0.983	Good
NFI	>0.9	0.994	Good
IFI	>0.9	0.998	Good
TLI	>0.9	0.996	Good
CFI	>0.9	0.998	Good

Table 4.8 Convergent Validity and Composite Reliability Analysis of Financial Support shows that the standardized factor loadings of each item are greater than 0.6, the composite reliability (CR) is greater than 0.7, and the average variation extraction (AVE) is greater than 0.5, Therefore, the scales demonstrate good convergent validity and composite reliability.

Table 4.8 Convergent Validity and Composite Reliability Analysis of Financial Support

Variables	Items	Factor loading	CR	AVE	Cronbach's Alpha after standardization
Financial support	FS1	0.789	0.883	0.601	0.883
	FS2	0.775			
	FS3	0.769			
	FS4	0.767			
	FS5	0.776			

Note: AVE= average variance extracted, CR= composite reliability

4.1.4.3 Confirmatory Factor Analysis Model of Informational Support

Informational support has 1 dimension and 8 measurement items. After confirmatory factor analysis, Figure 4.3, Table 4.9, and Table 4.10 were obtained.

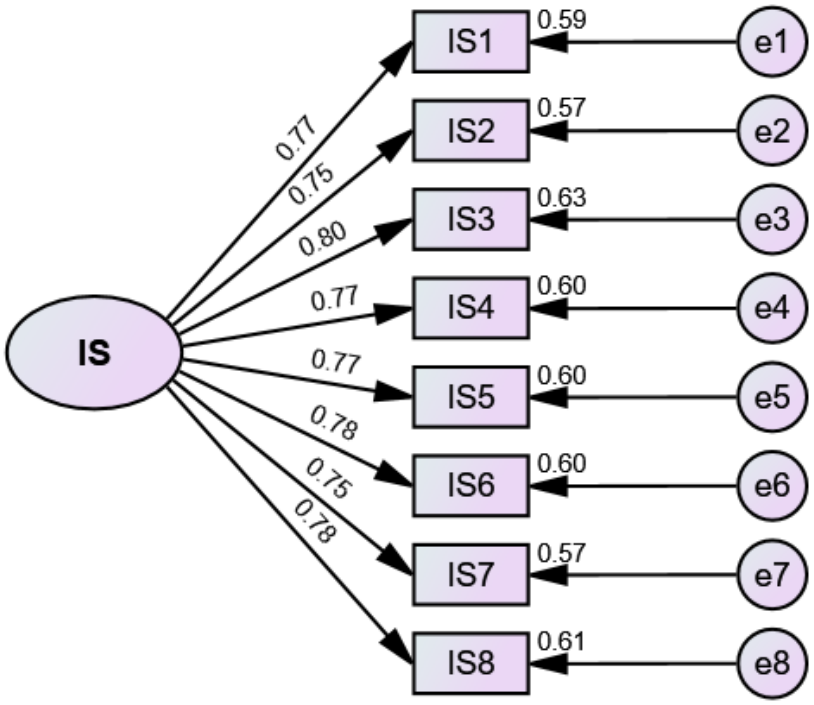

Figure 4.3 Confirmatory Factor Analysis Model of Informational Support

Note: IS=informational support.

According to the fit indices recommended by Fornell and Larcker (1981) for structural equation modeling, the results of the confirmatory factor analysis (CFA) for the measurement model of informational support indicate satisfactory fit indices. CMIN/DF

is 1.514, which is less than 3, root mean squared error of approximation (RMSEA) is 0.03, and standardized root mean square residual (SRMR) is 0.015, which is less than 0.08. Goodness-of-fit index (GFI), adjusted goodness-of-fit index (AGFI), normed fit index (NFI), incremental fit index (IFI), Tucker-Lewis Index (TLI), and comparative fit index (CFI) all reach the standard of 0.9, Each fitting index conforms to the general research standards, so it can be considered that the model has a good fit. As shown in Table 4.9 Model Fit Index of Informational Support.

Table 4.9 Model Fit Index of Informational Support

Fit index	Standard	Value	Fitting situation
CMIN	——	30.217	——
DF	——	20	——
CMIN/DF	<3	1.511	Good
RMSEA	<0.08	0.030	Good
SRMR	<0.08	0.0151	Good
GFI	>0.9	0.988	Good
AGFI	>0.9	0.978	Good
NFI	>0.9	0.989	Good
IFI	>0.9	0.996	Good
TLI	>0.9	0.995	Good
CFI	>0.9	0.996	Good

Table 4.10 Convergent Validity and Composite Reliability Analysis of Informational Support shows that the standardized factor loadings of each item are greater than 0.6, the composite reliability (CR) is greater than 0.7, and the average variation extraction (AVE) is greater than 0.5, Therefore, the scales demonstrate good convergent validity and composite reliability.

Table 4.10 Convergent Validity and Composite Reliability Analysis of Informational Support

Variables	Items	Factor loading	CR	AVE	Cronbach's Alpha after standardization
Informational support	IS1	0.765	0.922	0.595	0.922
	IS2	0.754			
	IS3	0.796			
	IS4	0.773			
	IS5	0.773			
	IS6	0.777			
	IS7	0.752			
	IS8	0.779			

Note: AVE= average variance extracted, CR= composite reliability

4.1.4.4 Confirmatory Factor Analysis Model of Values & Beliefs

Values & beliefs has 1 dimension and 3 measurement items. After confirmatory factor analysis, Figure 4.4, Table 4.11, and Table 4.12 were obtained.

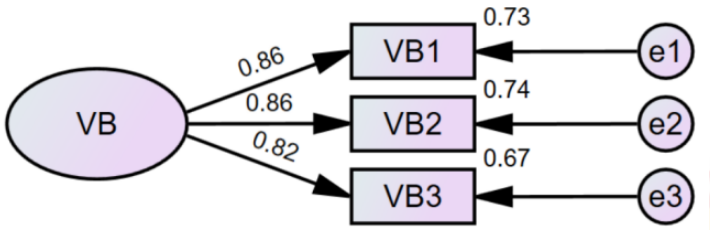

Figure 4.4 Confirmatory Factor Analysis Model of Values & Beliefs
Note: VB=Values & Beliefs.

According to the fit indices recommended by Fornell and Larcker (1981) for structural equation modeling, the results of the confirmatory factor analysis (CFA) for the measurement model of values & beliefs indicate satisfactory fit indices. CMIN/DF is 2.181, which is less than 3, root mean squared error of approximation (RMSEA) is 0.046, and standardized root mean square residual (SRMR) is 0.007, which is less than 0.08. Goodness-of-fit index (GFI), adjusted goodness-of-fit index (AGFI), normed fit index (NFI), incremental fit index (IFI), Tucker-Lewis Index (TLI), and comparative fit index (CFI) all reach the standard of 0.9, Each fitting index conforms to the general research

standards, so it can be considered that the model has a good fit. As shown in Table 4.11 Model Fit Index of Values & Beliefs.

Table 4.11 Model Fit Index of Values & Beliefs

Fit index	Standard	Value	Fitting situation
CMIN	——	2.181	——
DF	——	1	——
CMIN/DF	<3	2.181	Good
RMSEA	<0.08	0.046	Good
SRMR	<0.08	0.0066	Good
GFI	>0.9	0.997	Good
AGFI	>0.9	0.985	Good
NFI	>0.9	0.998	Good
IFI	>0.9	0.999	Good
TLI	>0.9	0.996	Good
CFI	>0.9	0.999	Good

Table 4.12 Convergent Validity and Composite Reliability Analysis of Values & Beliefs shows that the standardized factor loadings of each item are greater than 0.6, the composite reliability (CR) is greater than 0.7, and the average variation extraction (AVE) is greater than 0.5, Therefore, the scales demonstrate good convergent validity and composite reliability.

Table 4.12 Convergent Validity and Composite Reliability Analysis of Values & Beliefs

Variables	Items	Factor loading	CR	AVE	Cronbach's Alpha after standardization
Values & beliefs	VB1	0.855	0.882	0.713	0.881
	VB2	0.859			
	VB3	0.818			

Note: AVE= average variance extracted, CR= composite reliability

4.1.4.5 Confirmatory Factor Analysis Model of Occupational Identity

Occupational identity has 1 dimension and 13 measurement items. After confirmatory factor analysis, Figure 4.5, Table 4.13 and Table 4.14 were obtained.

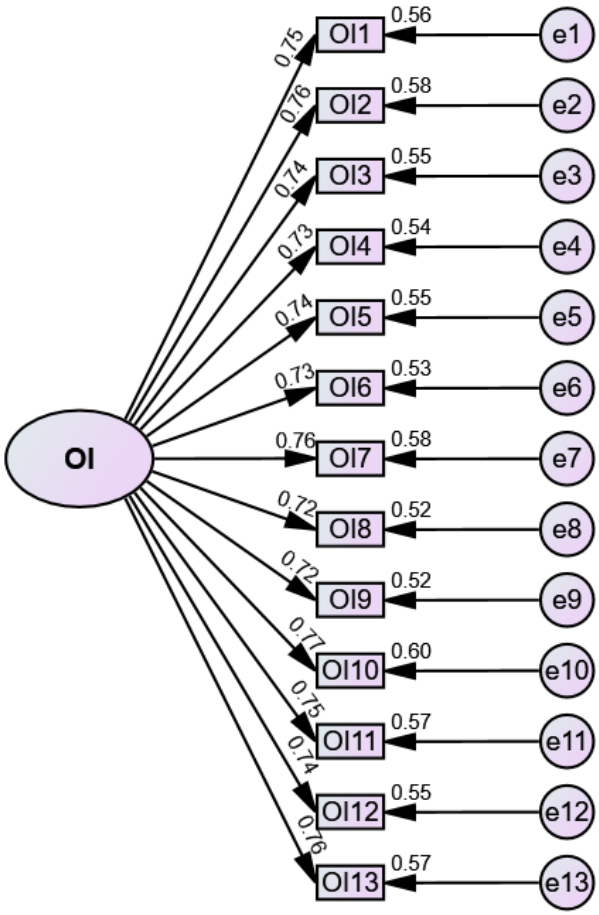

Figure 4.5 Confirmatory Factor Analysis Model of Occupational Identity

Note: OI=occupational identity.

According to the fit indices recommended by Fornell and Larcker (1981) for structural equation modeling, the results of the confirmatory factor analysis (CFA) for the measurement model of occupational identity indicate satisfactory fit indices. CMIN/DF is 2.755, which is less than 3, root mean squared error of approximation (RMSEA) is 0.055, and standardized root mean square residual (SRMR) is 0.026, which is less than 0.08. Goodness-of-fit index (GFI), adjusted goodness-of-fit index (AGFI), normed fit index (NFI), incremental fit index (IFI), Tucker-Lewis Index (TLI), and comparative fit index (CFI) all reach the standard of 0.9, Each fitting index conforms to the general research

standards, so it can be considered that the model has a good fit. As shown in Table 4.13 Model Fit Index of Occupational Identity.

Table 4.13 Model Fit Index of Occupational Identity

Fit index	Standard	Value	Fitting situation
CMIN	——	178.772	——
DF	——	65	——
CMIN/DF	<3	2.750	Good
RMSEA	<0.08	0.055	Good
SRMR	<0.08	0.0264	Good
GFI	>0.9	0.953	Good
AGFI	>0.9	0.934	Good
NFI	>0.9	0.961	Good
IFI	>0.9	0.975	Good
TLI	>0.9	0.970	Good
CFI	>0.9	0.975	Good

Table 4.14 Convergent Validity and Composite Reliability Analysis of Occupational Identity shows that the standardized factor loadings of each item are greater than 0.6, the composite reliability (CR) is greater than 0.7, and the average variation extraction (AVE) is greater than 0.5, Therefore, the scales demonstrate good convergent validity and composite reliability.

Table 4.14 Convergent Validity and Composite Reliability Analysis of Occupational Identity

Variables	Items	Factor loading	CR	AVE	Cronbach's Alpha after standardization
Occupational identity	OI1	0.749	0.942	0.555	0.942
	OI2	0.759			
	OI3	0.744			
	OI4	0.732			

Table 4.14 (continued)

Variables	Items	Factor loading	CR	AVE	Cronbach's Alpha after standardization
	OI5	0.739			
	OI6	0.729			
	OI7	0.762			
	OI8	0.721			
	OI9	0.721			
	OI10	0.771			
	OI11	0.755			
	OI12	0.743			
	OI13	0.758			

Note: AVE= average variance extracted, CR= composite reliability

4.1.4.6 Confirmatory Factor Analysis Model of Employability

Employability has 1 dimension and 3 measurement items. After confirmatory factor analysis, Figure 4.6, Table 4.15 and Table 4.16 were obtained.

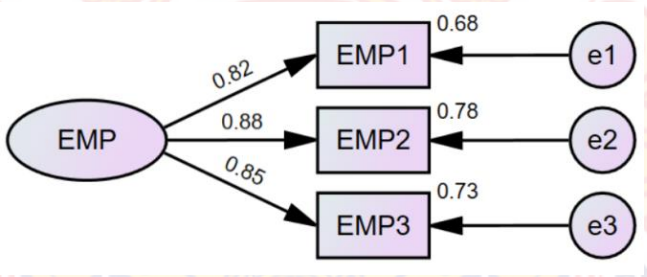

Figure 4.6 Confirmatory Factor Analysis Model of Employability
Note: EMP is employability

According to the fit indices recommended by Fornell and Larcker (1981) for structural equation modeling, the results of the confirmatory factor analysis (CFA) for the measurement model of employability (consisting of the three measurement items) indicate satisfactory fit indices. CMIN/DF is 2.532, which is less than 3, root mean squared error of approximation (RMSEA) is 0.052, and standardized root mean square residual (SRMR) is 0.0097, which is less than 0.08. Goodness-of-fit index (GFI), adjusted goodness-of-fit index (AGFI), normed fit index (NFI), incremental fit index (IFI), Tucker-Lewis Index

(TLI), and comparative fit index (CFI) all reach the standard of 0.9, Each fitting index conforms to the general research standards, so it can be considered that the model has a good fit. As shown in Table 4.15 Model Fit Index of Employability.

Table 4.15 Model Fit Index of Employability

Fit index	Standard	Value	Fitting situation
CMIN	——	5.063	——
DF	——	2	——
CMIN/DF	<3	2.532	Good
RMSEA	<0.08	0.052	Good
SRMR	<0.08	0.0097	Good
GFI	>0.9	0.994	Good
AGFI	>0.9	0.983	Good
NFI	>0.9	0.995	Good
IFI	>0.9	0.997	Good
TLI	>0.9	0.995	Good
CFI	>0.9	0.997	Good

Table 4.16 Convergent Validity and Composite Reliability Analysis of Employability shows that the standardized factor loadings of each item are greater than 0.6, the composite reliability (CR) is greater than 0.7, and the average variation extraction (AVE) is greater than 0.5, Therefore, the scales demonstrate good convergent validity and composite reliability.

Table 4.16 Convergent Validity and Composite Reliability Analysis of Employability

Variables	Items	Factor loading	CR	AVE	Cronbach's Alpha after standardization
Employability	EMP1	0.825	0.890	0.729	0.888
	EMP2	0.881			
	EMP3	0.854			

Note: AVE= average variance extracted, CR= composite reliability

4.1.5 Pearson Correlation and Discriminant Validity Analysis

On the basis of Pearson correlation analysis indicates the existence of a significant correlation among the variable, and the results of the AVE square root value is greater than the criteria for evaluating the validity of the difference (Fornell and Larcker, 1981).

As shown in Table 4.17, for family expectations, the square root of its AVE is 0.727, which is greater than the maximum absolute value of the inter-factor correlation (0.266). For financial support, the square root of its AVE is 0.775, which exceeds the maximum absolute value of the inter-factor correlation (0.288). For informational support, the square root of its AVE is 0.771, which is greater than the maximum absolute value of the inter-factor correlation (0.276). For values and beliefs, the square root of its AVE is 0.844, which exceeds the maximum absolute value of the inter-factor correlation (0.304). For career identity, the square root of its AVE is 0.745, which is greater than the maximum absolute value of the inter-factor correlation (0.314). For employability, the square root of its AVE is 0.854, which exceeds the maximum absolute value of the inter-factor correlation (0.314). Therefore, the above results indicate that any two variables exhibit good discriminant validity.

Table 4.17 Pearson Correlation and Discriminant Validity Analysis

Variable	SD	FE	FS	IS	VB	OI	EMP
FE	1.168	**0.727**					
FS	1.027	0.099*	**0.775**				
IS	1.055	0.167**	0.215**	**0.771**			
VB	1.439	0.168**	0.200**	0.255**	**0.844**		
OI	1.264	0.266**	0.229**	0.233**	0.257**	**0.745**	
EMP	1.305	0.242**	0.288**	0.276**	0.304**	0.314**	**0.854**

Note: Bolded fonts represent AVE square root values, while non-bold fonts indicate correlation coefficients between pairs of variables. Correlation is significant at the 0.01 level (two-tailed) (**), and at the 0.05 level (two-tailed) (*). FE=family expectations; FS=financial support; IS=informational support; VB=values & beliefs; OI=occupational identity; EMP=employability. SD= standard deviation

4.1.6 Common Methodology Bias

In survey research, common method bias (CMB) may inflate the collected data (Podsakoff et al., 2003). If the variance explained by a single factor from unrotated exploratory factor analysis is less than 40%, the CMB is not severe (Wu et al., 2025). In this study, the first factor accounts for 26.614% of the variance, well below the 40% threshold, indicating that CMB is not a concern for the sample data.

Table 4.18 Total Variance Explained

Variable	Number of items	Initial Eigenvalues （% of Variance）
Family expectations	6	26.614
Financial support	5	12.303
Informational support	8	8.476
Values and beliefs	3	8.056
Occupational identity	13	5.603
Employability	3	4.431

4.1.7 Hypotheses Test

4.1.7.1 Path Analysis of Structural Equation Model

Before the path analysis, it is necessary to check the fitting index of the structural equation model, and the study used the same method as the confirmatory factor model fitting index. CMIN/DF is 1.439, which is less than 3, root mean squared error of approximation (RMSEA) is 0.028, and standardized root mean square residual (SRMR) is 0.0798, which is less than 0.08. Goodness-of-fit index (GFI), adjusted goodness-of-fit index (AGFI), normed fit index (NFI), incremental fit index (IFI), Tucker-Lewis Index (TLI), and comparative fit index (CFI) all reach the standard of 0.9, Each fitting index conforms to the general research standards, so it can be considered that the model has a good fit. As shown in Table 4.19.

Table 4.19 The Fitting Indicators of the Structural Equation Model

Fit index	Standard	Value	Fitting situation
CMIN	——	944.141	——
DF	——	656	——
CMIN/DF	<3	1.439	Good
RMSEA	<0.08	0.028	Good
SRMR	<0.08	0.0798	Good
GFI	>0.9	0.919	Good
AGFI	>0.9	0.908	Good
NFI	>0.9	0.927	Good
IFI	>0.9	0.977	Good
TLI	>0.9	0.975	Good
CFI	>0.9	0.976	Good

Table 4.20 Results of Structural Model Testing showed that family expectations significantly affects employability (β = 0.15, p=0.001), so hypothesis 1 is supported. Financial support significantly affects employability (β = 0.205, p<0.001), so hypothesis 2 is supported. Informational support significantly affects employability (β = 0.16, p<0.001), so hypothesis 3 is supported. Values & beliefs significantly affects employability (β = 0.193, p<0.001), so hypothesis 4 is supported. Occupational identity significantly affects employability (β = 0.172, p<0.001), so hypothesis 5 is supported. Family expectations significantly affects occupational identity (β =0.23, p<0.001), so hypothesis 6 is supported. Financial support significantly affects occupational identity (β =0.167, p<0.001), so hypothesis 7 is supported. Informational support significantly affects occupational identity (β =0.138, p=0.001), so hypothesis 8 is supported. Values & beliefs significantly affects occupational identity (β =0.186, p<0.001), so hypothesis 9 is supported.

Table 4.20 Results of Structural Model Testing

Hypothesis	Model Path	β-value	SE	CR	P- value	Test results
H1	FE→EMP	0.150	0.052	3.273	=0.001	Supported
H2	FS→EMP	0.205	0.055	4.556	<0.001	Supported
H3	IS→EMP	0.160	0.048	3.691	<0.001	Supported
H4	VB→EMP	0.193	0.040	4.286	<0.001	Supported
H5	OI→EMP	0.172	0.049	3.689	<0.001	Supported
H6	FE→OI	0.230	0.050	5.039	<0.001	Supported
H7	FS→OI	0.167	0.051	3.774	<0.001	Supported
H8	IS→OI	0.138	0.045	3.214	=0.001	Supported
H9	VB→OI	0.186	0.038	4.195	<0.001	Supported

Note: FE=family expectations; FS=financial support; IS=informational support; VB=values & beliefs; OI=occupational identity; EMP=employability.

4.1.7.2 Mediating Effect Test of Occupational Identity

In the AMOS, this study chose the Bootstrap technique, used 5000 subsamples, and numbered each path, including (a1-a4)*b and c'(c1'-c4'). It examined the mediating role of occupational identity in the influence of family expectations, financial support, informational support, values & beliefs on employability.

In the relationship between family expectations and employability, indirect effects of occupational identity (β = 0.045, p=0.001) is significant. Among them, the 95% confidence interval [0.019, 0.081] of indirect effects does not contain 0, indicating that the indirect effect is significant, so employability is affected by family expectations through occupational identity. Therefore, H6a is supported.

In the relationship between financial support and employability, indirect effects of occupational identity (β = 0.035, p=0.001) is significant. Among them, the 95% confidence interval [0.013, 0.068] of indirect effects does not contain 0, indicating that the indirect effect is significant, so employability is affected by financial support through occupational identity. Therefore, H7a is supported.

In the relationship between informational support and employability, indirect effects of occupational identity (β = 0.026, p<0.01) is significant. Among them, the 95% confidence interval [0.009, 0.053] of indirect effects does not contain 0, indicating that the

indirect effect is significant, so employability is affected by informational support through occupational identity. Therefore, H8a is supported.

In the relationship between values & beliefs and employability, indirect effects of occupational identity (β = 0.029, p=0.001) is significant. Among them, the 95% confidence interval [0.011, 0.056] of indirect effects does not contain 0, indicating that the indirect effect is significant, so employability is affected by values & beliefs through occupational identity. Therefore, H9a is supported. All results are shown in Table 4.21.

Table 4.21 Bootstrap Analysis of Mediating Effect Significance Test

Hypothesis	Model Path	Indirect effect	P-value	Boot LLCI	Boot ULCI	Test results
H6a	FE→OI→EMP	0.045	=0.001	0.019	0.081	Supported
H7a	FS→OI→EMP	0.035	=0.001	0.013	0.068	Supported
H8a	IS→OI→EMP	0.026	<0.01	0.009	0.053	Supported
H9a	VB→OI→EMP	0.029	=0.001	0.011	0.056	Supported

Note: FE=family expectations; FS=financial support; IS=informational support; VB=values & beliefs; OI=occupational identity; EMP=employability.

The path analysis for the model in this study is shown in Figure 4.7.

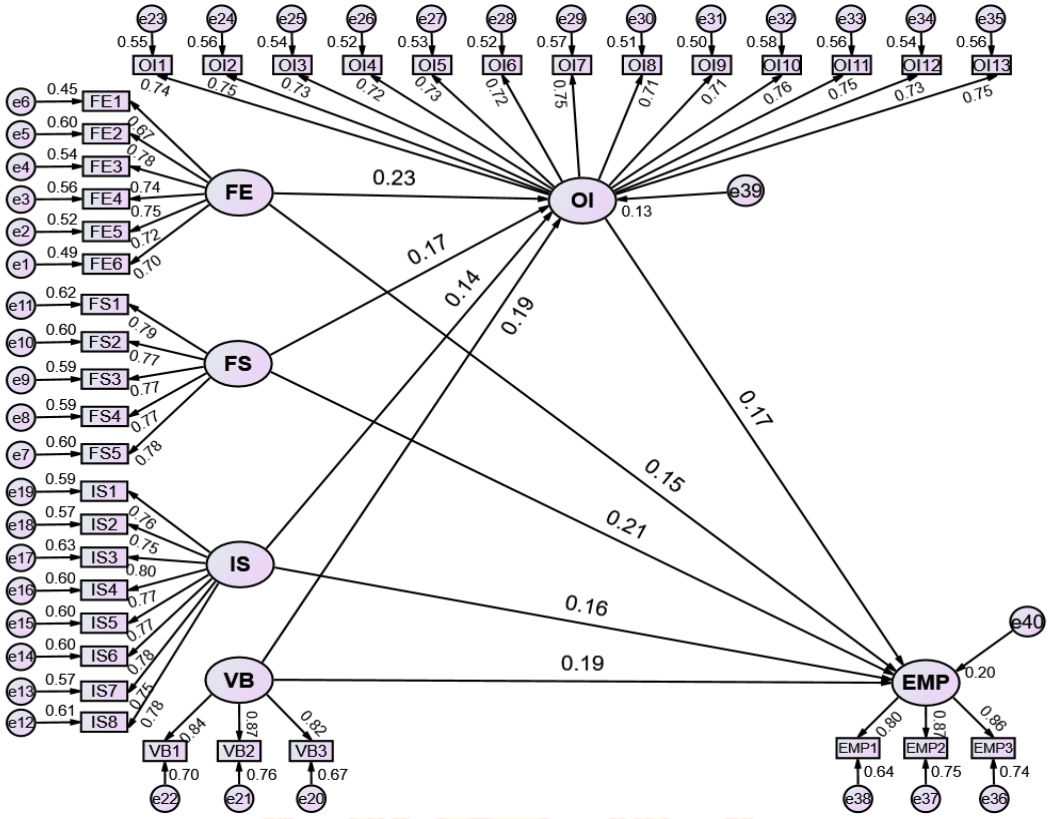

Figure 4.7 Path Analysis for the Model

Note: FE=family expectations; FS=financial support; IS=informational support; VB=values & beliefs; OI=occupational identity; EMP=employability.

Based on the above hypothesis verification process, the hypothesis verification results are shown in Table 4.22 below.

Table 4.22 Summary of Testing Hypotheses by This Study

No.	Research hypotheses	Results
H1	Family expectations will positively influence the employability of higher education students majoring in elderly care management.	Supported
H2	Financial support will positively influence the employability of higher education students majoring in elderly care management.	Supported
H3	Informational support will positively influence the employability of higher education students majoring in elderly care management.	Supported

Table 4.22 (continued)

No.	Research hypotheses	Results
H4	Values and beliefs will positively influence the employability of higher education students majoring in elderly care management.	Supported
H5	Occupational identity will positively influence the employability of higher education students majoring in elderly care management.	Supported
H6	Family expectations will positively influence the occupational identity of higher education students majoring in elderly care management.	Supported
H6a	Occupational identity will mediate the relationship between family expectations and employability of higher education students majoring in elderly care management.	Supported
H7	Financial support will positively influence the occupational identity of higher education students majoring in elderly care management.	Supported
H7a	Occupational identity will mediate the relationship between financial support and employability of higher education students majoring in elderly care management.	Supported
H8	Informational support will positively influence the occupational identity of higher education students majoring in elderly care management.	Supported
H8a	Occupational identity will mediate the relationship between informational support and employability of higher education students majoring in elderly care management.	Supported
H9	Values and beliefs will positively influence the occupational identity of higher education students majoring in elderly care management.	Supported
H9a	Occupational identity will mediate the relationship between values and beliefs and employability of higher education students majoring in elderly care management.	Supported

4.2 Findings of the Qualitative Research

This study analyzed the interview data through Nvivo software to reach the RO2: to identify the main family environmental factors influencing employability of the higher education students majoring in elderly care management.

4.2.1 Descriptive Statistics of Respondents

This study conducted semi-structured interviews with 30 respondents, including 10 employers of elderly care institutes who knew employability of students majoring in elderly care management, 10 teachers who knew employability of students majoring in elderly care management, and 10 graduating or graduated students (2024-2025) majoring in elderly care management who having or searching jobs in this field and corresponding family members. Detailed information is shown in Table 4.23.

Table 4.23 Code for Employers, Teachers, Students and Corresponding Family Members

Elderly Care Institutions *(Selected employers from)*	**Employer Code**	**High education institutions offering elderly care management majors in Hubei** *(Selected teachers, students and corresponding family members from)*	**Teacher Code**	**Student and Corresponding Family Member Code**
1) Social Welfare Institution of Wuhan	E1	1) Hubei College of Chinese Medicine	T1	SF1
2) Taikang Elderly Care Institution of Wuhan	E2	2) Hubei Polytechnic Institute	T2	SF2
3) Social Welfare Social Welfare Institution of Wuhan Hanyang District	E3	3) Science and Technology College of Hubei University of Arts and Science	T3	SF3

Table 4.23 (continued)

Elderly Care Institutions *(Selected employers from)*	**Employer Code**	**High education institutions offering elderly care management majors in Hubei** *(Selected teachers, students and corresponding family members from)*	**Teacher Code**	**Student and Corresponding Family Member Code**
4) Social Welfare Social Welfare Institution of Wuhan Jianghan District	E4	4) Hubei Health Vocational College	T4	SF4
5) Social Welfare Institution of Xiaogan	E5	5) Hubei Three Gorges Polytechnic College	T5	SF5
6) Social Welfare Institution of Huangshi	E6	6) Xianning Vocational Technical College	T6	SF6
7) Sunshine Welfare Institution of Guangshui	E7	7) Wuhan Social Work Professional College	T7	SF7
8) Zhaoshang Guanyi Elderly Care Institution of Wuhan Hanyang District	E8	8) Huanggang Polytechnic College	T8	SF8
9) Social Welfare Institution of Jiangling	E9	9) Ezhou Polytechnic College	T9	SF9
10. Elderly Care Service Center of Wuhan Qiaokou District Yijia Street	E10	10) Huanggang Vocational College of Science and Technology	T10	SF10

4.2.2 Open Coding Analysis

Open coding is the initial phase of data analysis, where concepts, attributes, and categories discovered in the data are gradually refined and defined. In this study, manual coding was used to process the data. Textual data was analyzed sentence by sentence, extracting accurate and valuable concepts and further categorizing them into categories. Through careful and iterative comparative analysis, 41 effective concepts and 23 scopes were identified. Table 4.24 provides examples of the open coding process using selected samples, while the categorization analysis results of the sample data are shown in Table 4.24.

Table 4.24 Open Coding Process

Scope	Effective concepts	Representative Original Statements
1) Gender-Job Fit	Gender suitability in specific roles	*"In elderly care management, women often take on care giving roles while men handle logistics, but both genders should be given equal chances based on abilities rather than stereotypes." (E2)*
	Equal opportunity irrespective of gender	*"Men and women each have their own strengths in the workplace. We recognize that male caregivers often excel in management and handling the physical demands and unexpected situations in senior care, while female caregivers tend to be more detail-oriented and excel at forging strong emotional connections-though they may also be more susceptible to external factors that affect their mood."(E2)*
2) Age-Job Fit	Age appropriateness for certain positions	*"Young graduates are energetic and adapt quickly to technology, but older employees offer valuable life experience in managing elderly care services." (E4)*
	Challenges faced by older employees	*"Some senior staff struggle with new digital record-keeping systems, which can slow down daily operations." (T3)*
	Youth preference in job recruitment	*"I see both the upsides and downsides of hiring younger caregivers. On one hand, they bring a lot of fresh energy and new ideas that really help brighten our residents' day. On the other hand, they might not yet have the deep empathy or life experience that older caregivers naturally bring to the table."(E9)*

Table 4.24 (continued)

Scope	Effective concepts	Representative Original Statements
3) Personality -Job Fit	Matching personality traits with job requirements	*"Empathy, patience, and communication skills are essential for students entering elderly care management roles." (T1)*
	Tolerance for social prejudice	*"I know some people think that working in elderly care is a low-status job, but I don't really mind. My family has always supported me in doing what I love." (E6)*
4) Companionship and Emotional Support	Companionship and emotional support	*"It is convenient for employees to be with and provide emotional support to their elderly parents, especially if they work in the same facility where their parents live."(E2)*
5) Medical and Health Care	Medical and health care	*"We hope that our child, by working in the elderly care industry, can offer us more convenient access to senior health care and support, benefiting from the resources and expertise gained from their profession."（SF10）*
6) Time Balance	Flexible working hours	*"Many people think joining the senior care industry means sacrificing personal time, but in reality, we prioritize flexible hours so you can be there for your family."(E7)*
7) Role Conflict Management	Juggling family and work	*"After working in the senior care industry, balancing family and work is like playing the role of a caregiver both at home and on the job-it's not conflicting; in fact, it sometimes helps workers see challenges at work from a fresh perspective."(T9)*
8) Parental educational investment	Tuition	*Most parents of our students are very supportive of the students' education; even in very poor families, they have never been stingy when it comes to paying for the students' tuition.（T1）*

Table 4.24 (continued)

Scope	Effective concepts	Representative Original Statements
	Learning resources and equipment	*"My parents provide me with better learning tools, including a high-performance laptop for online classes, a smart pen and tablet for note-taking, and a printer for printing study materials. These tools help me focused on my studies."(SF2)*
9) Family living assistance	Support for housing and transportation during internships	*"Some internship organizations are unable to provide accommodation, so family members offer support with housing and transportation during the internship period, helping to improve the retention rate after the internship."(T2)*
	Meeting basic living needs	*"Before my job stabilized after graduation, my parents supported me in working in the elderly care industry and continuously provided me with living financial assistance in my daily life."(SF3)*
10) Soft skills investment	Problem-solving	*My parents will provide extra financial support during the winter and summer holiday to help me improve my problem-solving skills because they believe that working with seniors involves handling all kinds of unexpected challenges, from health emergencies to emotional support.(SF1)*
	Communication skills	*"We encourage to actively improve students communication skills outside of university courses, because in elderly care facilities, we often need to handle situations like communicating with residents' families, and addressing residents' emotional needs. Strong communication skills make it much easier."(E1)*
11) Hard skills investment	Chronic Disease Management	*"Knowing how to care for chronic illnesses like hypertension, diabetes, and Alzheimer's can really help students find better jobs in the future."(T4)*
	Rehabilitation Care	*"I think it's beneficial for students to invest in skill-related certifications, like dementia care courses, before graduation. It enhances their rehabilitation care ability." (E10)*

Table 4.24 (continued)

Scope	Effective concepts	Representative Original Statements
12) Market Dynamics and Innovations	Awareness of industry employment trends	*"I'm always keeping a close eye on the hiring needs and development trends in the senior care industry."(SF5)*
	Adaptation to technological changes in elderly care	*"We expect students to be able to use common technologies in elderly care, like patient monitoring devices, electronic health record systems, and mobility aids."(E1)*
13) Policy and Regulatory Updates	Awareness of industry regulations	*"All students are required to understand legal obligations related to patient privacy and care standards, and these obligations need to be upheld in their family lives." (T6)*
	Compliance awareness in care giving roles	*"In care giving, it's not just about providing care-it's about doing it the right way, following every rule and guideline to ensure safety, dignity for those we serve."(E5)*
14) Practices and Competitive Insights	Bench marking industry standards	*"During my internship, I observed how standardized checklists improved patient care consistency." (SF4)*
	Learning from competitors' strategies	*"Analyzing other institutions' care models helps us improve our curriculum." (T7)*
15) Professional exchange channel	Leveraging family professional networks	*"My dad work in the local hospital, so he can help me get an internship there and connect me with professionals in the healthcare field."(SF5)*
16) Social relationship network	Utilization of implicit family social relationship	*"My father's friend works at a senior care center, and since there was a position that suited me well, he recommended me through an internal referral. It really gave me a great opportunity I might not have gotten on my own."(SF1)*
17) Opportunity Access	Awareness of career opportunity	*"Thanks to the guidance from my family, I've become really sharp at spotting job opportunities in elder care. "(SF7)*

Table 4.24 (continued)

Scope	Effective concepts	Representative Original Statements
18) Professional development planning	Setting career goals and milestones	*"My family helped me map out a plan to specialize in hospice care management." (SF10)*
	Awareness of advancement develop	*"I always emphasize to my students how understanding the promotion pathways in elder care can shape their careers. With proper family support and access to the right information, they can better navigate and optimize their advancement opportunities in this field."(T5)*
19) Economic Responsibility	Reducing family financial burden	*"I know a lot of these young caregivers work hard here because they want to lift some of the financial burden off their families—that motivation really shows in their dedication."(E3)*
	Individual economic independence	*"I just want my child to have a stable job in elder care so they can stand on their own two feet and not worry about money."(SF8)*
	Promote social and economic development	*"As an elder care teacher, I believe supporting the silver economy can boost social and economic development while meeting the needs of our aging population."(T8)*
20) Ethical Responsibility	Upholding workplace ethics	*"We instill strong ethical values in students, emphasizing dignity and respect for the elderly." (T6)*
	Reporting unethical behavior	*"We've established anonymous channels for staff and interns to report issues without fear of retaliation." (E8)*
21) Filial piety	Cultural influences of filial responsibility	*"Caring for my grandparents inspired me to pursue this major and help others in similar situations." (SF4)*
	Incorporating emotional values into care-giving	*"In our training, I emphasize that respecting and caring for elders isn't just a skill-it's part of our culture. The students learn to approach every elder with kindness and heartfelt consideration."(T10)*

Table 4.24 (continued)

Scope	Effective concepts	Representative Original Statements
22) Cultural and Traditional Transmission	Integrating traditional values into care-giving practices	*"By weaving traditional values into modern care giving, we can create a more personalized and compassionate approach that truly honors the dignity and unique needs of each elderly individual."(SF9)*
	Cultural sensitivity and respect in care-giving	*"Incorporating familiar cultural elements in care facilities makes residents feel more at home." (T4)*
23) Life Wisdom Transmission	Life Experience	*"Elderly care is not just about assisting seniors in their daily lives, but also about learning from their attitudes on how to face life's difficulties and challenges."（E9）*
	Practical living Wisdom	*"One of the residents showed me a trick to ease joint pain with a warm towel and salt-it's these little hacks they've picked up over the years that you won't find in any textbook."（SF6）*

4.2.3 Axial Coding Analysis

The categories derived from open coding are relatively independent, with their internal relationships yet to be established. Axial coding builds upon the concepts and categories identified during open coding, using the initially formed categories as a central axis to identify and establish connections between them (Al-Eisawi, 2022). Simultaneously, through iterative comparative analysis of the original data, key categories are selected. In axial coding process of this study, 12 main scopes were extracted from the 23 sub-scopes in open coding process. Please refer to Table 4.25 for the axis coding results.

Table 4.25 Axial Coding

main scope	Sub-scope	Scope Connotation
1) Career choice expectation	Gender-job fit	Gender corresponds to job demands in elderly care or reflects workplace equality policies.
	Age-job fit	Age aligns with the functional demands and development opportunities of elderly care management roles.
	Personality-job fit	Personality traits align with the nature and demands of elderly care management work.
2) Elderly care responsibility expectations	Companionship and emotional support	What family members believe is essential for the elderly's daily life.
	Medical and health care	
3) Family-work balance expectation	Time balance	Balancing work deadlines while ensuring quality family time.
	Role conflict management	Effectively manage conflicts between work and family roles to avoid stress from role overlap.
4) Parental educational investment	Parental educational investment	Parental investment in tuition, materials, and academic resources to support the success of elderly care management students.
5) Family living assistance	Family living assistance	Family support that covers basic living needs of elderly care management students, including food, housing, clothing, and transportation.

Table 4.25 (continued)

main scope	Sub-scope	Scope Connotation
6) Investment on professional skills	Soft skills investment	Financial support families provide for self-funded soft skill enhancement beyond formal education in the elderly care industry including students' teamwork skills, communication skills, problem-solving skills, and job responsibility, etc.
	Hard skills investment	Financial support families provide for self-funded hard skill enhancement beyond formal education in the elderly care industry, including students' mastery of geriatric nursing techniques, operation of assistive devices, emergency response skills, rehabilitation therapy methods, and accurate documentation of care records, etc.
7) Industry trend sharing	Market dynamics and innovations	Sharing the latest developments in elderly care market demand, emerging technologies, and industry innovations.
	Policy and regulatory updates	Providing information on new elderly care policies, regulations, and their potential impact on the industry.
	Practices and competitive insights	Sharing successful elderly care industry cases, operational strategies, and competitive analysis.
8) Family social capital	Professional exchange channel	Professional knowledge or skills accumulated by family members in the medical or elderly care fields (such as hospital care or community services).

Table 4.25 (continued)

main scope	Sub-scope	Scope Connotation
	Social relationship network	Family connections within the elderly care industry chain (such as relatives working in elderly care institutions or government departments) facilitate resource coordination and support
	Opportunity access	Relying on family-based implicit social capital (such as internal referrals), individuals can gain priority access to internships, or participation opportunities in elderly care management and policy projects.
9) Professional development planning	Professional development planning	Setting career goals and taking proactive steps to succeed by planning ahead and exploring diverse career paths in the elderly care industry.
10) Social responsibility	Economic responsibility	Reducing the economic burden on families and society while promoting the healthy development of the “Silver Economy”.
	Ethical responsibility	Respecting the dignity and rights of the elderly, upholding fair care and professional ethics, and actively building a harmonious, human-centered elder care environment.
11) Values of filial piety	Filial piety	Being respectful and dutiful toward one’s parents.
12) Inter-generational value transmission	Cultural and traditional Transmission	Transmitting and learning the customs, language, culinary culture, and festive rituals of the elderly, thereby passing down cultural traditions and family values to the younger generation.

Table 4.25 (continued)

main scope	Sub-scope	Scope Connotation
	Life wisdom Transmission	Transmitting the life experiences, practical wisdom, and other non-material values of the elderly.

4.2.4 Selective Coding Analysis

Selective coding aims to identify the "core categories" from the main categories and develop "storylines" (Al-Eisawi, 2022), thus leading to identify main family environmental factors influencing the employability of elderly care management students. This study has identified 12 main categories through axial coding. To ensure comprehensive conceptual coverage, five additional original statements from respondents were analyzed after completing the initial coding. No new significant concepts emerged, and core concepts repeatedly appeared, indicating that theoretical saturation was achieved. The final coding results of this study are shown as Table 4.26.

Table 4.26 Results of Selective Coding Process

Selective coding	Axial coding	Respondent count			Total	Rank
		E	T	SF		
family expectations	career choice expectation	5	2	1	12	4
	elderly care responsibility expectations	1	0	1		
	family-work balance expectation	1	1	0		
financial support	parental educational investment	1	1	4	18	1
	family living assistance	2	3	3		
	investment on professional skills	2	1	1		
informational support	industry trend sharing	2	2	2	13	3
	family social capital and networking	0	0	3		
	professional development planning	0	2	2		

Table 4.26 (continued)

Selective coding	Axial coding	Respondent count			Total	Rank
		E	T	SF		
values and beliefs	social responsibility	2	2	3	15	2
	values of filial piety	1	2	1		
	Inter-generational value transmission	1	1	2		

Notes: E=Employer; T=Teacher; SF=Student and corresponding family. Respondent count = frequency of axial coding scope references made by 10 employers, 10 teachers, and 10 students with corresponding family members) across the 10-question interview.

4.2.5 Relationship between Family Environmental Factors and Employability

The coding system software shows that the main family environmental factors influencing employability of the higher education students majoring in elderly care management are 1) financial support, 2) values and beliefs, 3) informational support, 4) family expectations respectively. Further analysis of the interview text reveals that:

1) Among the family environmental factors examined, financial support showed the strongest influence on employability. There were a total of 18 respondents involved in family financial support. This is because family financial support enables elderly care management students to focus on internships, participate in professional care giving training, and concentrate on job-seeking activities without worrying about immediate livelihood or job-search-related costs. This economic stability helps them adopt a more strategic approach to elderly care career planning, allowing them to better prepare for employment (Hailu et al., 2024).

E3: *We have found that students without financial pressure are more willing to invest time in additional aged care training and workshops. Such candidates adapt more quickly after being hired and demonstrate stronger practical skills in elderly care services.*

T9: *Financial support allows students to choose higher-quality aged care internship placements rather than settling for any opportunity just to cover living expenses. This is crucial for enhancing their professional competence and making informed career choices in elderly care.*

SF2: *If it weren't for my family's support, I would have to work several jobs to make a living, leaving no time for internships in aged care, let alone preparing for interviews in this field.*

2) Values and beliefs ranked second among the examined family environmental factors impacting on employability. There were a total of 15 respondents involved in family values and beliefs. The interviews revealed that the values and beliefs within families in this study include social responsibility, values of filial piety, and inter-generational value transmission, which are shaped by the students family environment. For higher education students, who have received advanced education and developed independent perspectives on life and values, the integration of family values and beliefs with higher education has a more pronounced intrinsic impact on their employability (Li & Zhong, 2022). This influence has gradually risen values and beliefs to become the second most significant factor affecting their employability, following financial support from the family.

E7: *Understanding and practicing filial piety is crucial in our care giving environment. This not only enhances the quality of care provided but also fosters a deeper emotional connection between caregivers and the elderly, promoting a more compassionate and respectful atmosphere.*

T4: *We emphasize the importance of social responsibility, including economic and ethical responsibilities, in our curriculum. By integrating these principles into our teaching, we aim to prepare students to make informed decisions that benefit both the elderly and the broader community, ensuring sustainable and ethical practices in elderly care.*

SF9: *As a student, I believe ethical responsibility is a key to building trust in elderly care institutions. Demonstrating ethical responsibility not only strengthens the reputation of care institutions but also ensures that the elderly receive dignified and respectful treatment, which is fundamental to their well-being.*

3) Informational support ranked third among the examined family environmental factors impacting on employability. There were a total of 13 respondents involved in family informational support. The interviews revealed that family informational support, plays a crucial role in the employability development of students majoring in elderly care. As the elderly care industry evolves rapidly and technological

requirements continue to advance, staying updated with the latest information in a timely manner is essential. This not only helps students adapt to industry changes but also enables them to better cope with the employment challenges brought by an aging society.

E8: *Keeping up with market dynamics and innovations is crucial for elderly care professionals. We prioritize employees who can adapt to emerging technologies and industry shifts.*

T6: *Students with family ties in the industry often benefit from better resource coordination. We encourage them to leverage these networks for professional growth.*
SF3: Having a family member in the elderly care field has helped me gain insights and networking opportunities. Their guidance has been crucial in securing internships and job referrals.

4) Family expectations ranked fourth among the examined family environmental factors impacting on employability. There were a total of 12 respondents involved in family expectations. Insights from interviews reveal that although family expectations impact on employability, their influence is relatively less significant compared to ahead other three family factors-financial support, value and beliefs, informational support,, which due to their higher education. Higher education fosters independence and critical thinking skills, equipping students to make more autonomous decisions (Golden, 2023). In contrast, students without higher education show greater susceptibility to family influence, as they often rely more on family guidance when making career decisions.

E5: *Family expectations are a double-edged sword. They can motivate students to prepare thoroughly, but I've also seen some students apply hastily, clearly without seriously considering whether elderly care is truly suitable for them.*

T1: *Some students may quickly dive into job-seeking within the elderly care industry due to family expectations, but problems arise when they lack genuine interest in the field.*

SF4: *I know my family means well, but sometimes it feels like I'm living for them rather than myself. I chose elderly care management because it's practical, but I often wonder if there are other possibilities out there.*

4.3 Conclusion

In this chapter, data analysis software was employed to analyze the studyresults. The findings of the first objective come from the quantitative research. Questionnaire data from 571 elderly care management students were used to test the causal relationships in the empirical model. First, this study found that family expectations, financial support, informational support, values & beliefs can positively affect employability. Secondly, this study found that elderly care management students' occupational identity has a mediating effect between the independent variables (family expectations, financial support, informational support, values & beliefs) and the dependent variable (employability). Based on these findings, the research hypotheses proposed in Chapter 2 of this study were verified.

The results for the second objective were derived from qualitative research. That is, using Nvivo's analysis of the interviews with 30 stakeholders. It was first found that financial support, values, and beliefs are the main factors influencing the employability of higher education students majoring in elderly care management, followed by informational support and finally by family expectations. In addition, the qualitative findings of this study have been accepted for publication in the African Educational Research Journal, Volume 13, Issue 2, pages 125-135 (2025), under the title *"Exploring how family environmental factors influence the employability of higher education students majoring in elderly care management in Hubei Province, China."*

The above research findings revealed the profound relationship between family environmental factors and student’s employability, addressing the research questions posed in Chapter 1. The next chapter will discuss and conclude with the aforementioned research results.

CHAPTER 5
DISCUSSION AND CONCLUSION

This study poses the following two research questions. **RQ1:** How do family expectation, financial support, informational support, values and beliefs, and occupational identity relate to the employability of the higher education students majoring in elderly care management? **RQ2:** How are the main family environmental factors influencing employability of the higher education students majoring in elderly care management? The research objectives were then defined based on the research questions and themes. **RO1:** To verify the relationships between family expectation, financial support, informational support, values and beliefs, and occupational identity with the employability of the higher education students majoring in elderly care management. **RO2:** To identify the main family environmental factors influencing employability of the higher education students majoring in elderly care management.

First, the quantitative study results achieved the first objective and answered the 1st research question. Specifically, independent variables (family expectation, financial support, informational support, values and beliefs) positively affect dependent variables (employability); Occupational identity has a mediating effect between independent variables and dependent variables.

Second, the qualitative study results analyzed the interview data through Nvivo software and utilized the results of the first objective to identify the main family environmental factors influencing employability of the higher education students majoring in elderly care management, this subsection reached the second objective and answered the 2nd research question.

This chapter is divided into four parts. The first part discusses the answer for **RQ1** and **RQ2**; The second part discusses the possible implications of this study for existing theories; The third part discusses the potential implications for practitioners, and the fourth part presents the limitations of this study and suggestions for future research.

5.1 Discussions

5.1.1 Discussion of Research Question One

RQ1: How do family expectation, financial support, informational support, values and beliefs, and occupational identity relate to the employability of the higher education students majoring in elderly care management? The first research question used quantitative method to achieve **RO1:** To verify the relationships between family expectation, financial support, informational support, values and beliefs, and occupational identity with the employability of the higher education students majoring in elderly care management.

Family expectations significantly and positively influence the employability of higher education students majoring in elderly care management (p=0.001). This finding is in line with previous studies. Specifically, Kim and Yoon (2022) observed that expectations of family care positively correlate with individuals' life satisfaction and future planning, which may indirectly enhance employability in care-related fields. This finding aligns with the views of 12 interviewees who believe that family expectations can enhance individual adaptability and perseverance in professional environments. However, Peng (2021) held different view that the influence of family environment on employability is limited and not significant ($P<0.05$), especially for students from single-parent families, because family factors, such as parents' career expectations, represent relatively stable external variables for them, and its impact on employability will gradually decline with the pass of time, with the increase of people's social experience, their employability will eventually get rid of the constraints of family environment and continue to develop. This inconsistent view may due to different industry. As time goes on, elderly care industry is destined to become more relevant to students and their parents, resulting in a growing impact.

Financial support significantly and positively influences the employability of higher education students majoring in elderly care management (p<0.001). This result is consistent with earlier research. In particular, Moneva and Jumag (2020) demonstrated that satisfaction with financial support was positively associated with students' determination and consistency in learning, which are critical components of employability. This finding is consistent with the perspectives of 18 interviewees who stated that financial support eases their economic pressures, enabling them to concentrate more on their studies

and career development. While Pivoriutė (2024) examined the relationship between family financial support and employment outcomes, her findings revealed that parental financial support was significantly and negatively correlated with employment status (r=-0.358, ***p<0.001). This difference may stem from sample variation. Pivoriutė's study, focused on young adults during COVID-19, found a negative correlation-financial support likely reduced job-seeking urgency, as 61.49% lived with parents. In contrast, this study surveyed 1,362 elderly care students in Hubei, China, who have clearer job goals and career paths, making parental support a driver of employability.

Informational support significantly and positively influences the employability of higher education students majoring in elderly care management (p<0.001). This result is consistent with earlier research. In particular, Zhang et al. (2020) demonstrated that informational support positively affect students' job-seeking efficacy and reduce employment anxiety, crucial factors for employability. This finding aligns with the views of 13 interviewees who emphasized the importance of receiving timely information about internships and industry trends, which not only broadened their professional networks but also enhanced their chances of securing relevant employment.

Values and beliefs significantly and positively influence the employability of higher education students majoring in elderly care management (p<0.001). This finding is in line with previous studies. Specifically, Won and Jang (2020) also highlighted that fostering positive attitudes toward the elderly, minimizing prejudice, and enhancing empathy significantly contribute to encouraging students to consider careers in elderly care. This finding is consistent with the perspectives of 15 interviewees who indicated that students are driven to pursue careers in this field by a deep sense of responsibility, empathy, and respect for the elderly.

Occupational identity significantly and positively influences the employability of higher education students majoring in elderly care management (p<0.001). This result echoes earlier studies. Notably, Shougen et al. (2023) found that higher levels of occupational identity are positively correlated with stronger humanistic care abilities, which are crucial for professional competence in elderly care. Long et al. (2024) indicated that Practical training requires flexible, creative, and adaptable social workers in whom an anchored professional identity can help manage the high job requirements and lead to increased resilience in coping with the demands of practice.

Family expectations significantly and positively influence the occupational identity of higher education students majoring in elderly care management ($p<0.001$). This finding is in line with previous studies. Specifically, Hasim et al. (2023) conducted a quantitative study on vocational school students and found that students who anticipated higher salaries and sought to fulfill familial expectations demonstrated a greater willingness to maintain their current career trajectories, exhibiting stronger vocational identity and commitment. Chudner et al. (2025) emphasized that understanding work-related gender role expectations is essential in the context of self-employed family medicine, as these factors reveal the unique intersection between professional identity formation and the selection of practice models.

Financial support significantly and positively influences the occupational identity of higher education students majoring in elderly care management ($p<0.001$). This result echoes earlier studies. Notably, in a qualitative study examining college students in the United States, Smith (2023) found that parental financial support and the transmission of values served as pivotal factors in shaping students' career aspirations and professional identity formation, with particularly pronounced effects among students from immigrant families. Zhang and Li (2023) found that among 394 nurses surveyed from elderly care institutions in China, those aged 40 years or older, earning 3000 yuan or less per month, and lacking family support were significantly more likely to have lower levels of professional identity.

Informational support significantly and positively influences the occupational identity of higher education students majoring in elderly care management ($p=0.001$). This finding is in line with previous studies. Specifically, Huang et al. (2022) found that social support, including family informational support, indirectly predicts occupational identity through the mediating effects of achievement motivation and subjective well-being among junior college students. On the other hand, Yun et al. (2024) revealed that informational social support positively enhances employees' cognitive processes up to a certain threshold; however, once this threshold is exceeded, the excessive support becomes detrimental, demonstrating a curvilinear pattern where the initial benefits gradually give way to cognitive overload and declining performance. This may be because Yun, Beehr, and Do's study primarily focuses on 108 male employees in South Korea, whose cultural and gender roles significantly shape their response to informational

support. In South Korean culture, men are often expected to demonstrate independence, resilience, and problem-solving capabilities without frequently seeking help. In contrast, in the context of Chinese elderly care management students-who are predominantly female are more likely to actively seek both emotional support and informational support, integrating them into their learning process as complementary. Therefore, the curvilinear pattern observed among Korean male employees may not fully apply to Chinese elderly care management students.

Values and beliefs positively significantly and positively influence the occupational identity of higher education students majoring in elderly care management ($p<0.001$). This result echoes earlier studies. Notably, Bifarin et al. (2022) highlighted that cultural values related to filial piety and familial obligations deeply influence students' occupational identity, particularly regarding future caregiving roles for elderly family members. However, Li et al. (2021) held a different view, stating that the relationship between family beliefs and occupational attitudes among nursing students was different with high or low levels of social support. The impact of family beliefs on occupational attitudes was stronger when social support was low but not significant when social support was high. This discrepancy may stem from the fact that elderly care management emphasizes administrative coordination, policy implementation, communicating with the elderly during the uncertain and often prolonged aging process, whereas nursing focuses more on clinical skills, medical interventions and interactions with patients across all age groups only within sick period. As a result, the influence of family values and beliefs on occupational identity may manifest differently within corresponding field.

Occupational identity mediates the relationships between family expectations, financial support, informational support, values and beliefs, and the employability of higher education students majoring in elderly care management. This study also found that elderly care management students' occupational identity has a mediating effect between the independent variables (family expectations, financial support, informational support, values & beliefs) and the dependent variable (employability). This is in agreement with previous research. Elliott et al. (2023) found that family expectations regarding a profession can strengthen an individual's identity of their chosen career, leading them to perceive the work as valuable and aligned with their personal goals, thereby enhancing

their job performance. In the study by Claessens et al. (2024), participants emphasized that maternal investment from their mother during international placements were pivotal in strengthening professional confidence and identity, and enabling a smooth transition from student to employee, ultimately contributing to enhanced work performance. Shikata et al. (2021) highlighted that access to relevant information and resources improves individuals' occupational identity, which can be applied to higher education students pursuing elderly care management to enhance their employability through improved self-perception and work readiness. Yi et al. (2022) indicated that Family spiritual and emotional support and encouragement can enhance an individual's psychological identity, increase their competency to handle more complex tasks, and lead to superior work performance when facing the same work content.

5.1.2 Discussion of Research Question Two

RQ2: How are the main family environmental factors influencing employability of the higher education students majoring in elderly care management? The second research question used qualitative method to achieve **RO2:** To identify the main family environmental factors influencing employability of the higher education students majoring in elderly care management.

The qualitative research in this study found that, among the examined family environmental factors, financial support demonstrated the strongest direct effect on employability. It was followed by values and beliefs, informational support, and finally family expectations. These findings are consistent with the quantitative research results, which showed that financial support had the strongest direct effect on employability (FS→EMP, $\beta = 0.205$, $p < 0.001$), followed by values and beliefs (VB→EMP, $\beta = 0.193$, $p < 0.001$), informational support (IS→EMP, $\beta = 0.16$, $p < 0.001$), and family expectations (FE→EMP, $\beta = 0.15$, $p = 0.001$). These results identify the main family environmental factors influencing employability of the higher education students majoring in elderly care management as follows:

(1) Family financial support significantly influences the employability of elderly care management students through parental educational investment, family living assistant, and professional skills investment. This empirical evidence supports the views of previous researchers. Dynarski et al. (2023) pointed out that financial support from parents, such as covering tuition fees and purchasing educational resources, enables

students to focus on their studies without being burdened by financial stress. This support is particularly crucial for students involved in elderly care management, as it allows them to manage care giving responsibilities while maintaining their academic performance. Additionally, Moores and Burgess (2023) emphasized that students from low-income households benefit significantly from parental educational investment, which improves retention rates and academic outcomes, further enhancing employability. Similarly, Goet (2022) highlighted that consistent family support in the form of living allowances improves students' financial literacy, which is essential for managing expenses and planning for future careers. Thorne (2022) noted that professional skills investment is particularly valuable for students with care giving responsibilities, as it helps them develop the necessary skills and practical knowledge to succeed in their chosen fields. Instead, Pivoriutė (2024) found that for some Lithuanian young adults, financial support from parents conflicted with their desired career paths and raised fears of having to pursue undesirable jobs to achieve independence. This dependence, coupled with uncertainty, may undermine their confidence and sense of autonomy in career development . This different opinion may stem from varying socio-cultural contexts. In China, family financial support is often viewed as a shared family investment, especially for students in elder care programs where early career returns may be limited. It allows them to focus on developing skills and gaining experience, thereby enhancing employability. In contrast, research from Lithuania showed that continued financial dependence can clash with the pursuit of independence, potentially weakening young adults' confidence in building meaningful careers.

(2) Family values and beliefs significantly influence the employability of elderly care management students through social responsibility, values of filial piety, and inter-generational value transmission. This empirical evidence supports the views of previous researchers. Yi et al. (2022) pointed out that family environments that foster values of justice and empathy significantly contribute to the development of a strong sense of social responsibility among college students. Fonseca et al. (2019) noted that students who engage in socially responsible activities during their academic years develop stronger professional skills and a deeper commitment to elderly care, improving their employability prospects. Bennett et al. (2020) pointed out that familial values such as love, reciprocity, and responsibility rooted in filial piety, significantly influence caregiving motivations,

thereby enhancing students' emotional skills and employability in elderly care management. Lien et al. (2021) added that inter-generational care giving experiences can either create family harmony or disruption, with harmonious relationships encouraging students to pursue care giving professions. In contrast, Ng et al. (2022) indicated that extrinsic work values did not predict external employability. This divergence primarily stems from Ng et al. (2022) examining employability in general workplace settings, while this study specifically focuses on elderly care-a highly ethics-driven field where altruistic values and social responsibility (often instilled through family upbringing) serve as key employer evaluation criteria. Additionally, Ng et al.'s study measured external employability through market-oriented competitive indicators (e.g., job-position fit), whereas the elderly care industry emphasizes value congruence-an implicit employability factor reflecting alignment with professional values and beliefs.

(3) Informational support significantly influence the employability of elderly care management students through industry trend sharing, family social capital, and career development planning. This empirical evidence supports the views of previous researchers. Specially, Hofer et al. (2020) pointed that merely providing access to career and labor market information is not sufficient; students, particularly those with limited prior exposure to career planning, may struggle to interpret and apply complex information without additional guidance from either parents or career professionals. Li and Zhong (2022) pointed out families with better access to information about employment opportunities and market developments are able to provide valuable advice to students, thus enhancing their readiness for the job market. Baik et al. (2024) pointed out that Social capital derived from family networks was positively associated with formal volunteering among caregivers, which enhances employability by providing practical experience and community engagement. Han and Zhang (2023) pointed out that parental career support, including verbal encouragement and information about career pathways, has a significant positive influence on students’ career adaptability. However, Prasetya and Soetjipto (2023) found that family support had a positive and significant impact on burnout, which in turn increased job stress. This suggests that in this context, family informational support, did not function as a protective factor enhancing job performance or capability, but rather contributed to emotional exhaustion, potentially undermining employment-related functioning. The differing findings stem from variations in study context and target groups.

For Chinese elder care students, family informational support - such as advice on industry trends and career planning - helps them stay aligned with evolving industry demands and continuously upgrade their professional skills. In contrast, the study of Prasetya & Soetjipto focuses on 641 female employees at Tunas Artha Mandiri in Indonesian, where family support is shaped by traditional norms that emphasize women's domestic responsibilities, making such support more emotionally oriented and less focused on professional growth.

(4) Family expectations significantly influence the employability of elderly care management students through career choice expectation, elderly care responsibility expectations and family-work balance expectation. This empirical evidence supports the views of previous researchers. Hadiyati and Astuti (2023) pointed out that family expectations, along with personality and interests, guide students toward specific career paths, ultimately affecting their employability. Zhao and Zhao (2022) pointed out that career expectations can affect employment-related stress and decision-making. Students from families that emphasize care giving roles are more likely to experience pressure to pursue careers in fields like elderly care, which aligns with familial and cultural values of responsibility and care. Aires et al. (2019) pointed out that filial responsibility expectations are strongly associated with care giving behaviors, students raised in families with strong elder care expectations are more likely to provide care for older adults and consider careers in elder care management. Medeiros et al. (2022) emphasized that individuals with strong family support and clear expectations of balancing work and care giving are better able to navigate these dual responsibilities, improving their employability in care giving fields. Gragnano et al. (2020) indicated that work-life balance have a significant effect on job satisfaction. Daoud et al. (2024) suggested that employees with higher job satisfaction tend to demonstrate stronger work capabilities. Whereas, Young et al. (2023) indicated that work-life balance did not have a significant main effect on occupational satisfaction in information technology area. This inconsistency may also be related to differences in work-life balance expectations and norms across professions, with the elderly care industry placing greater emphasis on emotional labor and caregiving responsibilities, while the IT sector often values flexibility, innovation, and project-based outcomes.

5.2 Implication to Theories

5.2.1 Implications to Ecological Systems Theory

This study applies ecological systems theory provides a theoretical foundation for the relationship between the independent variables (family expectations, financial support, informational support, and family values and beliefs) and the dependent variable (employability) in the empirical model of this study. The quantitative research results validate the relationship between the family environment and employability, while the qualitative research results identify the main family environmental factors influencing the employability of elderly care management students. The aforementioned findings enrich the existing research on how family environmental factors influence the employability of higher education students majoring in elderly care management and provide valuable theoretical implications:

(1) From one perspective, this study substantiates the ecological systems theory by highlighting the pivotal role of the family-based microsystem in employability development. The quantitative results of this study finds that family expectations, financial support, informational support, value and beliefs significantly enhance students' employability by improving career planning, adaptability, and proactivity. This aligns with previous research (Ferguson & Evans, 2019). The study confirms Bronfenbrenner's opinion that proximal processes within the microsystem (direct family interactions) play a fundamental role in individual development (Crawford, 2020). Earlier studies on family influence primarily focused on general behavioral outcomes, neglecting employability as a distinct form of adaptive behavior. By empirically testing ecological systems theory in this context of elderly care management education, this study identifies and validates two research gaps: 1) Family expectations positively influences the employability of higher education students majoring in elderly care management, and 2) Values and beliefs positively influences the employability of higher education students majoring in elderly care management. It is noteworthy that both the qualitative and quantitative findings from this study indicate that, compared to family expectations (FE→EMP, $\beta = 0.15$, $p=0.001$), values and beliefs (VB→EMP, $\beta = 0.193$, $p<0.001$) have a more significant impact on employability. This is because college students with higher education tend to think independently when making career choices rather than relying solely on family expectations (Ahearn, 2021). Consequently, the influence of

values and beliefs within the family environment more profoundly shapes their perceptions of technical competence and career prospects, thereby exerting a greater impact on employability (Rosenzweig & Chen, 2023). This finding offers a new direction for future research on the family-based microsystem within the framework of ecological systems theory.

(2) From another perspective, this study extends the application of ecological systems theory in the fields of vocational decision-making. Ecological systems theory emphasizes that the microsystem (direct interactions between the individual and their immediate environment, such as family) and the mesosystem (connections between different microsystems, such as the relationship between family and school) have direct and profound effects on individual development (Iruka et al., 2020). Previous research has primarily focused on how these two systems influence children's growth and academic performance, with less attention given to their roles in career decision-making and employment preparation. This study demonstrates that family environmental factors significantly influence various aspects of students' career decision-making, including career awareness, option evaluation, and goal-setting processes (Ojo & Olufunke, 2019), which help students better understand potential career paths, assess opportunities in the labor market, and make choices aligned with their personal and professional aspirations. This finding expands the application scope of ecological systems theory beyond traditional education and psychological development into the areas of career planning and vocational decision-making, emphasizes how immediate family environments shape the career-related decisions.

5.2.2 Implications to Identity Control Theory

This study applies identity control theory to analyze whether family expectations, financial support, informational support, values, and beliefs influence the employability of students majoring in elderly care management through the mediating role of occupational identity. The results of the quantitative analysis further validate the reliability of these hypotheses and indicate that occupational identity serves as an important bridge connecting the external social environment and individual career behavior, these findings provide practical support and evidence for the application of identity control theory in the field of elderly care management education.

(1) The findings of this study provide strong empirical support for the core principle of identity control theory. Identity control theory has emphasized that individuals' identities are shaped by external social environments and guide their behaviors through continuous self-regulation and feedback processes (Scheepers & Ellemers, 2019). This study confirms these theoretical assumptions by showing that elderly care management students develop stronger occupational identities when they receive consistent family support, leading to improved employability outcomes. This finding is consistent with earlier research. Individuals' occupational identity is shaped by external environmental factors, which in turn influence their behavior (Stets & Burke, 2024). Zhang et al. (2023) found that occupational identity mediates the influence of family environment on career decisions. Furthermore, Sun et al. (2020) emphasized that family expectations enhance self-identity, extending into occupational identity and shaping career paths. While identity control theory has previously been applied to understand general identity-behavior relationships, this study enhances its application by highlighting how specific family environmental factors affect occupational identity formation and subsequent employability in the elderly care industry. Specifically, the quantitative research found that among the examined family environmental factors, family expectations demonstrated the strongest indirect effect on employability through occupational identity ($\beta = 0.045$, $p = 0.001$), surpassing the mediating effects of financial support (FS→OI→EMP,$\beta = 0.035$, $p < 0.01$), informational support (IS→OI→EMP, $\beta = 0.026$, $p < 0.01$), and values and beliefs (VB→OI→EMP, $\beta = 0.029$, $p < 0.01$). These results emphasize the crucial impact of family expectations on the formation of students' occupational identity. This indicates that family factors have varying degrees of influence on occupational identity, which in turn affects employability and provides new perspectives for future research.

(2) This study broadens the scope of identity control theory by applying it to the field of elderly care management. For elderly care management students, identity adjustment is crucial, as they are particularly susceptible to societal prejudices and the low status associated with their field. For example, even with strong technical skills, a weak occupational identity can diminish employment confidence and lower career expectations for elderly care management students (Moll-Jongerius et al., 2023). Our findings demonstrate that family environmental factors not only enhance awareness of the elderly care profession but also promote the internalization of specific occupational identity

standards, thereby broadening the application of identity control theory. While previous research has focused on fields such as medicine and education (Moll-Jongerius et al., 2023), this study confirms that occupational identity mediates the relationship between family influences and employability in elderly care management, addressing a gap in the literature and underscoring the theory's applicability to emerging high-demand industries, such as global ageing.

In summary, this study not only validates the results of previous research but also confirms the applicability of ecological systems theory and identity control theory in elderly care management area. This study provides strong empirical support for in-depth exploration of the ecological system factors that students face during their career decision-making process. Moreover, by further applying identity control theory in the elderly care management industry, relevant universities or institutions can better understand and adjust the dynamic balance between self-identity and social career roles among students majoring in elderly care management.

5.3 Implication to Practitioners

In addition to its theoretical implications, this study can serve as a valuable reference for elderly care management related policymakers, university administrators, teachers, parents, students and employers:

Firstly, policymakers may also find these findings valuable in guiding workforce development within the elderly care sector. Qualitative evidence indicates that financial support is the most immediate and influential factor affecting employability, operating primarily through parental investment in education, assistance with daily living expenses, and funding for professional skill acquisition. These findings are particularly relevant in the context of Hubei Province, which-owing to its central geographic location, extensive elderly care infrastructure, and strong educational resources-is planning to position itself as a national hub for elderly care services over the next five years. Aligning educational policies with these regional development goals, particularly by supporting students from financially disadvantaged backgrounds and fostering collaboration among families, educational institutions, and employers, can help build a skilled and responsive workforce to meet future sector demands.

Second, the quantitative findings show that family expectation, financial support, informational support, values and beliefs, and occupational identity has a positive impact on the employability of the higher education elderly care management students, By understanding the influence of family environment on student career motivation and performance, university administrators can develop strategies to enhance educational outcomes. This study contributes to the broader discourse on educational equity, highlighting the role of parental involvement in shaping student academic and career achievements. so university administrators can use this as a basis to develop targeted support programs and curricula, with a particular focus on leveraging the positive influence of the above family environmental factors. For instance, university administrators can organize career development seminars and interactive sessions involving parents to enhance family support in students' career decision-making and development.

Third, the quantitative research results indicate that the occupational identity of elderly care management students plays a mediating role in their employability. Therefore, teachers should facilitate career-related discussions, mentorship programs, and opportunities for industry engagement to help students better understand the societal importance and professional value of elderly care. Furthermore, teachers are encouraged to integrate digital tools into their instruction to enhance students' digital literacy, which is increasingly essential in modern care environments. They should also supervise practical training and actively connect theoretical learning with hands-on experience through community-based caregiving labs. These combined efforts can significantly strengthen students' motivation, self-efficacy, and overall employability in the field.

Fourth, the qualitative research identifies financial support and values and beliefs as the main family environmental factors influencing the employability of higher education elderly care management students. This finding offers valuable insights for parents to develop initiatives that engage more in supporting elderly care management students' career development. For instance, parents can provide consistent financial support to reduce students' stress related to tuition fee and living expenses, allowing them to focus more on developing their professional skills. Moreover, parents can foster open discussions about values and beliefs, emphasizing the importance of elderly care work and its societal impact. By offering both financial and emotional support, parents can help

students strengthen their occupational identity, and better prepare for successful careers in the elderly care industry.

Fifth, this study also contributes to helping elderly care management students plan and develop their careers. By examining the influence of family environmental factors on their employability, this study highlights how these factors shape elderly care management students' key employability skills, such as emotional intelligence, practical skills, creativity, problem-solving abilities, and work-based learning. Understanding the impact of these family environmental factors can empower students to make more informed career decisions while also enhancing their essential skills for future success in the elderly care industry.

Lastly, this study is expected to have an indirect impact on the employers of elderly care institutions. If students possess the necessary employability skills before entering the workforce, the employers of elderly care institutions can save significant time and resources on training. This reduction in training costs will not only facilitate a smoother and faster integration of graduates into the work environment but also enhance overall operational efficiency. Furthermore, a workforce equipped with essential skills will better position elderly care institutions and enable their employers to respond effectively to the supply-demand imbalance caused by the global aging trend.

5.4 Limitation of the Study and Implications of Future Research

5.4.1 Limitation of the Present Study

This study has several limitations. Firstly, the main family environmental factors influencing employability proposed in this study were derived from empirical research in the field of elderly care management. While these factors can help elderly care management students enhance their employability, they may not be applicable to other unrelated fields.

Secondly, while the researcher sought to generalize the study findings by including various categories of universities, all participants involved in the quantitative portion of this study were from one city, Hubei, where elderly care management programs are offered. Consequently, conducting a study with elderly care management students from different regions might produce varying results.

Third, qualitative research often involves smaller sample sizes, which may not capture the full diversity of the research population (Staller, 2021). As a result, the perspectives of the stakeholders included in this study may not comprehensively represent the views of all stakeholders associated with elderly care management students.

5.4.2 Implications for Future Research

This study identifies its limitations and suggests that future research should overcome these limitations.

First, this study's empirical model is developed within the context of the elderly care area. For future research building upon this model, the researcher suggests the others to carry out a longitudinal study to investigate trends over time and evaluate the model's applicability in the elderly care job market.

Secondly, this study verify family environmental factors influencing employability of elderly care management students based on family influence scales and stakeholder interviews. Although past studies have shown that certain variables positively affect employability, very few have investigated the family environment of students in the field of elderly care or elderly care management. Therefore, such research could further address existing gaps in the literature on elderly care and the employability of students in this field. Researchers who are interested in employability within the elderly care area or among elderly care management students are encouraged to conduct quantitative studies that examine the relationships between relevant variables and employability in this specific context.

5.5 Conclusion

Building on the findings of the previous chapter, this chapter first discusses the RQ1 to verify the relationships between family expectation, financial support, informational support, values and beliefs, and occupational identity with the employability of the higher education students majoring in elderly care management. These analyses aim to validate the validity and rationality of the empirical model proposed in this study. Then this chapter discusses RQ2 to identify the main family environmental factors influencing employability of the higher education students majoring in elderly care management. On this basis, the implications of theories are presented, and the implications of practitioners from the perspectives of universities, teachers, families, students and institutions are

shown. Finally, the study's limitations are pointed out, and future research directions are proposed.

BIBLIOGRAPHY

Aarón, Manrique-Espinoza, Cruz-Góngora, & Rivera-Almaraz. (2019). Socioeconomic inequalities in health and nutrition among older adults in Mexico. *salud pública de méxico*, 61, 898-906. https://doi.org/10.21149/10556.

Abdalla, Oliveira, Azevedo, & Gonzalez. (2018). Quality in qualitative organizational research: Types of triangulation as a methodological alternative. *Administração: ensino e pesquisa*, 19(1). https://doi.org/10.13058/raep.2018.v19n1.578.

Adela, Rocabert Beut, Abellán Roselló, Gómez Artiga, & Doménech Betoret. (2021). Influence of teacher and family support on university student motivation and engagement. *International Journal of Environmental Research and Public Health*, 18(5): 2606. https://doi.org/10.3390/ijerph18052606.

Agarwala, Maity, & Sahu. (2022). Female entrepreneurship, employability and empowerment: impact of the mudra loan scheme. *Journal of Developmental Entrepreneurship*, 27(01): 2250005. https://doi.org/10.1142/S1084946722500054.

Aguilera, De Massis, Fini, & Vismara. (2024). Organizational goals, outcomes, and the assessment of performance: reconceptualizing success in management studies. *Journal of Management Studies*, 61(1), 1-36. https://doi.org/10.3390/ijerph191811282.

Ahearn. (2021). Planning for college and careers: How families and schools shape the alignment of postsecondary expectations. *Sociology of Education*, 94, 271-293. https://doi.org/10.1177/00380407211039272.

Aires, Mocellin, Pizzol, Bierhals, Chappell, De Morais, & Paskulin. (2019). Association between attitudes of filial responsibility and parent caregiving behavior. *Educational Gerontology*, 45, 191-200. https://doi.org/10.1080/03601277.2019.1600844.

Akkaş, & Meydan. (2024). Sampling methods in qualitative sampling in multicultural settings. In Principles of conducting qualitative research in multicultural settings (pp. 34-55). IGI Global. https://doi.org/10.4018/979-8-3693-3306-8.ch003.

Al-Eisawi. (2022). A design framework for novice using grounded theory methodology and coding in qualitative research: Organisational absorptive capacity and knowledge management. International Journal of Qualitative Methods, 21, 1-13. https://doi.org/10.1177/16094069221113551.

Algoso, Ramjan, East, & Peters. (2024). Teaching and learning the art of nursing through aged care work experience. *Teaching and Learning in Nursing*, 19(1), e89-e95. https://doi.org/10.1016/j.teln.2023.09.010.

Alhwaiti. (2023). Acceptance of artificial intelligence application in the post-COVID era and its impact on faculty members' occupational well-being and teaching self-efficacy: A path analysis using the UTAUT 2 model. *Applied Artificial Intelligence*, 37(1), 2175110. https://doi.org/10.1080/08839514.2023.2175110.

Alnajjar, & Hashish. (2024). Exploring the effectiveness of the career guidance and counseling program on the perceived readiness for the job market: A lived experience among nursing students. *Frontiers in Public Health*, 12. https://doi.org/10.3389/fpubh.2024.1403730.

Amaral, & Loureiro. (2021). Evaluation of the impact of a socio-educational intervention in quality of life and mental health of institutionalized elderly. *European Psychiatry*, 64(S1), S465-S465. https://doi.org/10.1192/j.eurpsy.2021.1243.

Andrade. (2020). The inconvenient truth about convenience and purposive samples. *Indian Journal of Psychological Medicine*, 43, 86-88. https://doi.org/10.1177/0253717620977000.

Argyriadis, Patelarou, Paoullis, Patelarou, Dimitrakopoulos, Zisi, Northway, Gourni, Asimakopoulou, & Katsarou. (2022). Self-assessment of health professionals' cultural competence: Knowledge, skills, and mental health concepts for optimal health care. *International Journal of Environmental Research and Public Health*, 19(18), 11282. https://doi.org/10.3390/ijerph191811282.

Arun, & Holdsworth. (2020). Integrated social and health care services among societies in transition: Insights from Turkey. *Journal of aging studies*, 53, 100850. https://doi.org/10.1016/j.jaging.2020.100850.

Aung, Koyanagi, Nagamine, Nam, Mulati, Kyaw, Moolphate, Shirayama, Nonaka, & Field. (2022). Digitally inclusive, healthy aging communities (DIHAC): a cross-cultural study in Japan, Republic of Korea, Singapore, and Thailand. *International Journal of Environmental Research and Public Health*, 19(12), 6976. https://doi.org/10.3390/ijerph19126976.

Babbie. (2020). The practice of social research (15 ed.). Cengage Learning.

Baharum, Ismail, Awang, McKenna, Ibrahim, Mohamed, & Hassan. (2023). The study adapted instruments based on Confirmatory Factor Analysis (CFA) to validate measurement models of latent constructs. *International Journal of Environmental Research and Public Health*, 20(4), 2860. https://doi.org/10.3390/ijerph20042860.

Baik, Crittenden, & Coleman. (2024). Social capital and formal volunteering among family and unpaid caregivers of older adults. *Research on Aging*, 46(2), 127-138. https://doi.org/10.1177/01640275231202260.

Bakirhan. (2023). The relationship between the level of ethical sensitivity of elderly care students and their attitudes to the elderly. *INTERNATIONAL REFEREED ACADEMIC JOURNAL OF SPORTS*, 47(5). https://doi.org/10.17363/sstb.2023/abcd89/.47.5.

Bao, Ma, & Chao. (2024). Research on the supply and demand of elderly care service resources in China. *Public Health Nursing*, 41(5), 1082-1088. https://doi.org/10.1111/phn.13342.

Baughman, Palmisano, Sanders, Blackie, Sperling, Scott, Radwany, & Drost. (2019). Use of Film to Sensitize Medical Students to Issues of Family Caregiving. *PRiMER*, 3, 14. https://doi.org/10.22454/PRIMER.2019.254302.

Bennett, Knight, & Rowley. (2020). The role of hybrid learning spaces in enhancing higher education students' employability. *British Journal of Educational Technology*, 51(4), 1188-1202. https://doi.org/10.1111/bjet.12931.

Bertossi. (2023). Attribution-scores in data management and explainable machine learning. In European Conference on Advances in Databases and Information Systems (pp. 16-33). Springer.

Besari. (2022). Family education as the first education for children. *Jurnal Paradigma*, 14(2), 218-226. https://doi.org/10.53961/paradigma.v14i2.124.

Bifarin, Felton, & Prince. (2022). Defensive practices in mental health nursing: Professionalism and poignant tensions. *International Journal of Mental Health Nursing*, 31(3), 743-751. https://doi.org/10.1111/inm.12936.

Bladt, Fuino, Shemendyuk, & Wagner. (2023). Modelling the burden of long-term care for institutionalised elderly based on care duration and intensity. *Annals of Actuarial Scienc*e, 17(1), 83-117. https://doi.org/10.1017/S1748499522000136.

Bloch, Fuglsang, Glavind, & Bendtsen. (2023). Quality work in higher education: a multi-stakeholder study. *Quality in Higher Education*, 29(3), 340-357. https://doi.org/10.1080/13538322.2022.2123267.

Brown. (2021). A methodology , and a gender identity : Bringing pragmatism and mixed methods research to transformative non-binary focused sociophonetic research. *Toronto Working Papers in Linguistics*, 43(1). https://doi.org/10.33137/twpl.v43i1.35965.

Burakgazi. (2025). The ecological model of human development. In Exploring Adult Education Through Learning Theory (pp. 325-342). IGI Global. https://doi.org/10.4018/979-8-3693-5812-2.ch013.

Burchardt, Steele, Grundy, Karagiannaki, Kuha, Moustaki, Skinner, Zhang, & Zhang. (2021). Welfare within families beyond households: Intergenerational exchanges of practical and financial support in the UK. *LSE Public Policy Review*, 2(1). https://doi.org/10.31389/lseppr.41.

Burke, & Stets. (2022). Identity theory: Revised and expanded. Oxford University Press.

Burns. (2019). Theorising Professions: A Sociological Introduction. *Palgrave Macmillan*. https://doi.org/10.1007/978-3-030-27935-6.

Cannon, & Barry. (2023). Associations between family caregiving and romantic relationships: An exploratory study with non-distressed couples caring for an outside family member. The Gerontologist. https://doi.org/10.1093/geront/gnad104.

Cech. (2021). The trouble with passion: How searching for fulfillment at work fosters inequality. Univ of California Press.

Chandran. (2020). Extent of Population Ageing and Intergenerational Support in the States of India. 115-127. https://doi.org/10.1007/978-981-15-5187-1_7.

Charmaz, & Thornberg. (2021). The pursuit of quality in grounded theory. *Qualitative research in psychology*, 18(3), 305-327. https://doi.org/10.1080/14780887.2020.1780357.

Cheisviyanny, Dwita, Septiari, & Helmayunita. (2022). Career choice factors of Indonesian accounting students. *Revista Contabilidade & Finanças*. https://doi.org/10.1590/1808-057x20221475.en.

Chen. (2023). Impact of China's Aging Population on Economic Development and Possible Solutions. *BCP Business & Management*, 38, 897-904. https://doi.org/10.54691/bcpbm.v38i.3794.

Chen, Blakely, Daugherty, Kiersma, Meny, & Pereira. (2024). Meaningful Connections: Exploring the Relationship Between Empathy and Professional Identity Formation. *American Journal of Pharmaceutical Education*, 88(8), 100725. https://doi.org/10.1016/j.ajpe.2024.100725.

Chen, Liang, & Liu. (2024). The Impact of Perceived Parental Expectations on Career Adaptability: The Moderating Role of Parental Career Support. *Journal of Psychological Research*, 6(1), 9-16. https://doi.org/10.30564/jpr.v6i1.6106.

Chen, Ma, Feng, & Lin. (2023). Correlation analysis of self-directed learning ability, self-efficacy and academic burnout of junior nursing college students in closed management colleges. *Nursing Open*, 10(4), 2508-2518. https://doi.org/10.1002/nop2.1509.

Chen, Sun, & Jao. (2020). A predictive model of student nursing competency in clinical practicum: A structural equation modelling approach. *Nurse Education Today*, 95, 104579. https://doi.org/10.1016/j.nedt.2020.104579.

Chen, & Yu. (2023). Self-Care Behavior and Associated Factors of Nursing Students with Dysmenorrhea: A Structural Equation Model. *Journal of Nursing Management*, 2023, 1-11. https://doi.org/10.1155/2023/8820772.

Chia, & Malhotra. (2023). Caregiving for older adults: exploring the implications for familial relations, dynamics, and friendship. *Innovation in Aging*, 7, 366-366. https://doi.org/10.1093/geroni/igad104.1215.

Chidebe, Cummins, Narine, & Yamashita. (2023). Care for older adults: What skills do health care employers value in community college students? *Innovation in Aging*, 7(Supplement_1), 235-235. https://doi.org/10.1093/geroni/igad104.938.

Chudner, Shnider, Gluzman, Keidar, & Haimi. (2025). Gender Perspectives on Self-Employment Among Israeli Family Physicians: A Qualitative Study. *Social Sciences*, 14(2), 96. https://www.mdpi.com/2076-0760/14/2/96.

Chughtai. (2019). Servant leadership and perceived employability: proactive career behaviours as mediators. *Leadership & Organization Development Journal*, 40(2), 213-229. https://doi.org/10.1108/lodj-07-2018-0281.

Claessens, Vikström, & Sy. (2024). Professional identity development of Flemish occupational therapists: A narrative study. *Scandinavian journal of occupational therapy*, 31(1), 2432298. https://doi.org/10.1080/11038128.2024.2432298.

Clarke, & Ravenswood. (2019). Constructing a career identity in the aged care sector: overcoming the "taint" of dirty work. *Personnel Review*. https://doi.org/10.1108/PR-08-2017-0244.

Collins, Glessner, Porcu, Lepamets, Brandon, Lauricella, Han, Morley, Niestroj, & Ulirsch. (2022). A cross-disorder dosage sensitivity map of the human genome. *Cell*, 185(16), 3041-3055. e3025. https://doi.org/10.1016/j.cell.2022.06.027.

Corredor, & Martínez. (2020). Employability as a Complex Problem. *Ingeniería Solidaria*, 16(2), 1-21. https://doi.org/10.16925/2357-6014.2020.02.01.

Costantini, Nihei, & Ono. (2024). Caring without Tolerance: Care Literacy as an Enabler of an Inclusive Society. *Social Sciences*, 13(7), 369. https://doi.org/10.3390/socsci13070369.

Crabtree. (2024). H is for Human and How (Not) To Evaluate Qualitative Research in HCI. ArXiv, abs/2409.01302. https://doi.org/10.48550/arXiv.2409.01302.

Crawford. (2020). Ecological Systems Theory: Exploring the Development of the Theoretical Framework as Conceived by Bronfenbrenner. *Journal of Public Health Issues and Practices*, 4(2), 170. https://doi.org/10.33790/jphip1100170.

Creswell, & Poth. (2016). Qualitative inquiry and research design: Choosing among five approaches. Sage publications.

Daoud, Sellami, Ben Chabene, Haddar, Ghrab, Jmal Hammami, Hajjaji, & Masmoudi. (2024). Assessment of job satisfaction and work ability in a confectionery factory: A Cross-Sectional Study. *European Psychiatry*, 67(S1), S596-S596. https://doi.org/10.1192/j.eurpsy.2024.1242.

Day. (2021). An empirical case study of young adult carers' engagement and success in higher education. *International Journal of Inclusive Education*, 25(14), 1597-1615. https://doi.org/10.1080/13603116.2019.1624843.

Department of Civil Affairs of Hubei Province. (2023, December 22, 2023). Public Notice on the 2023 Elderly Care Institution Rating Results in Hubei Province. *Department of Civil Affairs of Hubei Province*,. Retrieved April 14 from https://mzt.hubei.gov.cn/fbjd/zcwj/zcfg/2022gs/202312/t20231222_5012708.shtml.

DeVellis, & Thorpe. (2021). Scale development: Theory and applications. Sage publications. https://doi.org/10.4135/9781071802785.

Dieleman, & Koning. (2020). Articulating values through identity work: Advancing family business ethics research. *Journal of Business Ethics*, 163(4), 675-687. https://doi.org/10.1007/s10551-019-04380-9.

Dina, & Putra. (2022). Relationship between Family Support and Student Career Decision Making in Vocational High School. *Altruistik : Jurnal Konseling dan Psikologi Pendidikan*, 2(1). https://doi.org/10.24114/altruistik.v2i1.34437.

Djulbegovic, Doherty, Fanslau, Chen, Girgis, Joslyn, Carney, Mitchell, Etzweiler, Vogl, Cohen, Garfall, Waxman, Susanibar-Adaniya, Frosch, Long, Glanz, & Stadtmauer. (2023). A Randomized Controlled Trial of a Financial Navigation Program for Patients with Multiple Myeloma. Blood, 142(Supplement 1), 909. https://doi.org/10.1182/blood-2023-174451.

Dong, Joffre, & Song. (2022). Labor Market Conditions for Health and Elderly Care Workers in the People's Republic of China. 6, 46. https://doi.org/10.22617/wps220250-2.

Donizzetti. (2019). Ageism in an aging society: The role of knowledge, anxiety about aging, and stereotypes in young people and adults. *International Journal of Environmental Research and Public Health*, 16(8), 1329. https://doi.org/10.3390/ijerph16081329.

Dumedah, Iddrisu, Asare, Adu-Prah, & English. (2023). Inequities in spatial access to health services in Ghanaian cities. *Health Policy and Planning*, 38(10), 1166-1180. https://doi.org/10.1093/heapol/czad084.

Dunst, & Carl. (2022). Child studies through the lens of applied family social systems theory. *Child Studies,* (1), 37-64. https://doi.org/10.21814/childstudies.4126.

Dynarski, Page, & Scott-Clayton. (2023). Chapter 4 - College costs, financial aid, and student decisions. In E. A. Hanushek, S. Machin, & L. Woessmann (Eds.), Handbook of the Economics of Education (Vol. 7, pp. 227-285). *Elsevier*. https://doi.org/10.1016/bs.hesedu.2023.03.006.

EIattar, & Fonseca. (2022). Public pensions and low-income dynamics in Canada. *Journal of Pension Economics and Finance*, 22(2), 238–263. https://doi.org/10.1017/s1474747221000433.

Elliott, Quinn, Stirling, Sanderson, Robinson, Martin, & Scott. (2023). Developing the occupational communion scale: Belonging-based social connections are vital for work engagement, self-efficacy, and positive affect in aged care workforces. *The Gerontologist*, 63(6), 1028-1038. https://doi.org/10.1093/geront/gnac190,

Ettekal, & Mahoney. (2017). The SAGE encyclopedia of out-of-school learning. *Ecological Systems Theory*, 230-241. https://doi.org/10.4135/9781483385198.n94.

Ferguson, & Evans. (2019). Social ecological theory: Family systems and family psychology in bioecological and bioecocultural perspective. APA Handbook of Contemporary Family Psychology: Foundations, Methods, and Contemporary Issues Across the Lifespan, 1, 143–161. https://doi.org/10.1037/0000099-009.

Fitzpatrick, Bianchi, Hayes, Da Silva, & Harris. (2023). Professional development and career planning for nurses working in care homes for older people: A scoping review. *International journal of older people nursing*, 18(1), e12519. https://doi.org/10.1111/opn.12519.

Fletcher, & Alligood. (2022). “I definitely wouldn’t have been able to make it through college without my dad’s money”: American college students’ reflections regarding caregiver financial support. *Emerging Adulthood*, 10(6), 1497-1510. https://doi.org/10.1177/21676968211061080.

Fonseca, Bernate, Betancourt, Barón, & Cobo. (Year). Developing social responsibility in university students. In (Ed.), Book Developing social responsibility in university students (Vol. pp. 215-218). https://doi.org/10.1145/3369255.3369275.

Fornell, & Larcker. (1981). Structural equation models with unobservable variables and measurement error: Algebra and statistics. Sage publications. https://doi.org/10.1177/002224378101800104.

Fossey, Harvey, McDermott, & Davidson. (2002). Understanding and evaluating qualitative research. *Australian & New Zealand journal of psychiatry*, 36(6), 717-732. https://doi.org/10.1046/j.1440-1614.2002.01100.x.

Fouad, Cotter, Fitzpatrick, Kantamneni, Carter, & Bernfeld. (2010). Development and Validation of the Family Influence Scale. *Journal of Career Assessment*, 18(3), 276-291. https://doi.org/10.1177/1069072710364793.

French, & Clarke. (2024). Doing, being, becoming and belonging in forging professional identity: Lived experiences of occupational therapists' professional identity currently working in physical health community roles in the UK. *British Journal of Occupational Therapy*, 87(10), 614-624. https://doi.org/10.1177/03080226221148036.

Fu, Huang, Li, Zhao, & Li. (2024). Association between ageing knowledge and willingness to care for older adults among nursing students in China: the mediating role of attitude towards older adults. *Gerontology & Geriatrics Education*, 45(3), 444-457. https://doi.org/10.1080/02701960.2023.2227874.

Fu, & Xu. (2022). Motivational factors affecting the intention to volunteer in elder care agencies: a pilot study. *Innovation in Aging*, 6, 571-571. https://doi.org/10.1093/geroni/igac059.2150.

Fugard, & Potts. (2015). Supporting thinking on sample sizes for thematic analyses: a quantitative tool. *International journal of social research methodology*, 18(6), 669-684. https://doi.org/10.1080/13645579.2015.1005453.

Furukawa, Miyazawa, Kaneko, Ishiki, Arai, Ishikawa, Ohnishi, & Kuzuya. (2021). Undergraduate geriatric education in foreign countries. Nihon Ronen Igakkai zasshi. *Japanese Journal of Geriatrics*, 58(4), 570-578. https://doi.org/10.3143/geriatrics.58.570.

Gao. (2023). Influence of Parents' Career Expectations on Self-career Expectations of Middle School Students. *Lecture Notes in Education Psychology and Public Media*, 12, 226-233. https://doi.org/10.25236/LNEP.2023.12035.

Ghenta, Matei, Mladen-Macovei, & Stănescu. (2022). Quality of life of older persons: the role and challenges of social services providers. *International Journal of Environmental Research and Public Health*, 19(14), 8573. https://doi.org/10.3390/ijerph19148573.

Goet. (2022). Financial planning and behavior of students in Nepalese higher education. *Nepalese Journal of Management Science and Research*, 5, 15-26. https://doi.org/10.53056/njmsr-2022.5.1.002.

Golden. (2023). Enabling critical thinking development in higher education through the use of a structured planning tool. *Irish Educational Studies*, 42(4), 949-969. https://doi.org/10.1080/03323315.2023.2258497.

Gragnano, Simbula, & Miglioretti. (2020). Work–Life Balance: Weighing the Importance of Work–Family and Work–Health Balance. *International Journal of Environmental Research and Public Health*, 17(3), 907. https://www.mdpi.com/1660-4601/17/3/907.

Grass. (2024). The Three Logics of Qualitative Research: Epistemology, Ontology, and Methodology in Political Science. *American Journal of Qualitative Research*, 8(1), 42-56. https://doi.org/10.29333/ajqr/14083.

Grey, Baber, Corbett, Ellis, Gillison, & Barnett. (2024). The use of technology to address loneliness and social isolation among older adults: the role of social care providers. *BMC Public Health*, 24(1), 108. https://doi.org/10.1186/s12889-023-17386-w.

Guo, & Dong. (2024). Research and Innovation of a Community Intelligent Pension Service System: Taking Longhua District, Shenzhen, China, as an Example. *Journal of Computer Science and Technology Studies*, 6(2), 71-75. https://doi.org/10.32996/jcsts.2024.6.2.8.

Hadiyati, & Astuti. (2023). Student Careers: What Factors Influence Career Choice? *Journal of Education Research and Evaluation*, 7, 608-614. https://doi.org/10.23887/jere.v7i4.61686.

Hailu, Abdelkader, Meles, & Teklu. (2024). Understanding the support needs and challenges faced by family caregivers in the care of their older adults at home. A qualitative study. *Clinical Interventions in Aging*, 481-490. https://doi.org/10.2147/CIA.S451833.

Han. (2023). How can the Elderly Association better participate in rural mutual aid elderly care. *Academic Journal of Management and Social Sciences*, 5(3), 187-193. https://doi.org/10.54097/dwzxe9mq.

Han, He, Lyu, Yu, Bian, & Lee. (2020). Aging in China: perspectives on public health. 4(1), 11-17.

Han, & Zhang. (2023). The Influence of Parental Career Support on Career Adaptability of Vocational College Students. 5, 30-34. https://doi.org/10.23977/avte.2023.050506.

Han, & Zhou. (2023). No pension, no happiness?—Financial support expectation in the oldest-old age and depressive symptoms. *Innovation in Aging*, 7(Suppl 1), 502-503. https://doi.org/10.1093/geroni/igad104.1651.

Hansson, Björklund Carlstedt, & Morville. (2022). Occupational identity in occupational therapy: A concept analysis. *Scandinavian journal of occupational therapy*, 29(3), 198-209. https://doi.org/10.1080/11038128.2021.1948608.

Harten, Cuyper, Knies, Forrier, & Anneleen. (2022). Taking the temperature of employability research: A systematic review of interrelationships across and within conceptual strands. *European Journal of Work and Organizational Psychology*, 31(1), 145-159. https://doi.org/10.1080/1359432X.2021.1942847.

Hartung, Katarina, & and Hillmert. (2022). Interplay between family background and labour-market conditions in shaping students' occupational status expectations. *Journal of Education and Work*, 35(4), 405-421. https://doi.org/10.1080/13639080.2022.2073338.

Hasim, Umar, Amiruddin, & Sinring. (2023). Career Commitment Based on Career Identity Diffusion among Students in Vocational Higher Education. *Journal of Innovation in Educational and Cultural Research*, 4(2), 220-228. https://doi.org/10.46843/jiecr.v4i2.536.

Hassock, & Hill. (2022). Employability and employment: The role of higher education in a rapidly changing world. In Higher education and job employability (Vol. 10, pp. 155-178). Springer, Cham. https://doi.org/10.1007/978-3-031-05716-8_8.

Havreng-Théry, Oquendo, Zolnowski-Kolp, Krolak-Salmon, Bertin-Hugault, Lafuente-Lafuente, & Belmin. (2024). Cholinesterase inhibitors and memantine are associated with a reduced mortality in nursing home residents with dementia: a longitudinal observational study. *Alzheimer's Research & Therapy*, 16: 117. https://doi.org/10.1186/s13195-024-01481-0.

He, Mao, Cao, Li, Wu, & Yang. (2024). Factors influencing the development of nursing professionalism: a descriptive qualitative study. *BMC nursing*, 23: 283. https://doi.org/10.1186/s12912-024-01945-6.

Helens-Hart. (2019). The Employability Self-Assessment: Identifying and Appraising Career Identity, Personal Adaptability, and Social and Human Capital. *Management Teaching Review*, 4(1), 6-13. https://doi.org/10.1177/2379298118775937.

Henninger, Plieninger, & Meiser. (2023). The Effect of Response Formats on Response Style Strength. *European Journal of Psychological Assessment*, 41(1), 72–88. https://doi.org/10.1027/1015-5759/a000779.

Hinduja, Fakir Mohammad, & Siddiqui. (2024). Factors influencing students' academic self-efficacy in related domains. *Sage Open*, 14(4), 21582440241289738. https://doi.org/10.1177/21582440241289738.

Ho, Le, Nguyen, Nguyen, & Nguyen. (2023). Effects of career development learning on students' perceived employability: a longitudinal study. *Higher Education*, 86(2), 297-315. https://doi.org/10.1007/s10734-022-00933-6.

Hofer, Zhivkovikj, & Smyth. (2020). The role of labour market information in guiding educational and occupational choices. *OECD Education Working Papers,* (229), 1-58. https://doi.org/10.2147/CIA.S451833.

Houle, Morin, & Fernet. (2022). Longitudinal trajectories of affective commitment to the occupation among school principals: A person-centered perspective. *Journal of Vocational Behavior*, 137, 103758. https://doi.org/10.1016/j.jvb.2022.103758.

Howes, & Ellison. (2022). Understanding the occupational identity of care-givers for people with mental health problems. *British Journal of Occupational Therapy*, 85(4), 274-282. https://doi.org/10.1177/03080226211018153.

Hromadzic, & Popović. (2019). The Social Construction of Reality - canonical work of integrative sociological theories. Contexts, analysis, perspectives. *Bulletin de l'Institut etnographique*, 67(1), 33-43. https://doi.org/10.2298/gei1901033h.

Hsieh, Wu, Tsai, Lin, & Sun. (2021). Establishing Core Competencies and a Professional Curriculum for the Care Service Department in Vocational High Schools in Taiwan. *International Journal of Environmental Research and Public Health*, 19: 1009. https://doi.org/10.3390/ijerph19021009

Hu, Lyu, Pan, & Xu. (2023). The influence of the gender equality in family education on female's future career choices. *J Educ Humanit Soc Sci*, 8, 1726-1733. https://doi.org/10.54097/ehss.v8i.4564.

Hu, Wang, Lan, & Wu. (2022). Nurses' turnover intention, hope and career identity: the mediating role of job satisfaction. *BMC nursing*, 21: 43. https://doi.org/10.1186/s12912-022-00821-5.

Hua. (2024). Emotional Support from Care Recipients, Caring Relationship Quality, and Caregiving Self-Efficacy among Family Caregivers of Older Adults. *Journal of Gerontological Social Work*, 67, 558-574. https://doi.org/10.1080/01634372.2024.2338088.

Huang, & Dai. (2024). How to Improve the Performance of Elderly Care facility Embedded in Communities？—Case Study from Two Districts of Hangzhou, China. *Advances in Economic Development and Management Research*, 2(1), 182. https://doi.org/10.61935/aedmr.2.1.2024.p182.

Huang, & Espeso. (2024). The Vocational Ability, Vocational Motivation and Professional Identity of Xiamen University Teachers. *International Journal of Education and Humanities*, 15(3), 170-173. https://doi.org/10.54097/3svpar20.

Huang, Huang, Wang, Zhang, Fei, Tang, & Wang. (2023). Factors influencing parent-child relationships in chinese nurses: a cross-sectional study. *BMC nursing*, 22(1), Article 144. https://doi.org/10.1186/s12912-023-01413-7.

Huang, Qiao, Song, & Yan. (2022). How Does the Social Support Influence Junior College Students' Occupational Identity in Pre-school Education? [Original Research]. *Frontiers in Psychology*, 13: 884606. https://doi.org/10.3389/fpsyg.2022.884606.

Huang, Zhou, Li, Huang, Pan, Pan, Pan, & Lai. (2024). Survey on the Current Status of Elderly Health Services in 1,305 Medical Institutions in Guangxi. *Risk management and healthcare policy*, 17, 2547-2556. https://doi.org/10.2147/RMHP.S475319.

Huanggang Polytechnic College. (2024). Huanggang Polytechnic College. Retrieved July 15 from https://www.hbhgkj.edu.cn/.

Hubei College of Chinese Medicine. (2024). Hubei College of Chinese Medicine. Retrieved July 15 from https://www.hbucm.edu.cn/.

Hubei Health Vocational College. (2024). Hubei Health Vocational College. Retrieved July 15 from https://hbjk.chunlaiedu.com/.

Hubei Provincial Bureau of Statistics. (2023). Hubei Statistical Yearbook. https://tjj.hubei.gov.cn/tjsj/sjkscx/tjnj/qstjnj/index.shtml.

Huebner, & Fickling. (2023). Family Belief Systems: A Proposed Typology and Applications. *The Family Journal*, 31, 376-384. https://doi.org/10.1177/10664807231157020.

Hulko, Mahara, Wilson, & Campbell-McArthur. (2021). Culturally safe dementia care: Building nursing capacity to care for First Nation Elders with memory loss. *International journal of older people nursing*, 16(2): e12395. https://doi.org/10.1111/opn.12395.

Human Resources and Social Security Information Network. (2024). Survey Report on the Status of Elderly Care Service Personnel. https://www.hrssit.cn/info/3244.html.

Hung. (2022). Smart elderly care services in China: challenges, progress, and policy development. *Sustainability*, 15(1): 178. https://doi.org/10.3390/su15010178.

Hunt. (2021). Integrating digital health technology to alleviate caregiver burden. *Applied Research Projects*, 77. https://doi.org/10.21007/chp.hiim.0074.

Inavatin, Muarifah, & Hidayah. (2020). Internal and external predictors of vocational high school students' employability: The role and functions of school counselors. *PSIKOPEDAGOGIA Jurnal Bimbingan dan Konseling*, 9(2), 84–93. https://doi.org/10.12928/psikopedagogia.v9i2.19280.

Ingram. (2023). Exploring the Meaning of Dementia Grief in Spousal Caregivers: A Qualitative Study [Master, University of Colorado Colorado Springs].

Iruka, DeKraai, Walther, Sheridan, & Abdel-Monem. (2020). Examining how rural ecological contexts influence children's early learning opportunities. *Early Childhood Research Quarterly*, 52(Part B), 15-29. https://doi.org/10.1016/j.ecresq.2019.09.005.

Isa, Noor, & Mohammad. (2023). Critical issues of human resource management in ageing care centres: Case of Malaysia. *Journal of Health Management*, 25, 382-392. https://doi.org/10.1177/09720634231175956.

Itoh, Mori, Jin, Ito, Komiyama, Kuroda, Uda, Tsuchiya-Ito, Wu, & Kodama. (2024). Outcomes of advanced care management in home-based long-term care: A retrospective population-based observational study. *International Journal of Nursing Studies*, 158: 104862. https://doi.org/10.1016/j.ijnurstu.2024.104862.

Jagielska. (2024). Importance of family support in planning educational and professional careers by young adults from Generation Z. *Studia z Teorii Wychowania*, 2(47), 201-215. https://doi.org/10.5604/01.3001.0054.6572.

Jamil. (2024). Impacts of fear and regret on university students' career choices under uncertainty: A case study University of Malakand. *Review of Law and Social Sciences*, 2(4), 43-52. https://reviewlawsocialsciences.com/index.php/rlss/article/view/37.

Jang, Stephan, Ross, Jeong, & Mogle. (2024). Family relationship quality and psychological and cognitive health among grandparent caregivers: The moderating role of co-residence with adult children. *Journal of Social and Personal Relationships*, 42(3), 794-817. https://doi.org/10.1177/02654075241307976.

Jarling, Rydström, Ernsth Bravell, Nyström, & Dalheim-Englund. (2020). Perceptions of professional responsibility when caring for older people in home care in Sweden. *Journal of Community Health Nursing*, 37(3), 141-152. https://doi.org/10.1080/07370016.2020.1780649.

Jin, Zhao, & Gootjes. (2024). The influence of family cultural capital on higher vocational school admission opportunities: A case study in China. *Equity in Education & Society*, Article 27526461241306117. https://doi.org/10.1177/27526461241306117.

Johanson, & Brooks. (2010). Initial scale development: sample size for pilot studies. *Educational and psychological measurement*, 70(3), 394-400. https://doi.org/10.1177/0013164409355692.

Johnson, & Ridgeway. (2023). Becoming independent and responsible adults: Does parental financial help interfere? *Journal of Family Issues*, 45, 571 - 591. https://doi.org/10.1177/0192513X231155600.

Jones, Torres, & Arminio. (2021). Negotiating the complexities of qualitative research in higher education: Essential elements and issues(3rd ed.). Routledge. https://doi.org/10.4324/9781003090694.

Jun. (2022). Research on the Current Characteristics and Countermeasures of Population Aging-A Case Study of Linyi City. *Management Studies*, 10(4), 256-261. https://doi.org/10.17265/2328-2185/2022.04.006.

Justyna, Plebańska, & Wójcik-Jurkiewicz. (2023). University students' perception of employability and workability skills for the workplace in the digital era. *Scientific Journal of Bielsko-Biala School of Finance and Law*, 27(4), 39-45. https://doi.org/10.19192/wsfip.sj4.2023.5.

Kaiser, & Rice. (1974). Little jiffy, mark IV. *Educational and psychological measurement*, 34(1), 111-117. https://doi.org/10.1177/001316447403400115.

Kamio, & Espinoza. (2023). Projecting home nurse workforce needs for the next two decades for the super-aging population of Japan. *Geriatrics & Gerontology International*, 23(7), 575–576. https://doi.org/10.1111/ggi.14595.

Kang, & Jing. (2022). The relationship between occupational values and career decision-making difficulties of college students: The mediating role of professional identity. *Journal of Social Science and Humanities*, 4(07): 32. https://doi.org/10.53469/jssh.2022.4(07).32.

Kang, Li, Chen, & Bao. (2024). Parental involvement, academic self-efficacy, and depression on academic performance among Chinese students during COVID-19 pandemic. *Psychology Research and Behavior Management*, 17, 201-216. https://doi.org/10.2147/PRBM.S447485.

Kanios. (2021). Beliefs of secondary school youth and higher education students about elderly persons: A comparative survey. *Child and Adolescent Social Work Journal*, 38, 131-137. https://doi.org/10.1007/s10560-020-00727-8.

Katz, Cohen, Green-Cohen, & Morsiano-davidpur. (2018). Parental support for adolescents' autonomy while making a first career decision. *Learning and Individual Differences*, 65, 12-19. https://doi.org/10.1016/j.lindif.2018.05.006.

Khanal, & Chhetri. (2024). A pilot study approach to assessing the reliability and validity of relevancy and efficacy survey scale. *Janabhawana Research Journal*, 3(1), 35-49. https://doi.org/10.3126/jrj.v3i1.68384.

Khwarizmi, & Khwarazmita. (2022). Understanding How Management Students Choose their Career. *Journal of Career and Entrepreneurship*, 1(2), 1-10. https://doi.org/10.22219/jce.v1i2.22607.

Kilaberia. (2020). Organizational Commitment Among Residential Senior Care Workers. *Innovation in Aging*, 4, 21-21. https://doi.org/10.1093/geroni/igaa057.068.

Kim. (2014). Family Background, Students' Academic Self-Efficacy, and Students' Career and Life Success Expectations. *International Journal for the Advancement of Counselling*, 36(4), 395-407. https://doi.org/10.1007/s10447-014-9216-1.

Kim. (2023). Access to employer-provided paid leave and eldercare provision for older workers. *Community, Work & Family*, 26(3), 285-291. https://doi.org/10.1080/13668803.2021.1885346.

Kim, & Joyce. (2024). A Moral Dilemma of "Selling Out": Race, Class, and Career Considerations among Elite College Students. *Social Problems*. https://doi.org/10.1093/socpro/spae056.

Kim, Park, Bang, Bae, Bae, & Jin. (2024). Factors Affecting Nursing Students Attitudes toward the Elderly with Dementia. *Journal of the Korea Academia-Industrial cooperation Society*, 25(3), 467-474. https://doi.org/10.5762/KAIS.2024.25.3.467.

Kim, & Yoon. (2022). Longitudinal associations between expectations of receiving care in the future and life satisfaction among older adults in Korea. *The Journals of Gerontology: Series B*, 77(3), 604-614. https://doi.org/10.1093/geronb/gbab001.

Kir, Sarpong, Dazagbyilo, & Boukari. (2021). Research on the effects of influencing factors of international students on employability: A case study in China. *Open Journal of Business and Management*, 9(4), 1942-1964. https://doi.org/10.4236/ojbm.2021.94099.

Koçak, Ak, Erdem, Sinan, Younis, & Erdoğan. (2021). The Role of Family Influence and Academic Satisfaction on Career Decision-Making Self-Efficacy and Happiness. *International Journal of Environmental Research and Public Health*, 18(11): 5919. https://doi.org/10.3390/ijerph18115919.

Kock, & Hadaya. (2018). Minimum sample size estimation in PLS-SEM: The inverse square root and gamma-exponential methods. *Information systems journal*, 28(1), 227-261.

Kong, Okumus, & Bu. (2019). Linking organizational career management with Generation Y employees' organizational identity: The mediating effect of meeting career expectations. *Journal of Hospitality Marketing & Management*, 29(2), 164-181. https://doi.org/10.1080/19368623.2019.1616644.

Koninsky. (2023). On the relationship between demographic development and professional mobility. *Scientific notes of the Russian academy of entrepreneurship*, 22(1), 61-64. https://doi.org/10.24182/2073-6258-2023-22-1-61-64.

Kosar. (2023). Demographic shifts and social implications: The sociological consequences of aging populations in developed countries. *Pakistan Journal of International Affairs*, 6(3). https://doi.org/10.52337/pjia.v6i3.1027.

Kossek, Perrigino, & Rock. (2021). From ideal workers to ideal work for all: A 50-year review integrating careers and work-family research with a future research agenda. *Journal of Vocational Behavior*, 126: 103504. https://doi.org/10.1016/j.jvb.2020.103504.

Kumar, Singh, & Vishwakarma. (2020). An Efficient Survey Technique for Estimating the Proportion and Sensitivity Attributes in a Dichotomous Finite Population. *Proceedings of the National Academy of Sciences, India Section A: Physical Sciences*, 90, 281-287. https://doi.org/10.1007/S40010-018-0585-4.

Lawless, Tieu, Golley, & Kitson. (2024). How and where does "care" fit within seminal life-course approaches? A narrative review and critical analysis. *Journal of Advanced Nursing*, 80(3), 871-883. https://doi.org/10.1111/jan.15852.

Lee, & Yu. (2023). Socioeconomic diversity in the hospitality industry: the relationship between social class background, family expectations and career outcomes. *International Journal of Contemporary Hospitality Management*, 35(11), 3844-3863. https://doi.org/10.1108/IJCHM-01-2023-0033.

Leighton, Kardong-Edgren, Schneidereith, & Foisy-Doll. (2021). Using social media and snowball sampling as an alternative recruitment strategy for research. *Clinical simulation in nursing*, 55, 37-42. https://doi.org/10.1016/j.ecns.2021.03.006.

Lemon. (2023). Student Loans, Persistence, and Well-being: The Need to Support Single Mothers in College: A Qualitative Study West Chester University]. https://digitalcommons.wcupa.edu/all_doctoral/199.

Li, Gan, Yang, Jiang, Lu, Zhou, Nie, Opoku, Zheng, & Yu. (2020). Analysis on professional identity and related factors among Chinese general practitioners: a National Cross-sectional Study. *BMC Family Practice*, 21: 80. https://doi.org/10.1186/s12875-020-01155-4.

Li, Li, , & Huang. (2022). Spatial-temporal analysis of urban-rural differences in the development of elderly care institutions in China. *Frontiers in Public Health*, 10: 1086388. https://doi.org/10.3389/fpubh.2022.1086388.

Li, Liu, & Zhu. (2025). Impact of Professional Competency on Occupational Identity of Preschool Education Publicly Funded Teacher Trainees: The Moderating Role of Support from Significant Others. *Sustainability*, 17(1), 242. https://doi.org/10.3390/su17010242.

Li, Tang, Li, Jiang, Liu, & Wang. (2021). The influence of family function on occupational attitude of Chinese nursing students in the probation period: the moderation effect of social support. *Journal of Korean Academy of Nursing*, 51(6), 746-757. https://doi.org/10.4040/jkan.21103.

Li, & Zhong. (2022). Research on the Impact of Family Capital on College Students' Employment. *International Journal of New Developments in Education*, 4(9), 15-24. https://doi.org/10.25236/ijnde.2022.040904.

Liang, Adenan, Azman, & Kassymova. (2023). Research on the retention factors of interns majoring in elderly care service in Chinese higher vocational colleges: based on a qualitative comparative analysis method (QCA). *Perspectives of Science and Education*, 65(5), 704-719. https://doi.org/10.32744/pse.2023.5.41.

Lien, Hsieh, & Huang. (2021). A Dichotomous Relationship of Intergenerational Caregiving within Elderly Care: Disruption/Disharmony and Connection/ Harmony Across the Generations. *International Journal of Nursing & Clinical Practices*, 8(1), Article 8: IJNCP-352. https://doi.org/10.15344/2394-4978/2021/352.

Lim, Yong, Breen, Keesing, & Buchanan. (2024). Occupations of Terminally Ill Chinese Older Adults and Their Caregivers in Singapore: A Qualitative Exploratory Study. *Omega-Journal of Death and Dying*, 90(2), 575-593. https://doi.org/10.1177/00302228221108288.

Lin, & Chen. (2021). Experiencing career plateau on a committed career journey: A boundary condition of career stages. *Personnel Review*, 50(9), 1797-1819. https://doi.org/10.1108/pr-03-2020-0192.

Liu, Agudamu, Bu, Akpinar, & Jabucanin. (2022). The association between the China's economic development and the passing rate of national physical fitness standards for elderly people aged 60–69 from 2000 to 2020. *Frontiers in Public Health*, 10: 857691. https://doi.org/10.3389/fpubh.2022.857691.

Liu, Chen, Lv, & Failler. (2023). The impact of population aging on economic growth: a case study on China. *AIMS mathematics*, 8(5), 10468-10485. https://doi.org/10.3934/math.2023531.

Liu, & Dai. (2022). Rural vitalization promoted by industrial transformation under globalization: The case of Tengtou village in China. *Journal of Rural Studies*, 95, 241-255. https://doi.org/10.1016/j.jrurstud.2022.09.020.

Lomax. (2004). A beginner's guide to structural equation modeling. psychology press.

Long, Gardner, Hodgkin, & Lehmann. (2024). Developing social work professional identity resilience: Seven protective factors. *Australian Social Work*, 77(2), 214-227. https://doi.org/10.1080/0312407X.2022.2160265.

Lun. (2022). College students' experiences providing care for older family members. *Educational Gerontology*, 48(3), 132-143. https://doi.org/10.1080/03601277.2021.2022077.

Luo, Su, & Zheng. (2021). Trends and challenges for population and health during population aging—China, 2015–2050. *China CDC weekly*, 3(28): 593. https://doi.org/10.46234/ccdcw2021.158

MacDougall Ms. (2023). Relational Variables Impacting the Healthcare Team Western University]. https://ir.lib.uwo.ca/etd/9647.

Manyani, Biggs, Hill, & Preiser. (2024). The evolution of social-ecological systems (SES) research: A co-authorship and co-citation network analysis. *Ecology and Society*, 29(1): 33. https://doi.org/10.5751/ES-14694-290133.

Mazurik, Williamson, & Knudson. (2023). Socioeconomic differences in parental financial support, coresidence, and advice: A portrait of undergraduate students in the Canadian Prairies. *Canadian Review of Sociology/Revue canadienne de sociologie*, 60(3), 479-501. https://doi.org/10.1111/cars.12436.

McGarry, & Grabowski. (2021). Nursing homes and COVID-19: a crisis on top of a crisis. *The Annals of the American Academy of Political and Social Science*, 698(1), 137-162. https://doi.org/10.1177/00027162211061509.

Medeiros, Barbosa, Alves, & Gratão. (2022). Work-family balance among caregivers of elderly people: A systematic review. *Cadernos Brasileiros de Terapia Ocupacional*, 30, e3154. https://doi.org/10.1590/2526-8910.ctoar241831542.

Melchiorre, D'Amen, Quattrini, Lamura, & Socci. (2022). Caring for Frail Older People Living Alone in Italy: Future Housing Solutions and Responsibilities of Family and Public Services, a Qualitative Study. *International Journal of Environmental Research and Public Health*, 19. https://doi.org/10.3390/ijerph19127413.

Min, Yichao, & Hailing. (2021). An Empirical Research on Construct and Influencing Factors of College Students' Blended Learning Power Based on SPSS 22 software and AMOS 24.0 software. In 2021 2nd International Conference on Artificial Intelligence and Education (ICAIE) (pp. 425-431). IEEE.

Ministry of Education of the People's Republic of China. (2019). Opinions of the General Office of the Ministry of Education and other seven departments on supporting the development of social service industries. Ministry of Education of the People's Republic of China,. Retrieved April 12 from https://www.gov.cn/xinwen/2019-10/09/content_5437395.htm.

Moll-Jongerius, Langeveld, Helmich, Masud, Kramer, & Achterberg. (2023). Becoming a physician for older patients: exploring the professional identity formation of medical students during a nursing home clerkship. A qualitative study. *BMC Medical Education*, 23(1), 845. https://doi.org/10.1186/s12909-023-04636-4.

Moneva, & Jumag. (2020). Satisfaction with Financial Support and Students' Determination in Learning. *Asia Pacific Journal of Academic Research in Social Sciences*, 5(1), 49-56.

Monteiro, Almeida, Gomes, & Sinval. (2020). Employability profiles of higher education graduates: a person-oriented approach. *Studies in Higher Education*, 47(3), 499-512. https://doi.org/10.1080/03075079.2020.1761785.

Moores, & Burgess. (2023). Financial support differentially aids retention of students from households with lower incomes: a UK case study. *Studies in Higher Education*, 48(1), 220-231. https://doi.org/10.1080/03075079.2022.2125950.

Morse. (2000). Determining sample size. 10(1), 3-5. https://doi.org/10.1177/104973200129118183.

Moser. (2004). Quota Sampling (D. a. H. Cramer, D., Ed.). SAGE Publications, Ltd. https://doi.org/10.4135/9780857020123.n459.

Mostafapour, Eskandari, Borjali, Sohrabi, & Asgari. (2025). A Narrative Exploration of Transformation of Moral, Social and Cultural Values among Generation Z in the Context of Marriage. *International Journal of Ethics and Society*, 6(4), 40-55. https://doi.org/10.22034/ijethics.6.4.40.

Mu, Guo, & Wang. (2022). Optimal Subsidy Support for the Provision of Elderly Care Services in China Based on the Evolutionary Game Analysis. *International Journal of Environmental Research and Public Health*, 19(5), 2800. https://www.mdpi.com/1660-4601/19/5/2800.

Mushtaq, & Khan. (2024). Social isolation, loneliness, and mental health among older adults during COVID-19: a scoping review. *Journal of Gerontological Social Work*, 67(2), 143-156. https://doi.org/10.1080/01634372.2023.2237076.

Nagata, Tsutsumi, Kiyonaga, & Nogaki. (2021). Evaluation of a training program for community-based end-of-life care of older people toward aging in place: a mixed methods study. *Nurse Education in Practice*, 54: 103091. https://doi.org/10.1016/j.nepr.2021.103091.

National Bureau of Statistics of China. (2023). China Statistical Yearbook. https://www.stats.gov.cn/sj/ndsj/2023/indexeh.htm.

Ng, & Indran. (2021). Societal perceptions of caregivers linked to culture across 20 countries: Evidence from a 10-billion-word database. *PLoS ONE*, 16(5): e0251161. https://doi.org/10.1371/journal.pone.0251161.

Ng, Mat Din, Zakaria, Inche Mat, Wan Zukiman, Md Shah, Daut, & Sallehuddin. (2021). Implementation of a Healthcare of Elderly Course With Multi-Professional Teachers for Undergraduate Medical Students in a Public University in Malaysia-A Quasi-Experimental Pre and Post Study. *Frontiers in Public Health*, 9: 743804. https://doi.org/10.3389/fpubh.2021.743804.

Ng, Wut, & Chan. (2022). Enhancing perceived employability through work-integrated learning. Education Training, 64(4), 559-576. https://doi.org/10.1108/ET-12-2021-0476

Niesyty. (2020). Supporting family as a form of family support. *Praca Socjalna*, 35(6), 35-44. https://doi.org/10.5604/01.3001.0014.5736.

Nnaemeka, & Chinwe. (2022). Ensuring ethical approach to research. *Magna Scientia Advanced Research and Reviews*, 6(1), 046-050. https://doi.org/10.30574/msarr.2022.6.1.0065.

Noble, & Heale. (2019). Triangulation in research, with examples. 22(3), 67-68. https://doi.org/10.1136/ebnurs-2019-103145.

Nur, Margarida, & Cale. (2024). The Effect of a Collaborative Approach in Management of Chronic Diseases in the Elderly: Case Study at a Community Health Center. *Journal of World Future Medicine, Health and Nursing*, 2(3), 519–530. https://doi.org/10.70177/health.v2i3.1046.

Ojo, & Olufunke. (2019). Environmental Variables and Career Choice of Secondary School Students in Osun State Nigeria. *AARN: Religious Practices (Sub-Topic)*, 8(3). https://doi.org/10.5281/zenodo.3456778.

Olike, Mabroka, Saad El Deen Mohamed, & Mohamed. (2020). Social responsibility and relation to the quality of services provided to the elderly. *Egyptian Journal of Social Work*, 10(1), 149-169. https://doi.org/10.21608/ejsw.2020.24492.1084.

Olson, Ozaki, & Johnston-Guerrero. (2023). Recentering the individual in context using the Phenomenological Variant of Ecological Systems Theory: Applications for higher education. *New Directions for Higher Education*, 2023(204), 83-92. https://doi.org/10.1002/he.20486.

Owen, Berry, & Brown. (2022). Enhancing older adults' well-being and quality of life through purposeful activity: A systematic review of intervention studies. *The Gerontologist*, 62(6), e317-e327. https://doi.org/10.1093/geront/gnab017.

Ozaydin, Kocoglu-Tanyer, & Akın. (2023). Normative solidarity and compassion as determinants of ageism in nursing students: An analysis of mediation and moderation. *Collegian*, 30(2), 400-406. https://doi.org/10.1016/j.colegn.2022.11.004.

Park, Chun, & Kwon. (2021). Mediation effects of clinical practice stress between clinical education environment and satisfaction with clinical practice. *Korean Journal of Medical Education*, 33(1), 27-36. https://doi.org/10.3946/kjme.2021.184.

Pashaei, Hassani, Mohajeran, & Shahbazi. (2023). Analyzing the effect of economics education on students' financial literacy and decision-making with the moderating role of the family's socio-economic status. *Quarterly Journal of Research and Planning in Higher Education*, 29(4), 19-35. https://doi.org/10.61838/kman.irphe.29.4.2.

Pazan, & Wehling. (2021). Polypharmacy in older adults: a narrative review of definitions, epidemiology and consequences. *European geriatric medicine*, 12, 443-452. https://doi.org/10.1007/s41999-021-00479-3.

Peng. (2021). The difference of family value between China and America. *Social Sciences*, 10(5), 218–221. https://doi.org/10.11648/j.ss.20211005.12.

Perkins, Benedict, Rohde, Godwin, Washington, & Castillo. (2021). Understanding How Family Influences and Support Students' Certainty of Engineering Major. *2021 IEEE Frontiers in Education Conference (FIE)*, 1-7. https://doi.org/10.1109/FIE49875.2021.9637191.

Peterson. (1994). A meta-analysis of Cronbach's coefficient alpha. *Journal of consumer research*, 21(2), 381-391. https://doi.org/10.1086/209405.

Pillemer, Nolte, & Tillema Cope. (2022). Promoting climate change activism among older people. *Generations*, 46(2), 1-16. https://www.jstor.org/stable/48697100.

Pivoriutė. (2024). “How do I find myself, become successful, financially independent and experience the joys of youth?” Experiences of quarter-life crisis among Lithuanian students [Doctoral dissertation, Vilniaus universitetas]. https://epublications.vu.lt/object/elaba%3A195471406/.

Podsakoff, MacKenzie, Lee, & Podsakoff. (2003). Common method biases in behavioral research: A critical review of the literature and recommended remedies. *Journal of Applied Psycholog*, 88(5), 879–903. https://doi.org/10.1037/0021-9010.88.5.879.

Poonprapai, & Lerkiatbundit. (2021). Family support-based intervention using a mobile application by pharmacists for older adults with diabetes: A randomised controlled trial. https://doi.org/10.1007/s11096-022-01389-5.

Prasetia, Yunus, Nirwana, Afdal, Syukur, Iswari, & Fikri. (2024). Family Education: Instilling Career Expectations for Woman. *Journal of Education and Learning (EduLearn)*, 18(2), 271-278. https://doi.org/10.11591/edulearn.v18i2.21153.

Prasetya, & Soetjipto. (2023). Burnout as Mediateer of The Influence of Organizational Support and Family Support on Job Stress at KSPPS Tunas Artha Mandiri. *Economics and Business Journal (ECBIS)*, 1(4), 293-304. https://doi.org/10.15388/vu.thesis.597.

Preacher, & Hayes. (2004). SPSS and SAS procedures for estimating indirect effects in simple mediation models. *Behavior research methods, instruments, & computers*, 36, 717-731. https://doi.org/10.3758/BF03206553.

Quinaud, Backes, da Silva, do Nascimento, Ramos, & Milistetd. (2018). Construção e validação do conteúdo do questionário dos conhecimentos e competências do treinador-QCCT. *Revista Brasileira de Cineantropometria e Desempenho Humano*, 20(3), 318-331. https://doi.org/10.5007/1980-0037.2018V20N3P318.

Rajovic, Zagorac, Cirkovic, Matejic, Jeremic, Tasic, Cumic, Masic, Grupkovic, & Mitrovic. (2024). Musculoskeletal Diseases as the Most Prevalent Component of Multimorbidity: A Population-Based Study. *Journal of Clinical Medicine*, 13(11), 3089. https://doi.org/10.3390/jcm13113089.

Ratnaningsih, & Sawitri. (2020). Paths from Proactive Personality and Family Influence to Employability. *Jurnal Ilmiah Peuradeun*, 8(3), 587-600. https://doi.org/10.26811/peuradeun.v8i3.514.

Reid, Richards, & Willox. (2021). Connecting experiences to employability through a meaning-making approach to learning. *Journal of Teaching and Learning for Graduate Employability*, 12(2), 99-113. https://doi.org/10.3316/informit.028819538972753.

Reyes, Bogumil, & Welch. (2024). The living codebook: Documenting the process of qualitative data analysis. *Sociological Methods & Research*, 53(1), 89-120. https://doi.org/10.1177/0049124120986185.

Reynolds, F, Jeste, Sachdev, & Blazer. (2022). Mental health care for older adults: recent advances and new directions in clinical practice and research. *World Psychiatry*, 21(3), 336-363. https://doi.org/10.1002/wps.20996.

Riazi, Ghanbar, & Rezvani. (2023). Qualitative data coding and analysis: A systematic review of the papers published in the Journal of Second Language Writing. *Iranian Journal of Language Teaching Research*, 11(1), 25-47. https://doi.org/10.30466/ijltr.2023.121271.

Ritchie, Hannah, Roser, & Max. (2024, February 2024). Age Structure. *Our World in Data*. https://ourworldindata.org/age-structure.

Rofcanin, Las Heras, Escribano, & Stanko. (2020). FSSBs and elderly care: Exploring the role of organizational context on employees' overall health and work–family balance satisfaction. *Journal of Business and Psychology*, 35(3), 403-419. https://doi.org/10.1007/s10869-019-09629-8.

Roksa, & Kinsley. (2019). The role of family support in facilitating academic success of low-income students. *Research in Higher Education*, 60, 415-436. https://doi.org/10.1007/s11162-018-9517-z.

Rosenzweig, & Chen. (2023). Which STEM careers are most appealing? Examining high school students' preferences and motivational beliefs for different STEM career choices. *International Journal of STEM Education*, 10(1): 40. https://doi.org/10.1186/s40594-023-00427-6.

Ruggiano, Brown, Clarke, Hristidis, Roberts, Framil Suarez, Allala, Hurley, Kopcsik, Daquin, Chevez, Chang-Lau, Agronin, & Geldmacher. (2024). An Evidence-Based IT Program With Chatbot to Support Caregiving and Clinical Care for People With Dementia: The CareHeroes Development and Usability Pilot. *JMIR aging*, 7: e57308. https://doi.org/10.2196/57308.

Sabri, Gudmunson, Griesdorn, & Dean. (2020). Influence of Family Financial Socialization on Academic Success in College. *Journal of Financial Counseling and Planning*, 31, 267-283. https://doi.org/10.1891/jfcp-18-00052.

Şahin, Doğan, Okur, & Şahin. (2022). Emotional outcomes of e-learning adoption during compulsory online education. *Education and Information Technologies*, 27(6), 7827-7849. https://doi.org/10.1007/s10639-022-10930-y.

Salwani, & Cahyawulan. (2022). The relationship between family social support and self-efficacy in career decision-making of final year university students. *ENLIGHTEN: Jurnal Bimbingan Konseling Islam*, 5(1), 25-36. https://doi.org/10.32505/enlighten.v5i1.3919.

Samson, Maisonneuve, Atitsogbe, Saint-Georges, & Chénier-Ayotte. (2024). Career Development Support, Career-Related Internet Information Search and Usefulness, and Career Decision-Making Difficulties in 12th Grade Students in Ontario. *Canadian Journal of Career Development*, 23(2). https://doi.org/10.53379/cjcd.2024.396.

Scheepers, & Ellemers. (2019). Social Identity Theory. In K. Sassenberg & M. L. W. Vliek (Eds.), Social Psychology in Action: Evidence-Based Interventions from Theory to Practice (pp. 129-143). Springer International Publishing. https://doi.org/10.1007/978-3-030-13788-5_9.

Schram, Flores-Scott, & Clasing-Manquian. (2023). Demographic characteristics of participants in graduate college professional and sociocultural development programming. *Studies in Graduate and Postdoctoral Education*, 14(2), 201-218. https://doi.org/10.1108/sgpe-05-2022-0033.

Selvakumar, & Poongodi. (2024). Career Bot for Career Prediction of Higher Secondary Students using Decision Tree. *International Journal of Advanced Research in Science, Communication and Technology*, 4(5). https://doi.org/10.48175/ijarsct-18414.

Shamsikhani, Ahmadi, Kazemnejad, & Vaismoradi. (2021). Typology of family support in home care for Iranian older people: a qualitative study. *International Journal of Environmental Research and Public Health*, 18(12), 6361. https://doi.org/10.3390/ijerph18126361.

Shan. (2021). Philosophical foundations of mixed methods research. *Philosophy Compass*, 16(11): e12804. https://doi.org/10.1111/phc3.12804.

Sheppard, Hood, & Creed. (2020). An identity control theory approach to managing career identity in emerging adults. *Emerging Adulthood*, 8(5), 361-366. https://doi.org/10.1177/2167696819830484.

Shikata, Notoh, Shinohara, Yabuwaki, Ishii, Yamada, & Taylor. (2021). An examination of the psychometric properties of the occupational identity questionnaire for community-living elderly who require care. *Hong Kong Journal of Occupational Therapy*, 34(1), 30-38. https://doi.org/10.1177/1569186121997936.

Shorman, Jubori, & Soltan. (2024). Employability Skills in Computer Science, Interior Design, and Graphic Design. 2024 ASU International Conference in Emerging Technologies for Sustainability and Intelligent Systems (ICETSIS), 375-380. https://doi.org/10.1109/ICETSIS61505.2024.10459373.

Shougen, Lin, Haina, & Feiyan. (2023). Association between professional identity and humanistic caring ability in Chinese nursing students: a cross-sectional study in Changsha, Hunan, China. *Cogent Education*, 10(1), 2205341. https://doi.org/10.1080/2331186X.2023.2205341.

Singh, & Pandey. (2024). Societal expectations vs social networks: An insight into the evolution of conjugal roles in modern families. *Social Networks: An Insight Into The Evolution Of Conjugal Roles In Modern Families, Educational Administration: Theory And Practice*, 30(3), 2138-2144. https://doi.org/10.53555/kuey.v30i3.2612.

Smith. (2023). " Our Branches Are the Vines That Must Bear Fruit": The Role of Parents in First-Generation Students' Career Development. *Journal of Postsecondary Student Success*, 2(3), 52-74. https://doi.org/10.33009/fsu.jpss.2.3.5.

Staller. (2021). Big enough? Sampling in qualitative inquiry. *Qualitative Social Work*, 20(3), 897-904. https://doi.org/10.1177/14733250211024516.

State Council of the People's Republic of China. (2021). State Council of the People's Republic of China. https://www.gov.cn/zhengce/content/2022-02/21/content_5674844.htm.

Stets, & Burke. (2005). New directions in identity control theory. In Social identification in groups (Vol. 22, pp. 43-64). Emerald Group Publishing Limited. https://doi.org/10.1016/S0882-6145(05)22002-4.

Stets, & Burke. (2024). Advances in Identity Theory. In Advances In Group Processes, Volume 41 (pp. 1-27). Emerald Publishing Limited. https://doi.org/10.1108/S0882-614520240000041001.

Stryker. (1980). Symbolic interactionism: A social structural version. Benjamin Cummings Publishing Company.

Sun, McHale, & Updegraff. (2020). Career adaptivity mediates longitudinal links between parent-adolescent relationships and young adult occupational attainment. *Developmental Psychology*, 56(12), 2309-2321. https://doi.org/10.1037/dev0001120.

Sunde, Vatne, & Ytrehus. (2021). Professionals' understanding of their responsibilities in the collaboration with family caregivers of older persons with mental health problems in Norway. *Health & Social Care in the Community*, 30(4), 1325–1333. https://doi.org/10.1111/hsc.13456.

Sutopo. (2023). Unlocking the power of writing skills: insights and findings using Nvivo. Topazart.

Suzanne, Bryant, & Gavazzi. (2023). College student persistence: A focus on relationships with parents. *Journal of Family Issues*, 44(8), 2076-2095. https://doi.org/10.1177/0192513X211068920.

Swan, & Eggenberger. (2021). Early career nurses' experiences of providing family nursing care: Perceived benefits and challenges. *Journal of Family Nursing*, 27(1), 23-33. https://doi.org/10.1177/1074840720968286.

Taber. (2018). The use of Cronbach's alpha when developing and reporting research instruments in science education. *Research in science education*, 48, 1273-1296. https://doi.org/10.1007/S11165-016-9602-2.

Tajuddin, Mohamed, & Din. (2025). Influence of Family and Peers towards Youth Religious Practice and Moral Values. *International Journal of Research and Innovation in Social Science*, 9(1), 3104-3114. https://doi.org/10.47772/ijriss.2025.9010252.

Tasković, & Pedović. (2024). Adaptation and validation of the Family Influence Scale on the sample of Serbian students. *Psiholoska istrazivanja*, 27(1), 81-107. https://doi.org/10.5937/psistra27-44740.

Teixeira Reis, Terra, Dos-Santos, Nasi, Júnior, Almeida Brito, Kurimoto, & Sena. (2022). Professional identity of mental health nurses: a phenomenological study in Merleau-Ponty. *Revista Gaúcha de Enfermagem*, 43, Article e20220140. https://doi.org/10.1590/1983-1447.2022.20220140.en.

Thorne. (2022). Student Care Partnering Among Students at a HBCU: Exploring the Potential Impact on Student Persistence. *Innovation in Aging*, 6(Suppl 1), 870: 870. https://doi.org/10.1093/geroni/igac059.3108.

Tomlinson, & Jackson. (2021). Professional identity formation in contemporary higher education students. *Studies in Higher Education*, 46(4), 885-900. https://doi.org/10.1080/03075079.2019.1659763.

Tong. (2024). A Validation Study of a Self-Assessment Questionnaire for Middle School Students' Self-Presentation Skills. *Journal of Language Learning and Assessment*, 2(1), 20-23. https://doi.org/10.71194/jlla.v2i1.107.

Tuma, Rosenzweig, Chen, & Lemons. (2025). Family matters! The influence of family, peers, mentors, and professors on STEM college students motivational beliefs and career decision making. *bioRxiv*, 2025.2001.2022.633242. https://doi.org/10.1101/2025.01.22.633242.

Tyumaseva, & Orekhova. (2019). Family environment as means of preservation, strengthenings of health of students and formation of self-preservation behavior. *Vestnik of Minin University*, 7(3), 5. https://doi.org/10.26795/2307-1281-2019-7-3-5.

United Nations. (2024). World Population Prospects. United Nations. Retrieved January 30, 2025 from https://ourworldindata.org/grapher/population-by-age-group-with-projections?time=2024..latest.

United Nations Department of Economic and Social Affairs. (2023). Leaving No One Behind in an Ageing World. U. Nations. https://www.un.org/development/desa/dspd/world-social-report/2023.html.

Varadarajan, Koh, & Daniel. (2023). A systematic review of the opportunities and challenges of micro-credentials for multiple stakeholders: learners, employers, higher education institutions and government. *International Journal of Educational Technology in Higher Education*, 20(1), 13. https://doi.org/10.1186/s41239-023-00381-x.

Vautero, & Silva. (2022). A social cognitive perspective on occupational identity development in college students. *Psicologia: Reflexão e Crítica*, 35(1): 34. https://doi.org/10.1186/s41155-022-00215-1.

Vautero, Silva, & do Céu Taveira. (2021). Family influence on undergraduates' career choice implementation. *International Journal for Educational and Vocational Guidance*, 21, 551-570. https://doi.org/10.1007/s10775-020-09453-0.

Vautero, Taveira, Silva, & Fouad. (2020). Family Influence on Academic and Life Satisfaction: A Social Cognitive Perspective. *Journal of Career Development*, 48(6), 817-830. https://doi.org/10.1177/0894845320902270.

Velicer. (1988). Relation of sample size to the stability of component patterns. *Psychological Bulletin*, 103(2), 265-275. https://doi.org/10.1037/0033-2909.103.2.265.

Vessaz, Marsh, Bijoux, Gendron, & Mason-Parker. (2022). Recovery trajectories of oceanic reef ecosystems following multiple mass coral bleaching events. *Marine Biology*, 169(2), 23. https://doi.org/10.1007/s00227-021-04013-8.

Vicente, Espinosa, & Wang. (2022). The political economy of complexity: The case of cyber-communism. *Journal of Economic Behavior & Organization*, 204, 566-580. https://doi.org/10.1016/j.jebo.2022.10.009.

Walder, Bissett, Molineux, & Whiteford. (2022). Understanding professional identity in occupational therapy: A scoping review. *Scandinavian journal of occupational therapy*, 29(3), 175-197. https://doi.org/10.1080/11038128.2021.1974548.

Wanberg, van Hooft, Dossinger, Van Vianen, & Klehe. (2020). How strong is my safety net? Perceived unemployment insurance generosity and implications for job search, mental health, and reemployment. *Journal of Applied Psychology*, 105(3), 209-229. https://doi.org/10.1037/apl0000435.

Wang. (2023). Current Status and Countermeasures of Health Surveillance for the Elderly-Based on the Status of Aging in China. *Highlights in Science, Engineering and Technology*, 74, 1482-1488. https://doi.org/10.54097/gdj90t75.

Wang. (2023). Enhancing Social Adaptability of Higher Vocational Graduates for Effective Elderly Care Services in the Context of an Aging Population. *Pacific International Journal*, 6(3), 188-192. https://doi.org/10.55014/pij.v6i3.450.

Wang, Ke, & Sankaran. (2024). How Socially Sustainable Is the Institutional Care Environment in China: A Content Analysis of Media Reporting. *Buildings*, 14(9): 2953. https://doi.org/10.3390/buildings14092953.

Wang, Liu, Li, Fang, & Wang. (2024). Research on the Effect Mechanism of Career-Specific Parental Support Promoting Meaning in Life of Chinese Higher Vocational College Students. *Behavioral Sciences*, 14(12): 172. https://doi.org/10.3390/bs 14121172.

Wang, & Su. (2023). Analysis of Influencing Factors of Elderly Care Service Demand and the Supply-side Differences—Taking the Families of Staff Members of Henan University of Chinese Medicine as the Analysis Object. *Journal of Humanities, Arts and Social Science*, 7(5), 1027-1044. https://doi.org/10.26855/jhass.2023. 05.027.

Wang, & Yang. (2022). Analysis of the Impact Mechanism of Occupational Identity on Occupational Well-Being Based on Big Data. *Computational and Mathematical Methods in Medicine*, 2022, Article 4870296. https://doi.org/10.1155/2022/4870296.

Wang, Zhang, Liu, Zhou, Zhang, Tao, & Li. (2020). Research on the formation of humanistic care ability in nursing students: A structural equation approach. *Nurse Education Today*, 86, 104315; 104315. https://doi.org/10.1016/j.nedt.2019.104315.

Wang, Zhang, Lu, & Wei. (2023). Patient views of the good doctor in primary care: a qualitative study in six provinces in China. *Global Health Research and Policy*, 8(1), 24. https://doi.org/10.1186/s41256-023-00309-y.

Wasmani, Rahnama, Abdollahimohammad, Badakhsh, & Hashemi. (2022). The effect of family-centered education on the Care Burden of Family caregivers of the Elderly with Cancer: a quasi-experimental study. *Asian Pacific journal of cancer prevention: APJCP*, 23(3), 1077. https://doi.org/10.31557/APJCP.2022.23.3.1077.

Weerasombat, Pumipatyothin, & Napathorn. (2022). Understanding employability in changing labor market contexts: the case of an emerging market economy of Thailand. *Sustainability*, 14(16): 10436. https://doi.org/10.3390/su141610436.

Wen, Fang, Xie, & Ouyang. (2022). Methodological research on mediation effects in China's mainland. *Advances in Psychological Science*, 30(8), 1692–1702. https://doi.org/10.3724/SP.J.1042.2022.01692.

William. (2024). Interpretivism or constructivism: Navigating research paradigms in social science research. *International Journal of Research Publications*, 143(1), 134-138. https://doi.org/10.47119/IJRP1001431220246122.

Won, & Jang. (2020). Factors influencing elderly care willingness of nursing students. *International Journal of Advanced Culture Technology*, 8(4), 306-317. https://doi.org/10.17703/IJACT.2020.8.4.306.

Woodhall, & Shaw. (2024). How close family members contribute to the occupational experiences of their relatives with dementia in long-term residential care: An interpretative phenomenological analysis. *British Journal of Occupational Therapy*, 87(2), 89-97. https://doi.org/10.1177/03080226231201741.

Woodman, Maire, & Cook. (2024). Who is receiving financial transfers from family during young adulthood in Australia? *Journal of Sociology*, 60(2), 399-418. https://doi.org/10.1177/14407833231210956.

Wu, Dong, Bai, & Dong. (2023). The relationship between intergenerational financial support and depressive symptoms among older adults: Evidence from China Health and Retirement Longitudinal Study, 2011-2018. *Journal of Affective Disorders*, 339, 767-775. https://doi.org/10.1016/j.jad.2023.07.022.

Wu, Shao, Hu, & Zhao. (2025). The impact of physical exercise on adolescent social anxiety: the serial mediating effects of sports self-efficacy and expressive suppression. *BMC Sports Science, Medicine and Rehabilitation*, 17, 57: 57. https://doi.org/10.1186/s13102-025-01107-4.

Xiao. (2023). Demographic Transitions and Economic Consequences: An Analysis of Population Ageing in China. *Advances in Economics, Management and Political Sciences*, 2, 59-69. https://www.ewadirect.com/proceedings/aemps/article/view/2701.

Xie, Charness, Fingerman, Kaye, Kim, & Khurshid. (2020). When going digital becomes a necessity: Ensuring older adults' needs for information, services, and social inclusion during COVID-19. *Journal of Aging & Social Policy*, 32(4-5), 460–470. https://doi.org/10.1080/08959420.2020.1771237.

Xu, Wang, & Li. (2022). The impact of dependency burden on urban household health expenditure and its regional heterogeneity in China: based on quantile regression method. *Frontiers in Public Health*, 10: 876088. https://doi.org/10.3389/fpubh.2022.876088.

Yan, & Ali. (2024). The Medical-Care-Integrated Elderly Care Services Policy in China based on Policy Tools: A Content Analysis. *International Journal of Academic Research in Business and Social Sciences*, 14(6), 1-15. https://doi.org/10.6007/ijarbss/v14-i6/21769.

Yang. (2020). Construction of integrated health care and elderly care Talent training system for health care and elderly care major in higher vocational education under combination of medical treatment and endowment. In 2020 International Symposium on Advances in Informatics, Electronics and Education (ISAIEE) (pp. 231-236). IEEE.

Yao, Yu, Shen, Kang, & Wang. (2021). The role of self-efficacy in mediating between professional identity and self-reported competence among nursing students in the internship period: A quantitative study. *Nurse Education in Practice*, 57: 103252. https://doi.org/10.1016/j.nepr.2021.103252.

Yi, & George. (2000). Family dynamics of 63 million (in 1990) to more than 330 million (in 2050) elders in China. *Demographic Research*, 2: 5. https://doi.org/10.4054/DemRes.2000.2.5.

Yi, Tan, Liu, Liang, Liu, & Yin. (2022). The mechanism of cumulative ecological risk affecting college students' sense of social responsibility: the double fugue effect of belief in a just world and empathy. *International Journal of Environmental Research and Public Health*, 20(1). https://doi.org/10.3390/ijerph20010010.

Yin, Chen, & Zeng. (2020). Male student nurses need more support: Understanding the determinants and consequences of career adaptability in nursing college students. *Nurse Education Today*, 91: 104435. https://doi.org/10.1016/j.nedt.2020.104435.

Young, McLeod, & Carpenter. (2023). Examining the influence of occupational characteristics, gender and work-life balance on IT professionals' occupational satisfaction and occupational commitment. *Information Technology & People*, 36(3), 1270-1297. https://doi.org/10.1108/itp-08-2020-0572.

Yu, Wu, Xu, Chen, Tian, Wang, & Chen. (2021). Spatial Disparities and Correlated Variables of Community Care Facility Accessibility in Rural Areas of China. *Sustainability*, 13(23), Article 13400. https://doi.org/10.3390/su132313400.

Yuhuan, Pengyue, Dong, Qichao, Dong, Anqi, Hongbo, & Zhixin. (2022). The association between academic stress, social support, and self-regulatory fatigue among nursing students: a cross-sectional study based on a structural equation modelling approach. *BMC Medical Education*, 22(1): 789. https://doi.org/10.1186/s12909-022-03829-2.

Yun, Beehr, & Do. (2024). Too much information! When job resources become job demands, producing a curvilinear relationship between informational social support and creativity. *Psychology & Health*, 1-23. https://doi.org/10.1080/08870446.2024.2413362.

Zhang. (2024). Analysis on the Social Demand and Training Path of the Aged Service Talents: Take Dazhou City of Sichuan Province as An Example. *Journal of Theory and Practice of Management Science*, 4(05), 28–33. https://doi.org/10.53469/jtpms.2024.04(05).04.

Zhang, & Li. (2023). Influencing Factors of Professional Identity, Health Behavior and their Correlation with Job Burnout in Nursing Staffs in Pension Institution. *American Journal of Health Behavior*, 47: 6. https://doi.org/10.5993/ajhb.47.6.10.

Zhang, Liu, Mao, & Xiao. (2023). How is occupational identity affected by the family environment of publicly funded students in local normal colleges? A moderated mediation model. *Frontiers in Psychology*, 14: 934133. https://doi.org/10.3389/fpsyg.2023.934133.

Zhang, Shen, Guo, & Fang. (2021). Forecasting Future Demand of Nursing Staff for the Oldest-Old in China by 2025 Based on Markov Model. *International Journal of Health Policy and Management*, 11(8), 1533-1541. https://doi.org/10.34172/ijhpm.2021.63.

Zhang, Yang Liu, Zhi, & Bei. (2023). How is occupational identity affected by the family environment of publicly funded students in local normal colleges? A moderated mediation model. *Frontiers in Psychology*, 14: 934133. https://doi.org/10.3389/fpsyg.2023.934133.

Zhang, Yang, Qi, Kaminga, Huang, & Yan. (2020). Employment anxiety and its relationship with student nurse interns' social support and job-seeking efficacy: a path analysis. https://doi.org/10.21203/rs.3.rs-54145/v1.

Zhang, Zhang, & Brewer. (2023). Employability Is a Journey: Conceptualising Processual Employability as a Career Identity Emergence Process. *Education Sciences*, 13(6): 607. https://doi.org/10.3390/educsci13060607.

Zhao, Li, & Zhang. (2022). Career adaptability as a strategy to improve sustainable employment: a proactive personality perspective. *Sustainability*, 14(19), 12889. https://doi.org/10.3390/su141912889.

Zhao, & Zhao. (2022). Impacts of family environment on adolescents' academic achievement: The role of peer interaction quality and educational expectation gap. *Frontiers in Psychology*, 13, 911959. https://doi.org/10.3389/fpsyg.2022.911959.

Zhejiang Provincial Department of Natural. (2022). National Health Commission: About 45 million elderly people in China are disabled or suffer from dementia. https://zrzyt.zj.gov.cn/art/2022/11/8/art_1229668421_59008970.html.

Zhou, Cai, Thitinan, Khunanan, Wu, & Liu. (2022). Explaining the relation between perceived social support and psychological well-being among Chinese nursing students: A serial multiple mediator model involving integrative self-knowledge and self-integrity. *Psychological Reports*, 127(2), 594-619. https://doi.org/10.1177/00332941221127625.

Zhu. (2022). Spatial matching and policy-planning evaluation of urban elderly care facilities based on multi-agent simulation: Evidence from Shanghai, China. *Sustainability*, 14(23): 16183. https://doi.org/10.3390/su142316183.

Zhu, Xianhong., Hua., Xiujin., You., Lei., Qiang., & Chenchen. (2024). The association between proactive personality and interprofessional learning readiness in nursing students: the chain medication effects of perceived social support and professional identity. *Nurse Education Today*, 140: 106266. https://doi.org/10.1016/j.nedt.2024.106266.

Zou, Tang, Wang, Geng, Deng, Yu, An, Wei, Tong, & Rong. (2024). Service specification for senior care workers with traditional Chinese medicine specialty. *Science of Traditional Chinese Medicine*, 327–331. https://doi.org/10.1097/st9.0000000000000049.

APPENDIXES

APPENDIX A

Questionnaire (English Version)

Appendix A. Questionnaire (English Version)



Rattanakosin International College of Creative Entrepreneurship
Of Rajamangala University of Technology, Rattanakosin
Questionnaire on Exploring the Influence of Family Environmental Factors on the Employability of Higher Education Students Majoring in Elderly Care Management in Hubei Province, China

---

Dear students:

Hello! I am a PhD student at Rattanakosin International College of Creative Entrepreneurship in Thailand, and I am doing the research on Exploring the Influence of Family Environmental Factors on the Employability of Higher Education Students Majoring in Elderly Care Management in Hubei Province, China. Thank you for your support to participate in this survey.

This questionnaire may take you 5-20 minutes. Please answer the questionnaire based on the real situation. Your answer is important to the research of this topic.

This study guarantees that your opinions will only be used for academic research and will not be used for any other purposes. This questionnaire is anonymous, and your personal information will not be given to any individual or organization.

The answer to the questionnaire does not matter whether it is right or wrong. Please feel free to fill it out according to your actual situation. Thank you.

Section A: Basic personal information

1. Your University Name: _____

2. Your Gender:

☐ Male

☐ Female

3. Your Year of Graduation:

☐ 2024

☐ 2025

4. Your Grade Point Average (GPA):

☐ 2.1-3.0

☐ 3.1-4.0

Section B: Scales

Instructions: To what extent do you agree or disagree with these statements? Please answer every item. 1= strongly disagree, 2= disagree, 3= a little disagree, 4= neither disagree nor agree, 5= a little agree, 6= agree, 7=strongly agree.

Items	1	2	3	4	5	6	7
1. My family expects me to select a career that has a certain status.							
2. My family expects me to make career decisions so that I do not shame them.							
3. My family is only willing to support me financially if I choose a career of which they approve.							
4. My family expects that my choice of occupation will reflect their wishes.							
5. My family expects people from our culture to choose elderly care related careers.							
6. My family's career expectations for me are based on my gender.							
7. My family expects me to contribute financially to my career education and training.							
8. Because my family supports me financially, I can focus on my career development.							

Items	1	2	3	4	5	6	7
9. My family has not been able to financially support my career decisions.							
10. If I wanted to get additional education after high education, my family would provide financial support.							
11. If I were to experience a difficult career situation, my family would support me financially.							
12. My family shared information with me about how to obtain a job in the elderly care area.							
13. My family discussed career issues with me at an early age.							
14. My family showed me how to be successful in choosing a career in the elderly care area.							
15. My family showed me what was important in choosing a career in the elderly care area.							
16. Watching my family work gave me confidence in my career.							
17. My family provided guidance on which careers would be best for me.							
18. My family has given me information about obtaining education/training.							
19. My family supported me asking career-related questions.							
20. My family expects that I will consider my religion/spirituality when making career decisions.							
21. My family explained how our values and beliefs pertain to my career choices.							
22. My family expects my career to match our family's values and beliefs (refers to the set of behavioural norms, moral standards, and belief systems collectively recognised and followed by family members, such as respect for elders, honesty and integrity, and social responsibility).							

Items	1	2	3	4	5	6	7
23. When referring to my profession, I usually say “we” rather than “they”.							
24. I consider my success as the success of healthcare workers.							
25. I care very much about other people's views on my career in the elderly care area.							
26. The praise my profession from people, which is the praise they give on me.							
27. If there are some criticisms of my career from the media, I will feel ashamed and embarrassed.							
28. My job is important. /I believe in the importance of my job.							
29. I am confident in my ability at work.							
30. My job will exercise effects on elder's conditions.							
31. My job is meaningful.							
32. I have the necessary qualifications and skills for my job.							
33. I understand the responsibilities and requirements of the work.							
34. Healthcare work suits me.							
35. I know my role.							
36. I believe I could easily obtain a comparable job with another employer in the elderly care industry.							
37. I believe I could easily obtain another job that is in line with my level of education and experience in the elderly care industry.							
38. I believe I could easily obtain another job that would give me a high level of satisfaction in the elderly care industry.							

——The questionnaire is over, thank you again——

APPENDIX B

Questionnaire (Chinese Version)

Appendix B. Questionnaire (Chinese Version)



拉达那哥欣国际创意创业学院
拉加曼加拉理工大学拉达那科欣
关于影响中国湖北省老年服务与管理专业高等教育学生就业能力的家庭环境因素的问卷调查

亲爱的同学们：

你们好！我是一名博士研究生，目前正在进行一项关于家庭环境因素对中国湖北省老年服务与管理专业高等教育学生就业能力影响的研究。感谢你们支持并参与本次调查。

本问卷大约需要您花费 5 至 20 分钟。请根据真实情况作答。您的回答对本课题的研究非常重要。

本研究承诺，您所提供的意见仅用于学术研究，绝不会用于其他用途。问卷为匿名填写，您的个人信息不会被透露给任何个人或组织。

问卷没有对错之分，请您根据实际情况如实填写。再次感谢您的配合！

第一部分：基本信息

1. 你所在的大学名称：_____

2. 你的年龄：

☐ 男

☐ 女

3.你的毕业年份：

☐ 2024

☐ 2025

4.你的平均绩点 (GPA):

☐ 2.1-3.0

☐ 3.1-4.0

第二部分：维度

说明：你在多大程度上同意或不同意以下说法？

1=完全不同意，2=不同意，3=有点不同意，4=不确定，5=有点同意，6=同意，7=完全同意

题项	1	2	3	4	5	6	7
1.我的家庭希望我选择一份有一定社会地位的职业。							
2.我的家庭希望我做出的职业决定不会让他们感到丢脸。							
3.只有在我选择他们认可的职业时，我的家庭才愿意在经济上支持我。							
4.我的家庭希望我选择的职业能够体现他们的意愿。							
5.我的家庭认为我们文化背景下的人应该选择与老年护理相关的职业。							
6.我家庭对我职业的期望是基于我的性别。							
7.我的家庭希望我为自己的职业教育和培训提供经济支持。							
8. 因为我的家庭在经济上支持我，所以我可以专注于职业发展。							
9.我的家庭无法在经济上支持我做出的职业决定。							
10.如果我想在高等教育之后继续深造，我的家庭会提供经济支持。							

题项	1	2	3	4	5	6	7
11.如果我在职业发展中遇到困难，我的家庭会在经济上支持我。							
12.我的家庭向我分享了如何在老年护理领域找到工作的相关信息。							
13.我的家庭在我年幼时就开始与我讨论职业问题。							
14.我的家庭教我如何在老年护理领域成功选择职业。							
15.我的家庭让我了解在老年护理领域选择职业时应重视哪些因素。							
16.看到我的家人工作，增强了我对自己职业的信心。							
17.我的家庭为我提供了哪些职业最适合我的指导。							
18.我的家庭向我提供了关于接受教育或培训的信息。							
19.我的家庭支持我提出与职业相关的问题。							
20.我的家庭希望我在做职业决定时考虑宗教/信仰因素。							
21.我的家庭解释了我们的价值观和信念如何影响我的职业选择。							
22.我的家庭希望我的职业与我们的家庭价值观和信念相一致（指的是家庭成员普遍认同和遵循的一系列行为规范、道德标准和信仰体系，如尊重长辈、诚实守信、社会责任感等）。							
23.在谈到我的职业时，我通常会说“我们”而不是“他们”。							
24.我把自己的成功看作是养老护理工作者的成功。							
25.我非常在乎他人对我在养老护理领域职业的看法。							
26.人们对我的职业的赞扬，就是他们对我个人的赞扬。							
27.如果媒体对我的职业提出批评，我会感到羞愧和尴尬。							

题项	1	2	3	4	5	6	7
28.我的工作很重要（或我相信我的工作很重要）。							
29.我对自己在工作中的能力很有信心。							
30.我的工作会对老年人产生影响。							
31.我的工作很有意义。							
32.我具备完成工作所需的资格和技能。							
33.我了解这项工作的责任和要求。							
34.养老护理的工作适合我。							
35.我清楚自己的角色。							
36.我相信我可以轻松地在养老护理行业的另一位雇主那里找到一份类似的工作。							
37.我相信我可以轻松找到一份符合我在养老护理行业的教育水平和经验的工作。							
38.我相信我可以轻松找到一份能让我在养老护理行业中获得高度满意的工作。							

——答题完毕，请提交问卷，谢谢！——

APPENDIX C

Research Ethics Certificate

APPENDIX C. Research Ethics Certificate

Research Ethics Certificate for Research Proposal,

explanatory information document about research participants and the consent letters

R. 64 / 2025

This research proposal and the supporting documents listed below have been reviewed by the Research Ethics Committee, Mahachulalongkornrajavidyalaya University. The committee stated that this research proposal is aligned with the International Code of Ethics, national law and regulatory requirements, therefore it was appropriate to continue the research according to this proposal.

Title of Proposal: Family Environmental Factors Affecting Employability of the Higher Education Students Majoring in Elderly Care Management in Hubei Province, China

Research Proposal Code: Dissertation

Institution: Institute of Science Innovation and Culture, Rajamangala University of Technology Krungthep

Researcher: Ms. Zhao Xian

List of documents that have been reviewed:

1. Research Proposal version February 4, 2025
2. Explanatory document about research participation version February 4, 2025
3. Letter of consent to participate in the research version February 4, 2025
4. Data collection method version February 4, 2025

Ven. Assoc. Prof. Dr. Phra Panyavajarapandit

President of Research Ethics Committee

Mahachulalongkornrajavidyalaya University

March 10, 2025

Certification Number: R. 64 / 2025

Certified Date: March 10, 2025

Certificate Expiration Date: March 10, 2026

มหาวิทยาลัยมหาจุฬาลงกรณราชวิทยาลัย
๗๙ หมู่ ๑ ตำบลลำไทร อำเภอวังน้อย
จังหวัดพระนครศรีอยุธยา ๑๓๑๗๐
โทรศัพท์ ๐ ๓๕๒๔ ๘๐๐๐-๕ โทรสาร ๐ ๓๕๒๔ ๘๐๓๔
www.mcu.ac.th

Ref: MCU 8007/R.64

10th March 2024

Subject Certification of Research Ethics for Research Proposals

To Ms. Zhao Xian / The student of Rajamangala University of Technology Rattanakosin

As you have requested a research ethics certificate for the thesis research on "Family Environmental Factors Affecting Employability of the Higher Education Students Majoring in Elderly Care Management in Hubei Province, China" , at Rattanakosin International College of Creative Entrepreneurship, Rajamangala University of Technology Rattanakosin.

The Research Ethics Committee stated that this research proposal is consistent with international codes of ethics, national laws and regulations, therefore it is expedient to continue this research without amendment.

Please be informed accordingly for further arrangement.

Regards,

(Ven. Assoc. Prof. Dr. Phra Panyavajrapandit)
The Chair of Research Ethics Committee
Mahachulalongkornrajavidyalaya University

APPENDIX D

Publication of Journal during Ph.D. Study

APPENDIX D. Publication of Journal during Ph.D. Study

African Educational Research Journal
Vol. 13(2), pp. 125-135, April 2025
DOI: 10.30918/AERJ.132.25.013
ISSN: 2354-2160
Full Length Research Paper

Exploring how family environmental factors influence the employability of higher education students majoring in elderly care management in Hubei Province, China

Xian Zhao and Jirawan Deeprasert*

Rattanakosin International College of Creative Entrepreneurship, Rajamangala University of Technology Rattanakosin, Salaya, Nakhon Pathom, 73170, Thailand.

Accepted 3 April, 2025

ABSTRACT

This study is based on ecological systems theory to investigate the impact of family environment on the employability of higher education elderly care management students in Hubei Province, China. Understanding the relationships between these factors is particularly important for enhancing students' employability. This study uses qualitative research methods to conduct an in-depth interview through semi-structured questions. First, purposive sampling was used to select respondents familiar with elderly care management in Hubei Province, China, including 10 employers from elderly care institutions, 10 teachers, and 10 students along with their family members in this field, followed by snowball sampling to expand the sample size. The findings reveal that among the family environmental factors examined, financial support showed the strongest influence on employability, followed by values and beliefs, then informational support, and lastly, family expectations. Overall, this study provides valuable insights for enhancing the employability of elderly care management students in higher education institutions in Hubei Province, China.

Keywords: Higher education, employability, elderly care management students, family environment.

*Corresponding author. E-mail: jirawan.dee@rmutr.ac.th.

INTRODUCTION

The global ageing trend is becoming increasingly evident. According to the latest data, the global population aged 65 and over has reached approximately 800 million, accounting for 10.2% of the world's total population. This number is expected to double to 1.58 billion by 2050, making up more than 16% of the global population (United Nations, 2024). In China, the ageing phenomenon is even more pronounced. The seventh national census data in 2020 showed that the Chinese population aged 60 and above reached 264 million. It is projected that this number will exceed 300 million during the 14th Five-Year Plan period, which indicates that China will enter the stage of moderate aging from mild aging (Jun, 2022). By 2050, China is expected to become the country with the largest population of people aged 65 and above in the world.

Ageing population has a profound impact on society and the economy. First, it relied more on institutional care (McGarry and Grabowski, 2021). Second, it increased isolation and mental health concerns (Mushtaq and Khan, 2024). This transition heightened concerns about mental health and the need to strengthen workforce skills for evolving care demands. In the field of elderly care industry, employability is particularly crucial as the industry has evolved from providing basic daily care to offering more comprehensive and specialized services (Zou et al., 2024). Employability refers to an individual's ability to secure and maintain employment within the labor market (Donald et al., 2024). Professionals in elderly care must continually enhance their employability by improving communication skills, acquiring advanced professional knowledge, developing psychological care competencies, emergency response capabilities, and cultural sensitivity (Argyriadis et al., 2022).

As the ageing trend increases pressures on healthcare

systems, changes in family structures shrink the quality of the labour force in China, slow Chinese economic growth and reduce investment demand (Wang et al., 2022). The Chinese government has introduced a series of measures to promote the development of the elderly care industry (Li and Zhong, 2022), particularly focusing on increasing efforts to expand employment opportunities for students and strengthening the construction of elderly care institutions, which highlights the state's strong emphasis on this sector (Chen et al., 2023). Despite various efforts, the social and economic pressures brought about by China's aging population have not been effectively alleviated (Chen, 2023), as the imbalance between the supply and demand for talent in the elderly care industry remains significant (Liu et al., 2023). Concurrently, the projected demand for nursing staff ranges from 5.6 million (low estimate) to 11.5 million (high estimate). Thus, the human resource supply of long-term care is worrying" (Zhang et al., 2021). The reason for the imbalance between supply and demand for talent in the elderly care industry lies in the graduates lacking sufficient employability, which hampers their ability to meet the increasingly diverse needs of elderly care (Bao et al., 2024). Therefore, enhancing the employability of higher education students majoring in elderly care management is considered to be a crucial measure to address the imbalance between the supply and demand for talent in the elderly care industry (Liang et al., 2023).

According to ecological systems theory, which was developed by psychologist Urie Bronfenbrenner, human development is influenced by different types of environmental systems (Chen et al., 2023). It emphasizes the role of the family environment as a key factor in the development of an individual's social behavior (Dunst, 2022). Especially in the context of accelerated global aging, the direct influence of the family environment on individual behavior has become increasingly evident (Padeiro et al., 2023). Therefore, family environmental factors play an indispensable role in a student's career development, directly or indirectly influencing their employability (Koçak et al., 2021).

A previous study suggested that the family environment on individuals consists of four key variables: family expectations, financial support, informational support, values and beliefs (Tasković and Pedović, 2024). As one of the most significant background factors affecting individuals' growth and development, the family environment has a specific and essential impact on individuals' career choices (Jiang, 2022). However, few studies have explored the specific impact of family environment on employability for higher education students majoring in elderly care management. Faced with the low employability of higher education students majoring in elderly care management, it is necessary to dig deeper into the specific factors related to the family environment. To this end, the researcher plans to conduct an in-depth analysis using qualitative research methods to better identify these factors.

To summarize, the study sought to answer the following **research question:** How are the main family environmental factors influencing the employability of higher education students majoring in elderly care management? The **research objective** is as follows: To identify the main family environmental factors influencing the employability of higher education students majoring in elderly care management.

LITERATURE REVIEW

Ecological systems theory

This study applies ecological systems theory to analyze the impact of family expectations, financial support, informational support, values and beliefs on the employability of students in elderly care management.

Ecological systems theory explains how human development is influenced by different types of environmental systems. The theory implies the dynamic interactions between individuals and their environments, which are organised into nested levels (Iruka et al., 2020). Ecological systems theory posits that an individual's social environment (such as family environment, institutions, groups, community, etc.) should be viewed as a social ecosystem, emphasizing that everyone's social environment should be considered as a whole ecological system (Crawford, 2020). The theory emphasizes the role of the family environment as a key factor in the development of an individual's social behaviour. Specifically in the context of accelerated global ageing (macrosystem), the direct influence of the family environment (mesosystem) on individual behaviour (microsystem) has become increasingly evident. Previous studies analyzed family influence on individual behavior through four major areas: Family expectations, financial support, informational support, values and beliefs (Vautero et al., 2020). Existing research shows that employability is a form of positive adaptive behaviour, which includes behavioral traits such as adaptability and proactivity (Zhao et al., 2022).

Elderly care industry in China

The combination of the one-child policy and rising life expectancy has accelerated the ageing process in China (Lobanov-Rostovsky et al., 2023). By 2035, the population of those aged 65 and above is expected to be 312.88 million, making China one of the fastest-ageing countries in the world.

The concept of institutionalized elderly care still faces resistance in China, where filial piety is deeply ingrained in the culture. Many elderly individuals, particularly in rural areas, expect to be cared for by their children, as the

family-based care model remains dominant. This cultural expectation limits the acceptance of professionalized care, creating a significant gap between the demand for and supply of elderly care services (Tan et al., 2022). In order to solve the problem mentioned above, the Chinese government has taken a series of concrete measures to promote the development of elderly care services. 1) China has expanded and upgraded its healthcare infrastructure by establishing more specialized hospitals or wards for older people, equipped with facilities and personnel for the treatment of chronic illnesses, cardiovascular diseases, and cognitive impairments (Min et al., 2021). 2) At the same time, the government has increased investment in nursing homes, community care centers, and home care services, broadening the coverage of elderly care infrastructure and promoting the integration of medical and nursing care services (Zhang et al., 2021).

However, despite the various measures taken by the Chinese government, the shortage of professional talent in the elderly care industry remains critical. Data reported in the news indicates that currently, there are approximately 200,000 direct care staff in China providing services to over 2 million elderly individuals living in care institutions, with an average of around ten residents per caregiver. According to international norms, the ratio of caregivers to disabled elderly people is usually one to three. Based on this standard, China currently requires over ten million caregivers for the forty-four million disabled and semi-disabled seniors (Wang et al., 2024). The elderly care management program in higher education is specifically designed to meet the demands of an ageing society by preparing professionals to manage elderly care service institutions effectively, the primary objective is to develop versatile professionals who can thrive in healthcare settings, elderly care institutions, and related service sectors (Bladt et al., 2023).

Employability of the higher education students majoring in elderly care management

The current studies indicate that the psychological capital of students, such as self-efficacy and resilience, significantly influences their employability. Factors like family support and workload management also play crucial roles in enhancing retention and motivation in the workplace (Fu et al., 2024). The mean scores for self-perceived competency increased significantly after the course, and students with higher self-perceived competency were more interested in geriatric medicine. This suggests that improving students' perceived competencies in elderly care can enhance their employability and willingness to work in the field (Ng et al., 2021). Gender, contact experience with older adults, and volunteer experience with the elderly were significant factors influencing nursing students' attitudes toward older adults with dementia, which in turn affects their perceived preparedness and future employability in elderly care (Grey et al., 2024). Although existing literature has examined the employability of students, there are relatively few studies on the employability of higher education students majoring in elderly care management. The limited studies available mainly focus on factors like psychological attributes, knowledge, and experience, but these studies do not entirely explain the factors that affect the employability of higher education students majoring in elderly care management in the context of a family environment.

The higher education students majoring in elderly care management in Hubei province

The primary sample of this study comes from Hubei Province, which is located in the mid-region of China. According to Yang (2020), the population density of individuals aged 65 and over in Hubei Province, ranges from 0.26 to 29.87 people (per 10,000 m^2).

Hubei has a population of 58.44 million at the end of 2022, with 9.75 million of the population aged 65 and above. The percentage of the population over 65 in Hubei Province is 16.69%, which is the top 1 among the mid-region of China, highlighting the significant ageing trend (National Bureau of Statistics of China, 2023). Hubei Province is the first province in the mid-region of China to establish higher education programs in elderly care management. Hubei Province has 134 higher education universities, and its educational resources rank among the top ten in China, with an enrollment of 555,794 students and around 470,661 graduates by the end of 2022 (Hubei Provincial Bureau of Statistics, 2023).

RESEARCH METHOD

While quantitative research primarily examines whether a positive relationship exists between factors within the family environment and employability, qualitative research provides a more detailed and specific exploration of the key elements that shape elderly care management students' employability and the mechanisms through which these factors exert their influence (Lim, 2024). Therefore, this study employs qualitative research methods to conduct an in-depth analysis, integrating multiple perspectives from interviews to explore how the family environment influences factors affecting the employability of higher education students majoring in elderly care management.

Unit of analysis

There were a total of thirty respondents for the interview as follows:

1. Ten employers in the elderly care industry,
2. Ten graduates (2024-2025) majoring in elderly care management and corresponding family members,
3. Ten teachers of elderly care management.

Sampling method

In this study, purposive sampling was used to initially screen respondents familiar with elderly care management, including five employers from elderly care institutions, five teachers, and five students along with their corresponding family members in this field. The goal was to analyze the influence factors of employability of elderly care management students, specifically examining how the family environment influences their employability.

After selecting the initial fifteen respondents, snowball sampling was used to further expand the sample to thirty. The initial participants were asked to recommend others with relevant expertise in elderly care management, leading to the inclusion of an additional fifteen participants (five employers, five teachers, and five students along with their corresponding family members). This approach allowed for a broader range of perspectives while ensuring that the sample remained relevant to the study's focus (Akkaş and Meydan, 2024).

Research tools

Jones and Arminio (2021) argue that qualitative research is well-suited for exploring complex issues and requires considering the problem from multiple perspectives. According to Aguilera et al. (2024), stakeholders are all individuals and groups that influence the achievement of an organization's goals. Data triangulation will help this study establish the stakeholders involved in qualitative research. Therefore, solutions to the research problem must be found from a multi-stakeholder perspective.

This study utilized a semi-structured interview method for data collection. The respondents' interview questions aim to reflect the characteristics of three respondent identities (employers, teachers, and students with their families). Each respondent group answered a total of ten questions covering: (1) the employability skills required in the elderly care industry, (2) the family environment of elderly care management graduates (2024–2025), and (3) the relationship between family environment and students' employability, as perceived by the three parties.

Data collection method

The researcher conducted semi-structured interviews with thirty participants, each lasting 35 to 50 minutes. With the consent of the participants, audio recordings were made. Additionally, the researcher employed both online (network teleconference) and offline (face-to-face) methods for the interviews. Eleven respondents (two employers, four students and their corresponding family members, and five teachers) were interviewed face-to-face, while the remaining nineteen respondents (eight employers, six students and their corresponding family members, and five teachers) were interviewed via web video.

Data analysis

To analyze the relatively inaccurate and scattered information from informants that appeared to be relevant to the study, the researcher used the licensed software NVIVO 14, introduced by QSR International, to aid in analyzing the collected interview data.

Step 1: Created a new project in NVIVO.
Step 2: Imported the data into the NVIVO system.
Step 3: Analyzed the data using three coding levels: open, axial, and selective.

At the end of coding, the item model analysis tool in NVIVO was used to present a macro picture of the nodes. Subsequently, a micro-level description of each node was provided to explain these factors in more detail.

RESULTS

Descriptive statistics of respondents

The detailed information on respondents in this study is presented in Table 1.

Open coding analysis

Open coding is the initial phase of data analysis, where concepts, attributes, and categories discovered in the data are gradually refined and defined. In this study, manual coding was used to process the data. Textual data was analyzed sentence by sentence, extracting accurate and valuable concepts and further categorizing them into categories. Effective concepts are key ideas extracted from data that capture underlying themes, while sub-scopes in open coding analysis are more specific aspects that help categorize these concepts (Kiely and Hartman, 2023). For example, an effective concept derived from representative statements is "gender suitability in specific roles", the corresponding sub-scope in open coding analysis is "Gender-Job Fit". Through careful and iterative comparative analysis, 41 effective concepts and 23 scopes were identified. In the next stage, the upper main scope will be identified through axial coding analysis to explore broader patterns and relationships.

Table 1. Code for employers, teachers, students and corresponding family members.

Elderly care institutions ***(Selected employers from)***	**Employer code**	**High-education institutions offering elderly care management majors in Hubei** ***(Selected teachers, students and corresponding family members from)***	**Teacher code**	**Student and corresponding family member code**
1. Social Welfare Institution of Wuhan	E1	1. Hubei College of Chinese Medicine	T1	SF1
2. Taikang Elderly Care Institution of Wuhan	E2	2. Hubei Polytechnic Institute	T2	SF2
3. Social Welfare Social Welfare Institution of Wuhan Hanyang District	E3	3. Science and Technology College of Hubei University of Arts and Science	T3	SF3
4. Social Welfare Social Welfare Institution of Wuhan Jianghan District	E4	4. Hubei Health Vocational College	T4	SF4
5. Social Welfare Institution of Xiaogan	E5	5. Hubei Three Gorges Polytechnic	T5	SF5
6. Social Welfare Institution of Huangshi	E6	6. Xianning Vocational Technical College	T6	SF6
7. Sunshine Welfare Institution of Guangshui	E7	7. Wuhan Social Work Professional College	T7	SF7
8. Zhaoshang Guanyi Elderly Care Institution of Wuhan Hanyang District	E8	8. Huanggang Polytechnic College	T8	SF8
9. Social Welfare Institution of Jiangling	E9	9. Ezhou Polytechnic	T9	SF9
10. Elderly Care Service Center of Wuhan Qiaokou District Yijia Street	E10	10. Huanggang Vocational College of Science and Technology	T10	SF10

Axial coding analysis

The categories derived from open coding are relatively independent, with their internal relationships yet to be established. Axial coding builds upon the concepts and categories identified during open coding, using the initially formed categories as a central axis to identify and establish connections between them (Al-Eisawi, 2022). Simultaneously, through iterative comparative analysis of the original data, key categories are selected. In the axial coding process of this study, 12 main scopes were extracted from the 23 sub-scopes in the open coding process. Please refer to Table 2 for the axis coding results.

Selective coding analysis

Selective coding aims to identify the "core categories" from the main categories and develop "storylines" (Al-Eisawi, 2022), thus leading to identify main family environmental factors influencing the employability of elderly care management students. This study has identified 12 main categories through axial coding. To ensure comprehensive conceptual coverage, five additional original statements from respondents were analyzed after completing the initial coding. No new significant concepts emerged, and core concepts repeatedly appeared, indicating that theoretical saturation was achieved. The final coding results of this study are shown in Table 3.

Relationship between family environmental factors and employability

The coding system software showed that the main family environmental factors influencing employability of the higher education students majoring in elderly care management are family expectation, financial support, informational support, values and beliefs respectively. Further analysis of the interview text revealed that:

1. Among the family environmental factors examined, financial support showed the strongest influence on employability. There were a total of eighteen respondents involved in family financial support. This is because family financial support enables elderly care management students to focus on internships, participate in professional caregiving training, and concentrate on job-seeking activities without worrying about immediate livelihood or job-search-related costs. This economic stability helps them adopt a more strategic approach to elderly care career planning, allowing them to better prepare for employment (Hailu et al., 2024).

Table 2. Axial coding.

Main scope	Sub-scope	Scope connotation
1. Career choice expectation	Gender-job fit	Gender aligns with elderly care management job requirements or workplace equality policies.
	Age-job fit	Age is appropriate for elderly care management job demands and opportunities.
	Personality-job fit	Personality traits suit the elderly care management job's nature and environment.
2. Elderly care responsibility expectations	Companionship and emotional support	What family members believe is essential for the orderly's daily life.
	Medical and health care	
3. Family-work balance expectation	Time balance	Balancing work deadlines while ensuring quality family time.
	Role conflict management	Effectively manage conflicts between work and family roles to avoid stress from role overlap.
4. Parental educational investment	Parental educational investment	Expenditures on tuition, learning materials and other resources that support elderly care management student's academic success.
5. Family living assistance	Family living assistance	Support provided to meet elderly care management student's basic living needs, including food, clothing, housing, and transportation.
6. Investment in professional skills	Soft skills investment	E.g., teamwork skills, communication skills, problem-solving skills, and job responsibility
	Hard skills investment	E.g., mastery of geriatric nursing techniques, operation of assistive devices, emergency response skills.
7. Industry trend sharing	Market dynamics and innovations	Sharing the latest developments in elderly care market demand, emerging technologies, and industry innovations.
	Policy and regulatory updates	Providing information on new elderly care policies, regulations, and their potential impact on the industry.
	Practices and competitive insights	Sharing successful elderly care industry cases, operational strategies, and competitive analysis.
8. Family social capital	Professional exchange channel	Professional knowledge or skills accumulated by family members in elderly care fields (such as hospital care or community services).
	Social relationship network	Family connections within the elderly care industry chain (such as relatives working in elderly care institutions).
	Opportunity access	Relying on family-based implicit social capital (such as internal referrals), individuals can gain priority access to internships.
9. Professional development planning	Professional development planning	Setting career goals and taking proactive steps to succeed by planning ahead and exploring diverse career paths in the elderly care industry.
10. Social responsibility	Economic responsibility	Reducing the economic burden on families and society while promoting the healthy development of the "Silver Economy".
	Ethical responsibility	Respecting the dignity and rights of the elderly, upholding fair care, professional ethics, and human-centered elder care environment.
11. Values of filial piety	Filial piety	Being respectful and dutiful toward one's parents.
12. Inter-generational value transmission	Cultural and traditional transmission	To transmit and learn the customs, language, and festive rituals of the elderly.
	Life wisdom transmission	To transmit the life experiences, practical wisdom, and other non-material values of the elderly.

Table 3. Results of selective coding process.

Coding	Axial coding	Respondent count			Total	Rank
		E	T	SF		
Family expectation	1. Career choice expectation	5	2	1	12	4
	2. Elderly care responsibility expectations	1	0	1		
	3. Family-work balance expectation	1	1	0		
Financial support	1. Parental educational investment	1	1	4	18	1
	2. Family living assistance	2	3	3		
	3. Investment on professional skills	2	1	1		
Informational support	1. Industry trend sharing	2	2	2	13	3
	2. Family social capital and networking	0	0	3		
	3. Professional development planning	0	2	2		
Values and beliefs	1. Social responsibility	2	2	3	15	2
	2. Values of filial piety	1	2	1		
	3. Inter-generational value transmission	1	1	2		

Notes: E = Employer; T = Teacher; SF = Student and corresponding family. Respondent count = frequency of axial coding scope references made by 10 employers, 10 teachers, and 10 students with corresponding family members) across the 10-question interview.

> ***E3***: *We have found that students without financial pressure are more willing to invest time in additional aged care training and workshops. Such candidates adapt more quickly after being hired and demonstrate stronger practical skills in elderly care services.*
> ***T9***: *Financial support allows students to choose higher-quality aged care internship placements rather than settling for any opportunity just to cover living expenses. This is crucial for enhancing their professional competence and making informed career choices in elderly care.*
> ***SF2***: *If it weren't for my family's support, I would have to work several jobs to make a living, leaving no time for internships in aged care, let alone preparing for interviews in this field.*

2. Values and beliefs ranked second among the examined family environmental factors impacting employability. There were a total of fifteen respondents involved in family values and beliefs. The interviews revealed that the values and beliefs within families in this study include social responsibility, values of filial piety, and inter-generational value transmission, which are shaped by the students' family environment. For higher education students, who have received advanced education and developed independent perspectives on life and values, the integration of family values and beliefs with higher education has a more pronounced intrinsic impact on their employability (Li and Zhong, 2022). This influence has gradually raised values and beliefs to become the second most significant factor affecting their employability, following financial support from the family.

> ***E7***: *Understanding and practicing filial piety is crucial in our caregiving environment. This not only enhances the quality of care provided but also fosters a deeper emotional connection between caregivers and the elderly, promoting a more compassionate and respectful atmosphere.*
> ***T4***: *We emphasize the importance of social responsibility, including economic and ethical responsibilities, in our curriculum. By integrating these principles into our teaching, we aim to prepare students to make informed decisions that benefit both the elderly and the broader community, ensuring sustainable and ethical practices in elderly care.*
> ***SF9***: *As a student, I believe ethical responsibility is a key to building trust in elderly care institutions. Demonstrating ethical responsibility not only strengthens the reputation of care institutions but also ensures that the elderly receive dignified and respectful treatment, which is fundamental to their well-being.*

3. Informational support ranked third among the examined family environmental factors in impacting employability. There were a total of thirteen respondents

involved in family informational support. The interviews revealed that family information support plays a crucial role in the employability development of students majoring in elderly care. As the elderly care industry evolves rapidly and technological requirements continue to advance, staying updated with the latest information in a timely manner is essential. This not only helps students adapt to industry changes but also enables them to better cope with the employment challenges brought by an aging society.

> ***E8***: *Keeping up with market dynamics and innovations is crucial for elderly care professionals. We prioritize employees who can adapt to emerging technologies and industry shifts.*
> ***T6***: *Students with family ties in the industry often benefit from better resource coordination. We encourage them to leverage these networks for professional growth.*
> ***SF3***: *Having a family member in the elderly care field has helped me gain insights and networking opportunities. Their guidance has been crucial in securing internships and job referrals.*

4. Family expectations ranked fourth among the examined family environmental factors impacting employability. There were a total of twelve respondents involved in family expectations. Insights from interviews reveal that although family expectations impact employability, their influence is relatively less significant compared to other three family factors- financial support, value and beliefs, and information support, due to their higher education. Higher education fosters independence and critical thinking skills, equipping students to make more autonomous decisions (Golden, 2023). In contrast, students without higher education show greater susceptibility to family influence, as they often rely more on family guidance when making career decisions.

> ***E5:*** *Family expectations are a double-edged sword. They can motivate students to prepare thoroughly, but I've also seen some students apply hastily, clearly without seriously considering whether elderly care is truly suitable for them.*
> ***T1:*** *Some students may quickly dive into job-seeking within the elderly care industry due to family expectations, but problems arise when they lack genuine interest in the field.*
> ***SF4:*** *I know my family means well, but sometimes it feels like I'm living for them rather than myself. I chose elderly care management because it's 'practical,' but I often wonder if there are other possibilities out there.*

DISCUSSION AND CONCLUSION

Discussion of research results

This research found that, among the examined family environmental factors, financial support demonstrated the strongest direct effect on employability. It was followed by values and beliefs, informational support, and finally family expectations.

1. Family financial support significantly influences the employability of elderly care management students through parental educational investment, family living assistance, and investment in professional skills. This empirical evidence supports the views of previous researchers. Dynarski et al. (2023) pointed out that financial support from parents, such as covering tuition fees and purchasing educational resources, enables students to focus on their studies without being burdened by financial stress. This support is particularly crucial for students involved in elderly care management, as it allows them to manage caregiving responsibilities while maintaining their academic performance. Additionally, Moores and Burgess (2022) emphasized that students from low-income households benefit significantly from parental educational investment, which improves retention rates and academic outcomes, further enhancing employability. Pivoriūtė (2024) found that for some Lithuanian young adults, financial support from parents conflicted with their desired career paths and raised fears of having to pursue undesirable jobs to achieve independence. This dependence, coupled with uncertainty, may undermine their confidence and sense of autonomy in career development. This different opinion may stem from varying socio-cultural contexts. In China, family financial support is often viewed as a shared family investment, especially for students in elder care programs where early career returns may be limited. It allows them to focus on developing skills and gaining experience, thereby enhancing employability. In contrast, research from Lithuania shows that continued financial dependence can clash with the pursuit of independence, potentially weakening young adults' confidence in building meaningful careers.

2. Family values and beliefs significantly influence the employability of elderly care management students through social responsibility, values of filial piety, and inter-generational value transmission. This empirical evidence supports the views of previous researchers. Yi et al. (2022) pointed out that family environments that foster values of justice and empathy significantly contribute to the development of a strong sense of social responsibility among college students. Fonseca et al. (2019) noted that

students who engage in socially responsible activities during their academic years develop stronger professional skills and a deeper commitment to elderly care, improving their employability prospects. In contract, Ng et al. (2022) indicated that extrinsic work values did not predict external employability. This divergence primarily stems from Ng et al. (2022) examining employability in general workplace settings, while this study specifically focuses on elderly care- a highly ethics-driven field where altruistic values and social responsibility (often instilled through family upbringing) serve as key employer evaluation criteria. Additionally, Ng et al.'s study measured external employability through market-oriented competitive indicators (e.g., job-position fit), whereas the elderly care industry emphasizes value congruence -an implicit employability factor reflecting alignment with professional values and beliefs.

3. Family informational support significantly influences the employability of elderly care management students through industry trend sharing, family social capital, and professional development planning. This empirical evidence supports the views of previous researchers. Especially, Hofer et al. (2020) pointed out that merely providing access to career and labor market information is not sufficient; students, particularly those with limited prior exposure to career planning, may struggle to interpret and apply complex information without additional guidance from either parents or career professionals. Li and Zhong (2022) pointed out that families with better access to information about employment opportunities and market developments are able to provide valuable advice to students, thus enhancing their readiness for the job market. Baik et al. (2024) pointed out that social capital derived from family networks was positively associated with formal volunteering among caregivers, which enhances employability by providing practical experience and community engagement. Han and Zhang (2023) pointed out that parental career support, including verbal encouragement and information about career pathways, has a significant positive influence on students' career adaptability. However, Prasetya and Soetjipto (2023) found that family support had a positive and significant impact on burnout, which in turn increased job stress. This suggests that in this context, family information support did not function as a protective factor enhancing job performance or capability, but rather contributed to emotional exhaustion, potentially undermining employment-related functioning. The differing findings stem from variations in study context and target groups. For Chinese elder care students, family informational support - such as advice on industry trends and career planning - helps them stay aligned with evolving industry demands and continuously upgrade their professional skills. In contrast, the study of Prasetya and Soetjipto focuses on 641 female employees at Tunas Artha Mandiri in Indonesian, where family support is shaped by traditional norms that emphasize women's domestic responsibilities, making such support more emotionally oriented and less focused on professional growth.

4. Family expectation significantly influences the employability of elderly care management students through career choice expectations, elderly care responsibility expectations and family-work balance expectations. This empirical evidence supports the views of previous researchers. Hadiyati and Astuti (2023) pointed out that family expectations, along with personality and interests, guide students toward specific career paths, ultimately affecting their employability. Medeiros et al. (2022) emphasized that individuals with strong family support and clear expectations of balancing work and caregiving are better able to navigate these dual responsibilities, improving their employability in caregiving fields. The effect of work-family balance, specifically work-to-family conflict, on job satisfaction was stronger among women than among men. Whereas, Young et al. (2022) indicated that work-life balance did not have a significant main effect on occupational satisfaction in the information technology area. This inconsistency may also be related to differences in work-life balance expectations and norms across professions, with the elderly care industry placing greater emphasis on emotional labor and caregiving responsibilities, while the IT sector often values flexibility, innovation, and project-based outcomes.

Implications to ecological systems theory

This study applies ecological systems theory to provide a theoretical foundation for the relationship between family environmental factors (family expectations, financial support, informational support, and family values and beliefs) and the employability of elderly care management students in higher education. The qualitative research results identify the main family environmental factors influencing the employability of elderly care management students, these findings provide practical support and evidence for the application of ecological systems theory in the field of elderly care management education.

Implication to stakeholders

This study can serve as a valuable reference for elderly care management-related university administrators, teachers, parents, students, and employers. University administrators can develop strategies to enhance educational outcomes by understanding the influence of family environment on student career motivation and performance. Teachers can better recognize family factors that influence students' career choices and provide tailored guidance. Students and their families can benefit from

understanding how family factors interact with career development in this growing sector. Employers can use these insights to recruit candidates whose family backgrounds support career development in the elderly care area, reducing turnover and training costs.

Limitations

This study aims to explore the family environmental factors influencing the employability of elderly care management students in Hubei, since all participants were drawn from elderly care programs in Hubei, the findings may not fully reflect the perspectives of students and stakeholders in other regions. This geographical limitation particularly impacts the study's external validity, as Hubei's unique socioeconomic characteristics and the present condition of its elderly care industry may not be representative of other provinces or countries.

Conflict of interest

The authors declare that the research was conducted in the absence of any commercial or financial relationships that could be construed as a potential conflict of interest.

REFERENCES

Aguilera, R. V., De Massis, A., Fini, R., and Vismara, S. (2024). Organizational goals, outcomes, and the assessment of performance: reconceptualizing success in management studies. *Journal of Management Studies*, *61*(1), 1-36. https://doi.org/10.3390/ijerph191811282

Akkaş, H., and Meydan, C. H. (2024). Sampling methods in qualitative sampling in multicultural settings. In *Principles of conducting qualitative research in multicultural settings* (pp. 34-55). IGI Global. https://doi.org/10.4018/979-8-3693-3306-8.ch003

Al-Eisawi, D. (2022). A design framework for novice using grounded theory methodology and coding in qualitative research: Organisational absorptive capacity and knowledge management. *International Journal of Qualitative Methods*, *21*, 1-13. https://doi.org/10.1177/16094069221113551

Argyriadis, A., Patelarou, E., Paoullis, P., Patelarou, A., Dimitrakopoulos, I., Zisi, V., Northway, R., Gourni, M., Asimakopoulou, E., and Katsarou, D. (2022). Self-assessment of health professionals' cultural competence: Knowledge, skills, and mental health concepts for optimal health care. *International Journal of Environmental Research and Public Health*, *19*(18), 11282. https://doi.org/10.3390/ijerph191811282

Baik, S., Crittenden, J., and Coleman, R. (2024). Social capital and formal volunteering among family and unpaid caregivers of older adults. *Research on Aging*, *46*(2), 127-138. https://doi.org/10.1177/01640275231202260

Bao, M., Ma, R., and Chao, J. (2024). Research on the supply and demand of elderly care service resources in China. *Public Health Nursing*, *41*(5), 1082-1088. https://doi.org/10.1111/phn.13342

Bladt, M., Fuino, M., Shemendyuk, A., and Wagner, J. (2023). Modelling the burden of long-term care for institutionalised elderly based on care duration and intensity. *Annals of Actuarial Science*, *17*(1), 83-117. https://doi.org/10.1017/S1748499522000136

Chen, J., Duan, Y., Zhang, Y., Zhang, X., Chu, M., Shi, Y., and Zhang, X. (2023). Self-care behavior and associated factors of nursing students with dysmenorrhea: A structural equation model. *Journal of Nursing Management*, *2023*(1), 8820772. https://doi.org/10.1155/2023/8820772

Chen, Z., and Xiong, R. (2023). Impact of China's aging population on economic development and possible solutions. *BCP Business & Management*, *38*, 897-904. https://doi.org/10.54691/bcpbm.v38i.3794

Crawford, M. (2020). Ecological Systems Theory: Exploring the Development of the Theoretical Framework as Conceived by Bronfenbrenner. *Journal of Public Health Issues and Practices*, *4*(2). https://doi.org/10.33790/jphip1100170

Donald, W. E., Baruch, Y., and Ashleigh, M. J. (2024). Construction and operationalisation of an Employability Capital Growth Model (ECGM) via a systematic literature review (2016–2022). *Studies in Higher Education*, *49*(1), 1-15. https://doi.org/10.1080/03075079.2023.2219270

Dunst, C. J. (2022). Child studies through the lens of applied family social systems theory. *Child Studies*, 1, 37-64. https://doi.org/10.21814/childstudies.4126

Dynarski, S., Page, L., and Scott-Clayton, J. (2023). Chapter 4 - College costs, financial aid, and student decisions. In E. A. Hanushek, S. Machin, & L. Woessmann (Eds.), *Handbook of the Economics of Education* (Vol. 7, pp. 227-285). Elsevier. https://doi.org/10.1016/bs.hesedu.2023.03.006

Fonseca, I., Bernate, J., Betancourt, M., Barón, B., and Cobo, J. (2019, October 28). Developing social responsibility in university students. Proceedings of the 11th International Conference on Education Technology and Computers, United States.

Fu, J.-X., Huang, L.-L., Li, X.-H., Zhao, H., and Li, R. (2024). Association between ageing knowledge and willingness to care for older adults among nursing students in China: the mediating role of attitude towards older adults. *Gerontology & Geriatrics Education*, *45*(3), 444-457. https://doi.org/10.1080/02701960.2023.2227874

Golden, B. (2023). Enabling critical thinking development in higher education through the use of a structured planning tool. *Irish Educational Studies*, *42*(4), 949-969. https://doi.org/10.1080/03323315.2023.2258497

Grey, E., Baber, F., Corbett, E., Ellis, D., Gillison, F., and Barnett, J. (2024). The use of technology to address loneliness and social isolation among older adults: the role of social care providers. *BMC Public Health*, *24*(1), 108. https://doi.org/10.1186/s12889-023-17386-w

Hadiyati, M., and Astuti, B. (2023). Student careers: What factors influence career choice? *Journal of Education Research and Evaluation, 7*, 608-614. https://doi.org/10.23887/jere.v7i4.61686

Hailu, G. N., Abdelkader, M., Meles, H. A., and Teklu, T. (2024). Understanding the support needs and challenges faced by family caregivers in the care of their older adults at home. A qualitative study. *Clinical Interventions in Aging*, 481-490. https://doi.org/10.2147/CIA.S451833

Han, Z., and Zhang, X. (2023). The influence of parental career support on career adaptability of vocational college students. *5*, 30-34. https://doi.org/10.23977/avte.2023.050506

Hofer, A.-R., Zhivkovikj, A., and Smyth, R. (2020). The role of labour market information in guiding educational and occupational choices. *OECD Education Working Papers* 229), 1-58. https://doi.org/10.2147/CIA.S451833

Hubei Provincial Bureau of Statistics (2023). Hubei Statistical Yearbook. https://tjj.hubei.gov.cn/tjsj/sjkscx/tjnj/qstjnj/index.shtml

Iruka, I. U., DeKraai, M., Walther, J., Sheridan, S. M., and Abdel-Monem, T. (2020). Examining how rural ecological contexts influence children's early learning opportunities. *Early Childhood Research Quarterly*, *52*, 15-29. https://doi.org/10.1016/j.ecresq.2019.09.005

Jiang, C. (2022). The effect of family cohesion and adaptability on career choice self-efficacy of graduates: The mediating effect of State Anxiety. *Work*, *72*(3), 979-988. https://doi.org/10.3233/WOR-210508

Jones, S. R., Torres, V., and Arminio, J. (2021). *Negotiating the complexities of qualitative research in higher education: Essential elements and issues*. Routledge. https://doi.org/10.4324/9781003090694

Jun, F. U. (2022). Research on the current characteristics and countermeasures of population aging: A case study of Linyi City. *Management Studies*, *10*(4). https://doi.org/10.17265/2328-2185/2022.04.006

Kiely, R., and Hartman, E. (2023). Qualitative research methodology and international service learning: Concepts, characteristics, methods, approaches, and best practices. In *International service learning* (pp. 291-317). Routledge. https://doi.org/10.4324/9781003445371

Koçak, O., Ak, N., Erdem, S. S., Sinan, M., Younis, M. Z., and Erdoğan, A. (2021). The role of family influence and academic satisfaction on career decision-making self-efficacy and happiness. *International Journal of Environmental Research and Public Health*, *18*(11). https://doi.org/10.3390/ijerph18115919

Li, H., and Zhong, F. (2022). Research on the Impact of Family Capital on College Students' Employment. *International Journal of New Developments in Education*, *4*(9), 15-24. https://doi.org/10.25236/ijnde.2022.040904

Liang, F., Adenan, A., Azman, M. N. A., and Kassymova, G. K. (2023). Research on the retention factors of interns majoring in elderly care service in Chinese higher vocational colleges: based on a qualitative comparative analysis method (QCA). *Perspectives of Science and Education*, *65*(5), 704-719. https://doi.org/10.32744/pse.2023.5.41

Lim, W. M. (2024). What is qualitative research? An overview and guidelines. *Australasian Marketing Journal*, 1-31. https://doi.org/10.1177/14413582241264619

Liu, Y., Chen, L., Lv, L., and Failler, P. (2023). The impact of population aging on economic growth: a case study on China. *AIMS mathematics*, *8*(5), 10468-10485. https://doi.org/10.3934/math.2023531

Lobanov-Rostovsky, S., He, Q., Chen, Y., Curry, N., Brunner, E., Liao, J., Hemmings, N., and Venkatraman, T. (2023). Growing old in China: Systematic review of long-term care insurance pilot studies. *Innovation in Aging*, *7*(Supplement_1), 196-197. https://doi.org/10.1093/geroni/igad104.0645

McGarry, B. E., and Grabowski, D. C. (2021). Nursing homes and COVID-19: a crisis on top of a crisis. *The Annals of the American Academy of Political and Social Science*, *698*(1), 137-162. https://doi.org/10.1177/00027162211061509

Medeiros, T. J., Barbosa, G. C., Alves, L. C. D. S., and Gratão, A. C. M. (2022). Work-family balance among caregivers of elderly people: A systematic review. *Cadernos Brasileiros de Terapia Ocupacional*, *30*, e3154. https://doi.org/10.1590/2526-8910.ctoar241831542

Min, L., Yichao, S., and Hailing, M. (2021, June 18). An Empirical Research on Construct and Influencing Factors of College Students' Blended Learning Power Based on SPSS 22 software and AMOS 24.0 software. 2021 2nd International Conference on Artificial Intelligence and Education (ICAIE), Dali, China.

Moores, E., and Burgess, A. P. (2023). Financial support differentially aids retention of students from households with lower incomes: a UK case study. *Studies in Higher Education*, *48*(1), 220-231. https://doi.org/10.1080/03075079.2022.2125950

Mushtaq, A., and Khan, M. A. (2024). Social isolation, loneliness, and mental health among older adults during COVID-19: a scoping review. *Journal of Gerontological Social Work*, *67*(2), 143-156. https://doi.org/10.1080/01634372.2023.2237076

National Bureau of Statistics of China (2023). China Statistical Yearbook. https://www.stats.gov.cn/sj/ndsj/2023/indexeh.htm

Ng, P. M. L., Wut, T. M., and Chan, J. K. Y. (2022). Enhancing perceived employability through work-integrated learning. *Education + Training*, *64*(4), 559-576. https://doi.org/10.1108/ET-12-2021-0476

Ng, Z. L., Mat Din, H., Zakaria, N. F., Inche Mat, L. N., Wan Zukiman, W. Z. H., Md Shah, A., Daut, U. N., and Sallehuddin, H. M. (2021). Implementation of a healthcare of elderly course with multi-professional teachers for undergraduate medical students in a public university in Malaysia: A quasi-experimental pre and post study. *Frontiers in Public Health*, *9*, 743804. https://doi.org/10.3389/fpubh.2021.743804

Padeiro, M., Santana, P., and Grant, M. (2023). Global aging and health determinants in a changing world. In *Aging* (pp. 3-30). Elsevier. https://doi.org/10.1016/B978-0-12-823761-8.00021-5

Pivoriūtė, M. (2024). *"How do I find myself, become successful, financially independent and experience the joys of youth?" Experiences of quarter-life crisis among Lithuanian students* \Vilniaus universitetas].

Prasetya, K. B. T., and Soetjipto, B. E. (2023). Burnout as mediateer of the influence of organizational support and family support on job stress at KSPPS Tunas Artha Mandiri. *Economics and Business Journal (ECBIS)*, *1*(4), 293-304. https://doi.org/10.15388/vu.thesis.597

Tan, Y., Liu, X., Sun, H., and Zeng, C. (2022). Population ageing, labour market rigidity and corporate innovation: Evidence from China. *Research Policy*, *51*(2), 104428. https://doi.org/10.1016/j.respol.2021.104428

Tasković, M., and Pedović, I. (2024). Adaptation and validation of the Family Influence Scale on the sample of Serbian students. *Psiholoska istrazivanja*, *27*(1), 81-107. https://doi.org/10.5937/psistra27-44740

United Nations (2024). World Population Prospects. United Nations. Retrieved January 30, 2025 from https://ourworldindata.org/grapher/population-by-age-group-with-projections?time=2024..latest

Vautero, J., Taveira, M. d. C., Silva, A. D., and Fouad, N. A. (2020). Family influence on academic and life satisfaction: A social cognitive perspective. *Journal of Career Development*, *48*(6), 817-830. https://doi.org/10.1177/0894845320902270

Wang, K., Ke, Y., and Sankaran, S. (2024). How socially sustainable is the institutional care environment in China: A content analysis of media reporting. *Buildings*, *14*(9), 2953. https://doi.org/10.3390/buildings14092953

Wang, S., Li, X., Liu, H., Liu, S., and Lin, X. (2022). Family social class as a predictor of college students' career decision-making self-efficacy. *Social Behavior and Personality: An International Journal*, *50*(9), 1-11. https://doi.org/10.2224/sbp.11713

Yang, L. (2020, December 17). *Construction of Integrated Health Care and Elderly Care Talent Training System for Health Care and Elderly Care Major in Higher Vocational Education under Combination of Medical Treatment and Endowment* 2020 International Symposium on Advances in Informatics, Electronics and Education (ISAIEE), Frankfurt, Germany.

Yi, Y., Tan, Q., Liu, J., Liang, F., Liu, C., and Yin, Z. (2022). The mechanism of cumulative ecological risk affecting college students' sense of social responsibility: the double fugue effect of belief in a just world and empathy. *International Journal of Environmental Research and Public Health*, *20*(1), 10. https://doi.org/10.3390/ijerph20010010

Young, D. K., McLeod, A. J., and Carpenter, D. (2023). Examining the influence of occupational characteristics, gender and work-life balance on IT professionals' occupational satisfaction and occupational commitment. *Information Technology & People*, *36*(3), 1270-1297. https://doi.org/10.1108/itp-08-2020-0572

Zhang, L., Shen, S., Guo, Y., and Fang, Y. (2021). Forecasting future demand of nursing staff for the oldest-old in China by 2025 based on Markov model. *International Journal of Health Policy and Management*. https://doi.org/10.34172/ijhpm.2021.63

Zhao, L., Li, W., and Zhang, H. (2022). Career adaptability as a strategy to improve sustainable employment: A proactive personality perspective. *Sustainability*, *14*(19), 12889. https://doi.org/10.3390/su141912889

Zou, Q., Tang, Q., Wang, L., Geng, J., Deng, B., Yu, Z., An, A., Wei, L., Tong, X., and Rong, P. (2024). Service specification for senior care workers with traditional Chinese medicine specialty. *Science of Traditional Chinese Medicine*, *2*(4), 327-331. https://doi.org/10.1097/st9.0000000000000049

Citation: Zhao, X., and Deeprasert, J. (2025). Exploring how family environmental factors influence the employability of higher education students majoring in elderly care management in Hubei Province, China. *African Educational Research Journal, 13*(2), 125-135.

VITAE

Name - Surname	Miss Xian Zhao
Date of Birth	June 12, 1986
Place of Birth	China
Address	No.1, Hangyu Road, Xiangyang City, Hubei Province, China 441000

Education Background

2021-present	Doctor Degree in Philosophy in Management Rajamanagala University of Technology Rattanakosin, Thailand
2019-2021	Master of Business Administration (MBA), Zhongnan University of Economics and Law
2005-2009	Bachelor in Business English, Hubei University of Arts and Science

Work Experience

2021-2024	Teacher and Administrator in the Department of Economics and Management, College of Science and Technology, Hubei University of Arts and Science
2019-2021	English Translator, Xiangyang Public Security Bureau
2019	Marketing Manager, Xiangyang Landport International Trade Co., Ltd.;
2011-2019	Purchasing Manager, Hubei Ali-Jiatai Aircraft Equipment Co., Ltd

Publication of Journals during Ph.D. Study

Essay 1

Zhao, Z. and Deeprasert, J. (2025). Exploring How Family Environmental Factors Influence the Employability of Higher Education Students Majoring in Elderly Care Management in Hubei Province, China. *African Educational Research Journal*, 13(2), 1245-135. https://doi.org/10.30918/AERJ.132.25.013.

Essay 2

Zhao, X., Xu, T. and Liu, X. (2025). Social Isolation and Social Media Addiction: the Serial Mediation Roles of Social Anxiety and FoMO among Chinese University Students. *Scientific Reports*, 16: 3242, 1-13. https://doi.org/10.1038/s41598-025-33176-3.